Dometic

DIAGNOSTIC SERVICE MANUAL
ROOF TOP AC/HP SYSTEMS
TROUBLESHOOTING

MECHANICAL CONTROL
COMFORT CONTROL
COMFORT CONTROL 2
SINGLE ZONE LCD CONTROL
ANALOG CONTROL

USA
Service Office
Dometic Corporation
2320 Industrial Parkway
Elkhart, IN 46516

CANADA
Dometic Corporation
46 Zatonski Unit 3
Brantford, Ontario
CANADA N3T 5L8

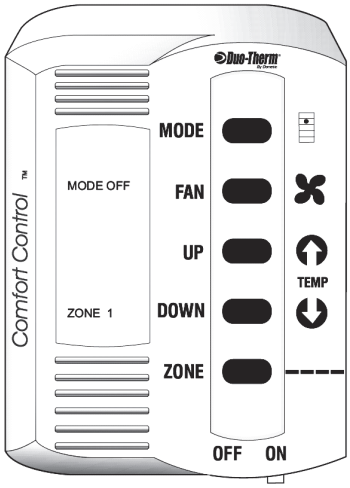

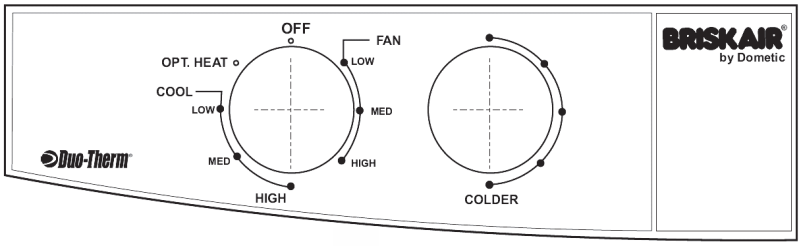

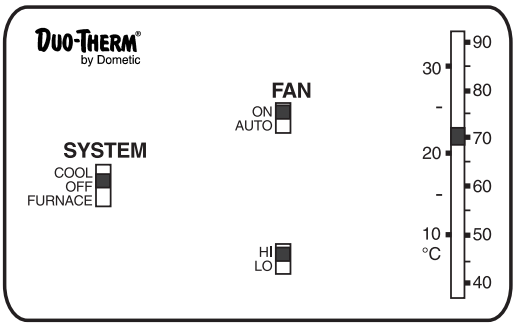

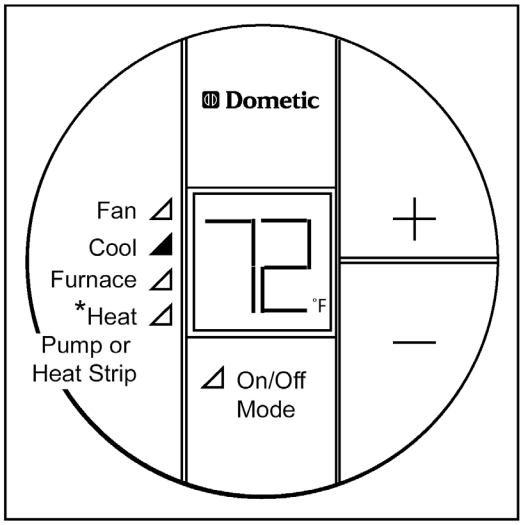

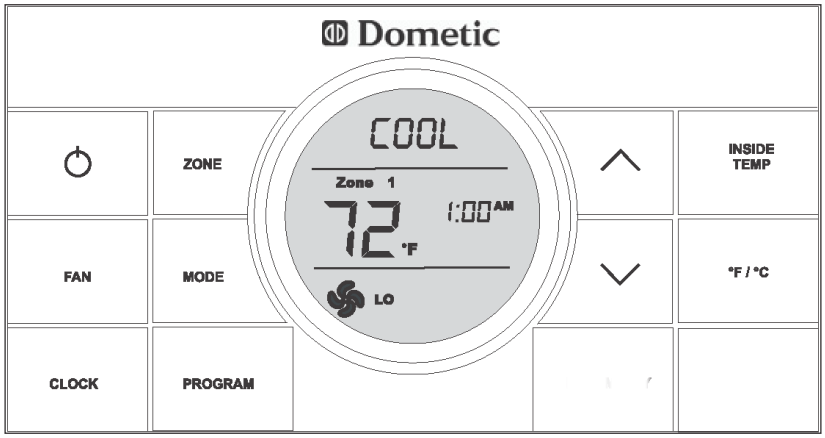

Form No. 3311071.017 01/12

©2007 Dometic Corporation

LaGrange, IN 46761

Foreword

This service manual is the result of the dedication of The Dometic Corporation Technical staff and its engineers in giving service people the necessary instruction for making accurate analyses of certain conditions. Provided is a diagnostic chart leading a qualified mechanic into the service manual pages to locate and solve symptoms which may occur. Dometic has continued its commitment in providing service people with this, the most up-to-date information about servicing Dometic RV accessories.

SAFETY INSTRUCTIONS

This manual has safety information and instructions to help users eliminate or reduce the risk of accidents and injuries.

RECOGNIZE SAFETY INFORMATION

This is the safety-alert symbol. When you see this symbol in this manual, be alert to the potential for personal injury.

Follow recommended precautions and safe operating instructions.

UNDERSTAND SIGNAL WORDS

A signal word , WARNING OR CAUTION is used with the safety-alert symbol. They give the level of risk for potential injury.

⚠ WARNING Indicates a potentially hazardous situation which, if not avoided, could result in death or serious injury.

⚠ CAUTION Indicates a potentially hazardous situation which, if not avoided may result in minor or moderate injury.

⚠ CAUTION When used without the safety alert symbol indicates, a potentially hazardous situation which, if not avoided may result in property damage.

Read and follow all safety information and instructions.

CONTENTS

PAGE NO.

Diagnostic Flow Chart 4

Section 1

Operation

1.1 Mechanical Controls 10
1.2 Analog Controls 10
1.3 Comfort Control Center 11
1.4 CCC 2 14
1.5 Single Zone LCD Control 19

Section 2

AC Power Requirements

2.1 AC Voltage 22
2.2 Breaker 22
2.3 Unit Wiring 22
2.4 Field Wiring 22-27

Section 3

DC Voltage Requirements (Electronic) 28

Section 4

Components

4.1 Mechanical Selector Switch 28
4.2 Mechanical Thermostat 28
4.3 Change Over Thermostat (59146.XXX) 29
4.4 Analog Thermostat 29
4.5 Comfort Control Thermostat 30
4.6 Ccc 2 T-STAT 31
4.7 Single Zone LCD T-stat 32
4.8 CCC & CCC2 Cable Assembly 33
4.9 Analog Power Module 33
4.10 Comfort Control Power Module 34
4.11 Single Zone LCD Power Module 35
4.12 CCC2 Power Module 37
4.13 Start Device 39
4.13.1 PTCR 39
4.13.2 Start Relay 39
4.14 Capacitors 39
4.14.1 Run Capacitors 39
4.14.2 Start Capacitors 39
4.15 Blower Motor 40
4.16 Compressor 40
4.17 Heat Strips 41
4.17.1 Heat Strip Ducted 41
4.17.2 Heat Strip ADB 41
4.18 Thermistor Temperature Sensors 42
4.18.1 Remote Temperature Sensor 42
4.18.2 Cold (freeze) Control Sensor 42
4.18.3 Ambient Temperature Sensor 43
4.19 Analog Cold (freeze) Control 43
4.20 Reversing Valve (HEAT PUMP) 43

CONTENTS

PAGE NO.

Section 5

Air Flow

5.1 User Maintenance 44
5.2 Frost on Coil 44
5.3 Recirculation, Obstructions, Restrictions 44
5.4 Air Distribution Box (ADB) 47

Section 6

Configeration 47

Section 7

Thermostat Location 49

Section 8

Other

8.1 Ambient Temperature 50
8.2 Heat Gain 50
8.3 Blower Fan/Wheel Noise 50
8.4 Water Leakage 50
8.5 Temperature Differential Across Coil 52
8.6 Amp Draw 52
8.7 Wiring 52
8.8 Short Cycle 61

Section 9

Quick Tips

9.1 Mechanical Control 62
9.2 Comfort Control 62
9.3 Analog Control 62
9.4 CCC2/Single Zone 62

PRINCIPLES OF HEAT PUMP OPERATION 63

SYMPTOM	CAUSE	PAGE #
1. Unit does not run; no fan no compressor		
Mechanical Control	Operation AC Voltage Breaker Changeover Thermostat Selector Switch Wiring	09 21 21 29 27 51
Analog Control	Operation Ambient Temperature AC Voltage DC Voltage Breaker Changeover Thermostat Analog Thermostat Analog Power Module Wiring	09 50 21 28 21 29 29 33 51
Comfort Control / CCC2	Configuration Operation Ambient Temperature AC Voltage DC Voltage Breaker Cable Assembly Freeze Sensor Ambient Sensor Remote Temperature Sensor Comfort Control Power Module / CCC2 Wiring	47 10/13 50 21 28 21 33 43 43 42 34/37 51
Single Zone LCD T-stat	Operation AC Voltage DC Voltage Breaker Single Zone LCD T-stat Single Zone LCD Power Module Wiring	18 21 27 21 32 35 51
2. Fan operates; no compressor		
Mechanical Control	Wiring Selector Switch Mechanical Thermostat Overload Compressor	51 27 24 41 40
Analog Control	Operation Wiring Analog Thermostat Analog Power Module Overload Compressor	09 51 29 33 41 40
Comfort Control / CCC2	Operation DC Voltage Wiring Cable Assembly Comfort Control Power Module / CCC2 Overload Compressor Comfort Control Thermostat / CCC2	10/13 27 51 32 34/37 41 40 29/30

SYMPTOM	CAUSE	PAGE #
2. Fan operates; no compressor		
Single Zone LCD T-stat	Operation AC Voltage Freeze Sensor Overload Compressor Single Zone LCD T-sta System Initialation	18 21 42 41 40 32 32
3. Fan Operates; compressor tries to start, cycles “OFF” and hums again, or blows circuit		
Mechanical Control	AC Voltage Start Device Start Capacitor Run Capacitor Overload Compressor	21 39 40 39 41 40
Analog Control	AC Voltage Start Device Start Capacitor Run Capacitor Overload Compressor	21 39 40 39 41 40
Comfort Control / CCC2	AC Voltage Start Device Start Capacitor Run Capacitor Overload Compressor	21 39 40 39 41 40
Single Zone LCD T-stat	AC Voltage Start Device Start Capacitor Run Capacitor Overload Compressor	21 39 40 39 41 40
4. Fan Operates: compressor runs for a short while, cycles off, cycles back on hums, blows breaker		
Mechanical Control	Operation AC Voltage Start Device Start Capacitor Run Capacitor Mechanical Thermostat Short Cycle Air Flow Obstruction Overload Compressor	09 21 39 40 39 24 61 44 41 40
Analog Control	AC Voltage Start Device Start Capacitor Run Capacitor Thermostat Location Analog Thermostat Short Cycle Air Flow Obstruction Overload Compressor	21 39 40 39 49 29 61 44 41 40

SYMPTOM	CAUSE	PAGE #
4. Fan Operates: compressor runs for a short while, cycles off, cycles back on hums, blows breaker		
Comfort Control / CCC2	AC Voltage Start Device Start Capacitor Run Capacitor Thermostat Location Comfort Control Thermostat/CCC2 Short Cycle Air Flow Obstruction Overload Compressor	21 39 40 39 49 30/31 40 44 41 40
Single Zone LCD T-stat	AC Voltage Start Device Start Capacitor Run Capacitor Thermostat Location Single Zone LCD T-stat Short Cycle Air Flow Obstruction Overload Compressor	21 39 40 39 49 32 40 44 41 40
5. Compressor run, no fan		
Mechanical Control	Wiring Selector Switch Run Capacitor Motor	51 27 39 40
Analog Control	Wiring Run Capacitor Motor Analog Thermostat/Cable Analog Power Module	51 39 39 29 33
Comfort Control / CCC2	Wiring Run Capacitor Motor Comfort Control Thermostat/CCC2 Comfort Control Power Module / CCC2	51 39 39 30/31 34/37
Single Zone LCD T-stat	Wiring Run Capacitor Motor Single Zone LCD T-stat System Initialation Single Zone Power Module	51 39 39 32 32 35
6. Compressor runs, fan runs, but on one speed only		
Mechanical Controls	Selector Switch Wiring Motor	27 51 39
Analog Control	Wiring Motor Analog Thermostat/Cable Analog Power Module	51 39 29 33
Comfort Control / CCC2	Wiring Run Capacitor Motor Comfort Control Power Module/CCC2	51 39 39 34/37

SYMPTOM	CAUSE	PAGE #
6. Compressor runs, fan runs, but on one speed only..Con't		
Single Zone LCD T-stat	Wiring Motor Single Zone LCD T-stat System Initialation Sngle Zone Power Module	51 39 32 32 35
7. Inside Coil Freezes Up`		
Mechanical Control	Operation Ambient Temperature Air Flow Mechanical Thermostat Run Capacitor Motor Amp Draw	09 50 44 24 39 39 52
Analog Control	Operation Ambient temperature Run Capacitor Analog Cold Control Motor Air Flow Thermostat Location Amp Draw Analog Thermostat/Cable Analog Power Module	09 49 39 42 39 44 49 52 29 32
Comfort Control / CCC2	Operation Ambient Temperature Run Capacitor Comfort Control Cold Control/CCC2 Motor Air Flow Thermostat Location Remote Temperature Sensor Amp Draw Comfort Control Power Module	10/13 49 39 41 39 44 49 41 52 34/37
Single Zone LCD T-stat	Operation Ambient temperature Run Capacitor Cold Control Motor Air Flow Thermostat Location Amp Draw Single Zone LCD t-stat Single Zone Power Module	18 49 39 41 39 44 49 52 32 35
8. Insufficient Cooling, compressor runs constantly : Mechanical, Analog, Comfort Control and CCC2	Air Flow Heat Gain/Loss Compressor Amp Draw	44 49 39 52

SYMPTOM	CAUSE	PAGE #
9. Unit operates in wrong mode (cool instead of heat or reversed... Con't		
Mechanical Control	Mechanical Thermostat Change Over Thermostat Wiring Reversing Valve	24 29 51 42
Analog Control	Analog Thermostat Change Over Thermostat Wiring Reversing Valve	28 29 51 42
Comfort Control / CCC2	Ambient Temperature Sensor Configuration Wiring Reversing Valve	42 46 51 42
Single Zone LCD T-stat	Ambient Temperature Sensor Wiring Reversing Valve	42 51 42/61
10. Insufficient cooling or heating; compressor cycles on and off		
Mechanical Controls	Air Flow Heat Gain/Loss Mechanical Thermostat	44 50 24
Analog Control	Air Flow Heat Gain/Loss Analog Thermostat Thermostat Location	44 50 29 48
Comfort Control / CCC2	Air Flow Heat Gain/Loss Comfort Control Thermostat /CCC2 Remote Temperature Sensor Thermostat Location	44 50 30/31 41 48
Single Zone LCD T-stat	Air Flow Heat Gain/Loss Single Zone LCD t-stat Thermostat Location	44 50 32 49
11. Excessive cooling or heating; compressor will not shut off		49
Mechanical Control	Mechanical Thermostat	24
Analog Control	Thermostat Location Analog Thermostat/Cable Analog Power Module	49 29 32
Comfort Control/CCC2	Thermostat Location Remote Temperature Sensor Comfort Control / CCC2 Power Module	49 41 34/37/61
Single Zone LCD T-stat	Thermostat Location Single Zone LCD t-stat Single Zone Power Module	49 32 35/61
12. Water Leaks; All units	Water Leakage	49

SECTION 1

Operating Instructions

The operating instructions can change from one model number to another. Be sure you are familiar with the proper operating instructions for the specific control system or model of air conditioner you are diagnosing. If not sure, acquire the proper operating instructions for the unit you are trouble shooting.

1.1 Mechanical Controls

This type of air conditioner has an air distribution box that has a mechanical selector switch and thermostat installed in it.

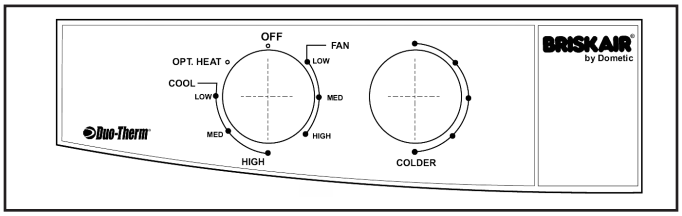

Selector Switch

The selector switch has eight positions including "OFF". This controls the fan speed, heating mode (HEAT STRIP OPTIONAL) and cooling modes.

Thermostat

The thermostat controls the temperature range from 65° F. on the coldest side to 90° F. on the warmest side. In the cooling mode, the compressors ON/OFF cycling are controlled by the thermostat setting.

COOLING OPERATION:

A. Set the thermostat at the desired temperature level.
B. Select the fan speed that best satisfies your needs:
   1. HIGH COOL: Selected when maximum cooling and dehumidification required.
   2. MED. COOL: Selected when normal or average cooling required.
   3 LOW COOL: Selected when room at desired comfort level and needs to be maintained. Normally this is speed used for night time operation.

Note: The blower runs continuously to circulate air and maintain an even temperature. The compressor will come on as cooling is required to maintain the selected temperature level.

FROST FORMATION ON COOLING COIL:

Under certain conditions, frost may form on the evaporator coil. If this should occur, inspect the filter and clean if dirty. Make sure air louvers are not obstructed and completely open. Air conditioners have a greater tendency to frost when the outside temperature is relatively low or fan run on a low speed. This may be prevented by adjusting the thermostat control knob to a warmer setting (counter clockwise). Should frosting continue, operate on LOW, MED, or HIGH FAN setting only until the cooling coil is free of frost.

AFTER SHUTTING THE AIR CONDITIONER DOWN WITH EITHER SELECTOR SWITCH OR THERMOSTAT, WAIT AT LEAST TWO (2) MINUTES BEFORE RESTARTING. THIS ALLOWS THE REFRIGERANT PRESSURE TO EQUALIZE AND COMPRESSOR TO START EASILY. FAILURE TO FOLLOW THIS INSTRUCTION MAY CAUSE CIRCUIT BREAKERS OR FUSES TO OPEN.

Heating Operation:

(With Optional Heat Kit Installed)

Note: This electric heater will not replace a furnace for heating the RV in cold weather. The intent is to remove the chill on cool days or mornings. The temperature rise across the heat strip should be 5° to 7° degrees. If the temperature in the coach is 50° degrees the temp coming out of the unit will be approximately 55° to 57°. On the hand this will feel cool and the user may not think the unit is working.

A. Turn the selector switch to "OPT. HEAT".
B. The heater will come on and begin heating.
C. When desired temperature level in RV is reached, move the selector switch to off position or fan position.

Note: Thermostat does not control heater ON/OFF cycle.

Fan Operation

This will circulate the air in your RV without cooling or heating. There are three positions: HIGH FAN, MED FAN or LOW FAN to select from, depending upon personal choice. "OFF" POSITION: This is to turn unit off.

1.2 Analog Control System

This type of air conditioner controls can be ducted or have an air distribution box with wall T-Stat.

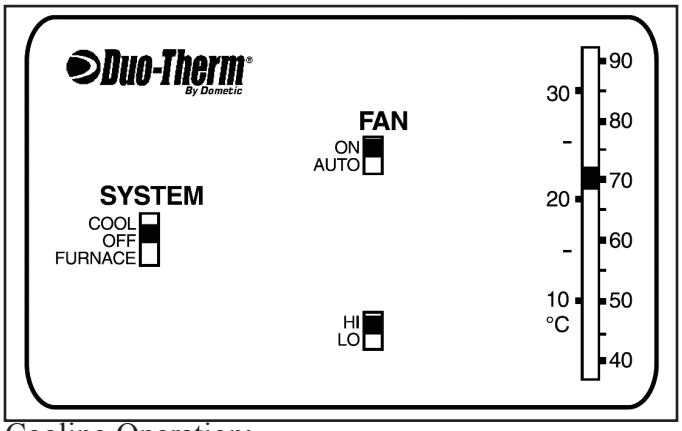

Cooling Operation:

A. Place the Temperature Set Lever to the desired temperature level (located at right side of thermostat).
B. Select fan speed that best satisfies your needs (switch located at lower center of thermostat).

• High Speed: Selected when the maximum cooling and dehumidification are required.
• Low Speed: Selected when RV reaches desired comfort level and needs to be maintained. Normally this speed is used for nighttime operation

C. Select Auto/On Switch operation as follows: (switch located at upper center of thermostat)

• Auto Position: Air Conditioner fan runs whenever cooling is required and stops whenever cooling is not required. (I.E.: Temperature set point reached)
• ON Position: The fan will run continuously. The compressor will turn ON and OFF to maintain set temperature.

D. Set the System Switch to cool position (located at the left side of the thermostat). The air conditioner compressor will now come on when cooling is required and cycle off when the temperature level selected is reached.

Wait at least two (2) minutes before restarting the air conditioner after shutting off with either the system switch or the temperature set lever. This allows the refrigerant pressure in the air conditioner to equalize and will allow the compressor to restart easily. Failure to follow this instruction may cause circuit breakers or fuses to open. The analog system does not have a built in time delay.

Furnace Operation:

(If Furnace is connected to control system)

A. Set the Temperature Set Lever to desired temperature level (located on the right of thermostat).
B. Set the System Switch to furnace position (located on the left side of thermostat). The furnace will now come on when heat is required and cycle off when the temperature level selected is reached.

Special Feature:

When thermostat:

A. Switch: is in the COOL, OFF or FURNACE position and
B. Auto/On Switch: is in the ON position, the air conditioner fan will run continuously at selected fan speed to circulate the air inside the RV.

Optional Feature:

Electric Heat Strip (If Unit so Equipped)

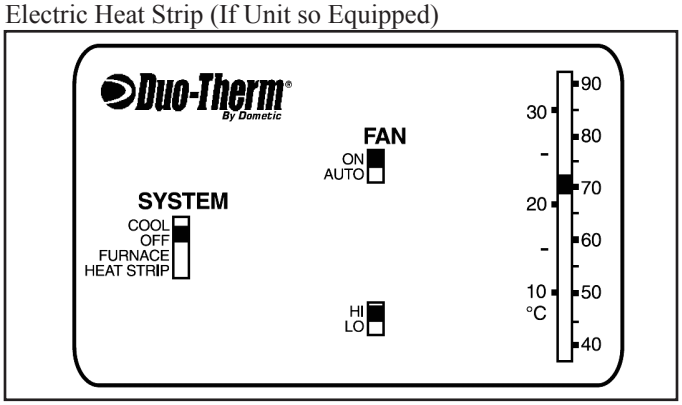

A. Set the Temperature Set Lever (located at right of thermostat) to desired temperature level.
B. Set the System Switch (located at left side of thermostat) to heat strip position. The unit's heat strip will now come "ON" and cycle "OFF" when the temperature level selected is reached.
C. Move the FAN Auto/On Switch
   1. Auto Position: Unit fan runs whenever heat is required and stops whenever heating is not required.
   2. ON Position: Unit fan runs continuously to circulate air in RV.

The temperature rise across the heat strip should be 5° to 7° degrees. If the temperature in the coach is 50 degrees the temperature coming out of the unit will be approximately 55° to 57°. On the hand this will feel cool and the user may not think the unit is working.

Heat Pump Operation

Note: The outside thermostat (change-over thermostat) will not allow the heat pump to operate when outside temperatures are below 40° (+/-2) Fahrenheit.

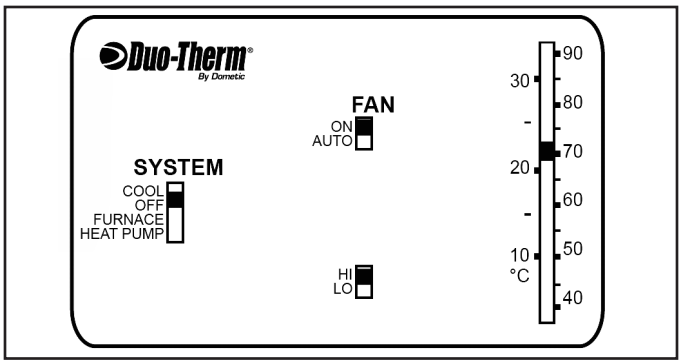

A. Set the Temperature Set Lever (located on the right of thermostat) to desired temperature level.
B. Set the System Switch (located at the left side of thermostat) to heat pump position. The compressor will now come on when heating is required and cycle off when the temperature level selected is reached. If the outside temperature is below 40° (+/-2) Fahrenheit, the heat pump will not operate. If the RV is equipped with a furnace the System Switch must be set to furnace for operation.

Frost Prevention

Heat pumps have a tendency to frost during operation when the outside temperature is below 50° Fahrenheit with moderate humidity conditions. It may be necessary to reverse the refrigerant cycle (switch to cooling mode) to clear frost off the outside coil.

1.3 Comfort Control

This type of air conditioner controls can be ducted or have an air distribution box with wall T-Stat. The Comfort Control Center has been designed for you to easily operate all the air conditioning and heating appliances found in your vehicle from one location. In order to familiarize you with the operation of the Comfort Control Center, the following diagram along with the accompanying text will explain all the functional characteristics of the system.

Controls

A. Liquid Crystal Display

The Comfort Control Center is equipped with a liquid crystal display (LCD) that identifies the mode of operation, the temperature set-point, the zone identification and the fan speed. The Comfort Control Center is designed to accept and control many varied air conditioning and heating appliances. When you begin to first operate the Comfort Control Center, you will see that the LCD readout will only show the options available based on the appliances installed on the vehicle.

An incandescent light will illuminate the LCD area when a selector button is pushed for easy reading at all times.

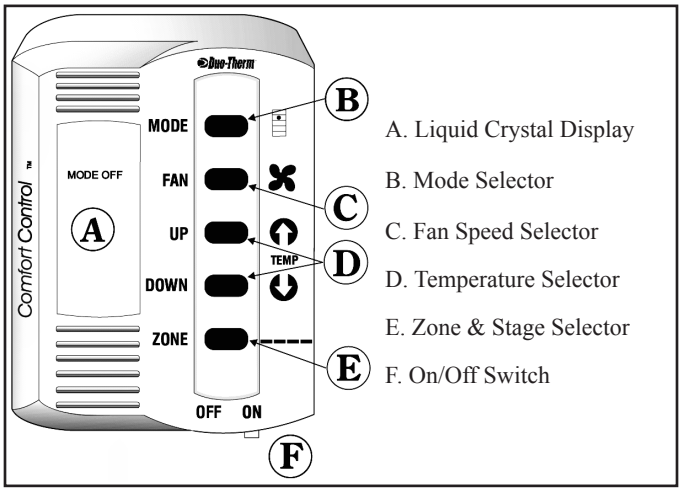

B. MODE SELECTOR BUTTON.
Modes of operation available are: OFF, FAN ONLY, COOL, HEAT PUMP, FURNACE, HEAT STRIP, AGS and AUX. HEAT. Remember, the LCD readout will only show the options available based on the appliances installed on your vehicle. To select the mode of operation, momentarily depress the MODE push-button. You will need to continue to depress and release the button until the desired mode is shown in the LCD readout area on the Comfort Control Center. To determine the Comfort Control Center options available to you, depress and release the MODE push-button until it goes through all selections.

C. FAN SPEEDS.
Possible available fan speeds are: LOW, MEDIUM, HIGH and AUTO. To select the desired fan speed, momentarily depress the FAN push button. You will need to continue to depress and release the FAN button until the desired fan speed is shown in the LCD readout area of the Comfort Control Center.

D. Temperature Selector Buttons.
The temperature Set-point range is from 40° to 99° Fahrenheit or 4° to 37° Celsius. Determination of Fahrenheit or Celsius standard is done at the time of your manufacturer's installation of the Climate Control Center. To set the temperature at your comfort level, simply depress and release the UP or DOWN push-button until the desired temperature is shown in the LCD readout area of the Comfort Control Center.

E. Zone Selector Button.
A ZONE is also established at the time of installation of your Comfort Control Center. If you have one air conditioner, you will have one ZONE. If your vehicle has more than one cooling/heating system, depending on the manufacturing installation, you may have 2, 3 or 4 ZONES. Zones are defined and preset by your installer/manufacturer. A zone is an area of cooling/heating which is controlled independently within that area, and regulated at the Comfort Control Center. A typical example of a two zone application would be a vehicle with two air conditioning systems, one in the front area (living room, kitchen) and one in the back section (bedroom and bath). The front area could be established as ZONE 1 and the back section ZONE 2. You can select the desired temperature and fan speeds for each zone independently, thereby keeping your bedroom cooler than the front portion of the vehicle. To determine the number of established zones in your vehicle, depress the ZONE push-button. ZONE 1 will be the first ZONE to appear in the LCD readout. The ZONE number selected will begin to flash and will flash for approximately 30 seconds or until another ZONE has been selected. Continue to depress and release the ZONE button until you see ZONE 1 reappear.

F. ON/OFF Switch.
The ON/OFF switch is located on the lower right hand edge of the Comfort Control Center. Move the lever from side to side to change status.

OPERATING THE DUO-THERM COMFORT CONTROL CENTER

A. Fan Only Mode Of Operation

1. Begin by placing the power switch on the lower right hand edge of the Control Center on the ON position. To do this, simply move the lever to the right.
2. Momentarily depress and release the MODE push- button until the FAN ONLY indicator on the Liquid Crystal Display (LCD) is illuminated.
3. Momentarily depress and release the FAN push-button until the desired fan speed indicator (LOW, MED, HIGH, AUTO) is illuminated. If your vehicle is equipped with a heat pump your selection choice will be LOW, HIGH or AUTO.
4. After approximately 5 seconds, the selected fan speed will come on. The MODE and FAN speed you have selected will remain shown in the LCD area of the Control Center until you change your selection.
5. If your vehicle contains more than one ZONE, depress the ZONE push-button to select ZONE 2, and repeat procedures from step two above. Repeat entire procedure for each additional zone.

B. Cooling Mode Operation

1. Momentarily depress and release the MODE push-button until the COOL indicator on the LCD is illuminated.
2. Depress and release the FAN push-button to select your desired fan speed (LOW, MEDIUM, HIGH or AUTO). If your vehicle is equipped with a heat pump your selection choice will be LOW, HIGH or AUTO.
3. Depress and release the UP push-button to increase the temperature or the DOWN push-button to decrease the desired temperature. The final selected SET-POINT will be displayed in the LCD area of the Comfort Control Center.
4. After a delay of approximately 2 minutes the air conditioner's compressor will come on and the cooling process will begin. Once the room temperature reaches the selected SET-POINT, the compressor will cycle off. Once the Comfort Control Center senses the need for cooling, the compressor will restart in approximately two minutes.

   A. Continue to operate in the single selected fan speed or
   B. Cycle OFF and ON with the compressor if the AUTO fan speed has been selected.

5. If your vehicle contains more than one ZONE, depress the ZONE push-button to select ZONE 2, and repeat procedures from Step 1. Repeat entire procedure for each additional zone.

C. Heat Pump Operation

1. Momentarily depress and release the MODE push-button until the HEAT PUMP indicator on the LCD is illuminated.
2. If you have not previously set your fan speed, you may do so by depressing and releasing the FAN push-button to select the desired fan speed.
3. Depress and release the UP push-button to increase the temperature or the DOWN push-button to decrease the desired temperature. The final selected SET-POINT will be displayed in the LCD area of the Comfort Control Center.
4. After a delay of approximately 2 minutes the heat pump's compressor will come on and the heating process will begin. Once the room temperature reaches the selected SET-POINT, the compressor will cycle off. Once the Comfort Control Center senses the need for heating, the compressor will restart in approximately two minutes. At this point, the fan will either:
   A. Operate in the single selected fan speed or,
   B. Cycle OFF and ON with the compressor if the AUTO fan speed has been selected.
5. If your vehicle contains more than one ZONE, depress the ZONE push-button to select ZONE 2, and repeat procedures from Step 1 above. Repeat entire procedure for each additional zone.

Special Features built into the Heat Pump Comfort Control System

Aux. Heat

When in the HEAT PUMP mode, if the outside ambient temperature is measured to be below 32° F. (+/-2) and the vehicle is equipped with a furnace connected to the Comfort Control Center, the control will automatically select the FURNACE operation and the HEAT PUMP will shut down. When this happens, the AUX HEAT and the HEAT PUMP indicators on the LCD will illuminate. Once the outside ambient temperature is measured above 38° F. (+/-2) , the control will return to the HEAT PUMP operation and shut down the furnace if it is connected to the Comfort Control Center.

Important: If vehicle is not equipped with a furnace no heat will be available below 32° F. (+/-2). IF vehicle is equipped with a furnace and it is connected to its own thermostat, it must be manually turned ON and OFF for operation.

Defrost Cycle

This cycle is active during HEAT PUMP operation and allows the heat pump to operate down to 32° F. (+/-2). When the outside ambient temperature is less than 42° F.. (+/-2) and greater than 32° F. (+/-2), a defrost timing cycle will begin. The defrost timing cycle will allow operation of the heat pump for 25 minutes. The fan will then be shut off, the refrigerant flow reversed and run for 4-1/2 minutes compressor only no fan, this is the DEFROST cycle. During the defrost cycle the hot refrigerant is sent to the outside coil to melt the frost and ice. This also will build heat in the refrigerant. The refrigerant flow will then be returned to normal and, after a 30 second delay will continue until the temperature is greater than 42° F. (+/-2) or until the temperature becomes less than 32° F. (+/-2), at which time the furnace will activate. During the defrost cycle, the DEFROST indicator on the LCD shall be illuminated.

D. Furnace Mode

1. Momentarily depress and release the MODE push-button until the FURNACE indicator on the LCD is illuminated.
2. The A/C fan does not operate in the FURNACE mode.
3. Depress and release the UP push-button to increase the temperature or the DOWN push-button to decrease the desired temperature. The final selected SET-POINT will be displayed in the LCD area of the Comfort Control Center.
4. The Duo-Therm air conditioning system will not operate when the Comfort Control System is in the FURNACE mode. Furnace operation over rides all other modes and zones when selected. For cooling, change the MODE to COOL.
5. If your vehicle contains more than one ZONE, depress the ZONE push-button to select ZONE 2, and repeat procedures from Step 1 above. Repeat entire procedure for each additional zone.

E. Heat Strip Mode

1. Momentarily depress and release the MODE push- button until the HEAT STRIP indicator on the LCD is illuminated.
2. The fan will operate in LOW, MED or AUTO. You will not be able to select HIGH speed when in the HEAT STRIP mode. Depress and release the FAN push- button to select desired speed. If your vehicle is equipped with a heat pump, your selection choice will be LOW and AUTO.
3. Depress and release the UP push-button to increase the temperature or the DOWN push-button to decrease the temperature. The final selected SET-POINT will be displayed in the LCD area of the Comfort Control Center.
4. The electric heat strip will cycle ON and OFF per the temperature SET-POINT displayed. The fan will either:
   A. Continue to operate in the selected fan speed or,
   B. Cycle OFF and ON with the heat strip if the AUTO fan speed has been selected.
5. If your vehicle contains more than one ZONE, depress the ZONE push-button to select ZONE 2, and repeat procedures from Step 1 above.

Repeat entire procedure for each additional zone. The temperature rise across the heat strip should be 5° to 7° degrees. If the temperature in the coach is 50° degrees the temp coming out of the unit will be approximately 55° to 57°. On the hand this will feel cool and the user may not think the unit is working.

COMFORT CONTROL CENTER SPECIAL CONTROL FEATURES

A. Auto Fan: When AUTO FAN is selected, the fan speed will be determined by the mode you are in.

1. Cool Mode:

In the COOL mode, which is the air conditioning mode, the fan will automatically select the speed depending upon the difference between the temperature SET-POINT and the room temperature. When that difference is:

8° or more The fan will operate on HIGH

4° to 8° The fan will operate on MED

4° or below The fan will operate on LOW

2. Cool Mode (Heat Pump)

If your vehicle is equipped with a Duo-Therm Heat Pump, the fan will automatically select the fan speed depending upon the difference between the temperature SET-POINT and the room temperature. When the difference is:

8° or more The fan will operate on HIGH

Less than 8° The fan operates on LOW

3. Heat Pump Mode

When HEAT PUMP mode is selected, the fan will start running on the LOW speed.

4. Heat Strip Mode

When HEAT STRIP mode is selected, the fan will start running on the LOW speed.

5. Fan Only Mode

In the FAN ONLY mode, the fan will start running on the LOW speed.

B. Refrigerant Compressor Time Delay

A time delay of approximately two minutes occurs any time the compressor is required to begin the cooling or heat pump cycle.

C. POWER INTERRUPTION

In the event that power to the air conditioner or control is interrupted, the system will restart with the same settings you have previously set.

D. ZONE CONTROL

The Duo-Therm Control Center will operate cooling and heating appliances which your vehicle manufacturer has designed to heat or cool different areas (ZONES) of your RV. The Comfort Control Center will advise you if your vehicle has multiple ZONES, by showing ZONE 1, 2 3 or 4 illuminated in the LCD readout. In the event your vehicle has multiple zones designed, you have the freedom of selecting the MODE of operation for each zone independently. To change from one zone to another, depress the ZONE push-button. Each time you depress and release this push-button, the indicator will change the zone data displayed. The zone number flashing indicates zone being programmed. The zone number will flash for approximately 30 seconds unless another zone is selected or programming has been completed. At this time the number will stop flashing and the display light will go out. When all zones have been programmed, the zones in operation will be underlined. To program each zone, simply repeat the programming steps shown in the operation section of this manual.

Important: The Comfort Control Center will prevent operating FURNACE and COOL or FURNACE and HEAT PUMP at the same time.

E. OPT. AUTOMATIC GENERATOR START (AGS)

On vehicles equipped with an optional AGS kit the vehicle generator will automatically start when any zone calls for cooling/heating and will shut off when all zones reach set point.

1. Put the power switch in the ON position.

2. Momentarily depress and release the ZONE push-button until AGS indicator appears on the LCD.

3. Momentarily depress and release the MODE push-button to select AGS status.

Important: When shore power is available, AGS must be switched to the off position.

1.4 CCC 2

This type of air conditioner controls can be ducted or have an air distribution box with wall T-Stat. The Comfort Control 2 has been designed to easily operate all the air conditioning and heating appliances found in the vehicle from one location. In order to familiarize you with the operation of the Comfort Control 2, the following diagram along with the accompanying text will explain all the functional characteristics of the system.

A. Liquid Crystal Display

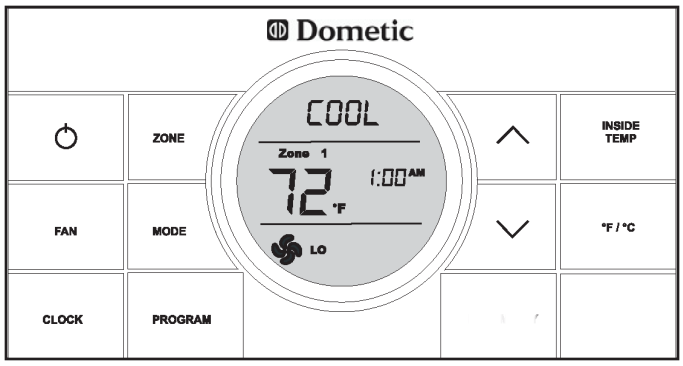

The CCC 2 thermostat is equipped with an Oversized LCD Display with SMX Blue Lite Technology (a display you can read day or night without turning on the lights) that identifies the mode of operation (OFF, Cool, Heat Pump, Fan, Heat Strip, Auto, & Furnace or Aqua), temperature set-point, zone identification (1, 2, 3, 4), fan speed (Auto, Low, Med, High), program 1 and 2, inside temperature, clock, ºF / ºC, compressor delay, filter maintenance. The modes of operation viewed in the LCD will vary depending on the systems installed.

B. Operations

1. ON/OFF

To turn ON the CCC 2 thermostat when the back light is off, first press any button to wake up the CCC 2 thermostat. Then press and release the ON/OFF button. The LCD will display the last programmed settings. To turn OFF the CCC 2 thermostat press the ON/OFF button and release. Only the time of day will display when the CCC 2 thermostat is in the OFF condition.

Quick reference to control buttons

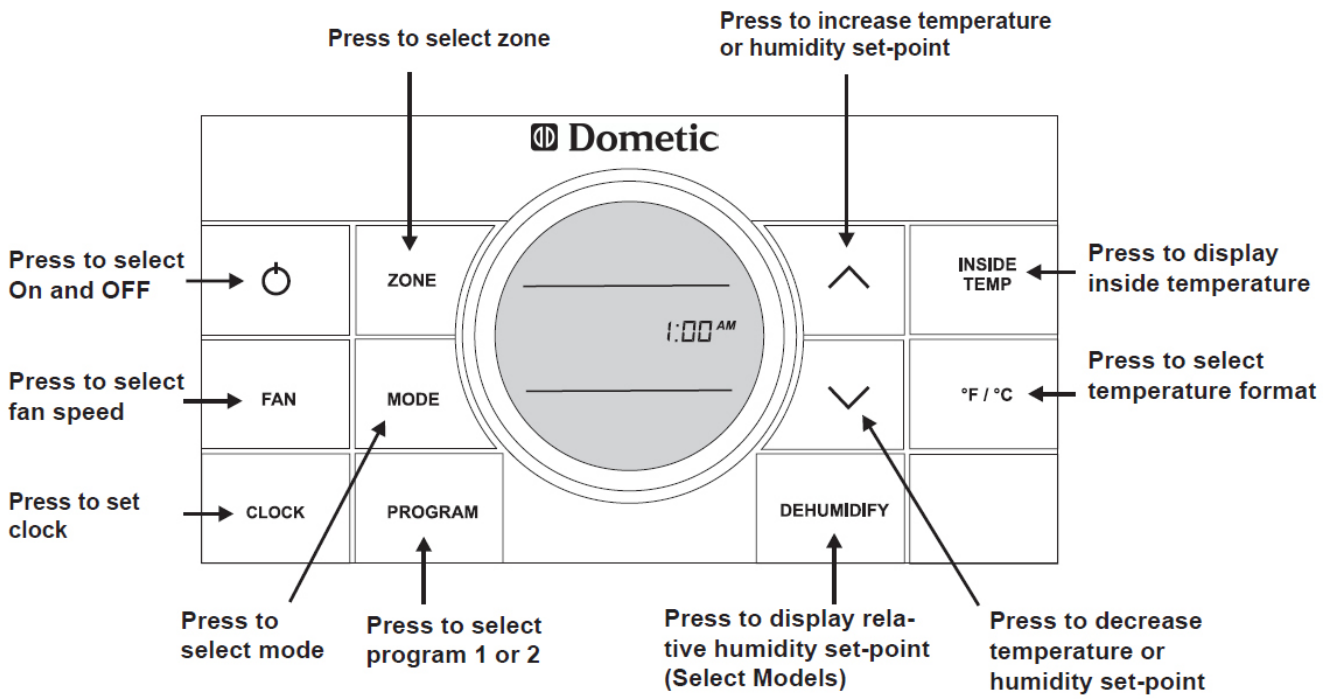

2. Clock Setting

Press the CLOCK button to initiate the clock setting sub-menu on the CCC 2 thermostat. When in this menu, the hour digits will flash first. The hour can be adjusted using the ∧ or ∨ buttons. Press the CLOCK button again and the minute digits will flash, allowing the minute setting to be adjusted using the ∧ or ∨ buttons. Press it a third time and the AM or PM icon will flash, allowing the AM or PM setting to be adjusted using the ∧ or ∨ buttons. Press it one more time to store the new time in memory and exit the clock setting sub-menu.

3. Inside Temperature

Press and hold the INSIDE TEMP button and the LCD will display the current inside temperature recorded at the CCC 2 Thermostat (or at the optional remote indoor temperature sensor) instead of the temperature set-point. The LCD will also display "IN" to indicate that the inside temperature is being displayed. When the INSIDE TEMP button is released, the LCD will return to the programmed temperature setpoint.

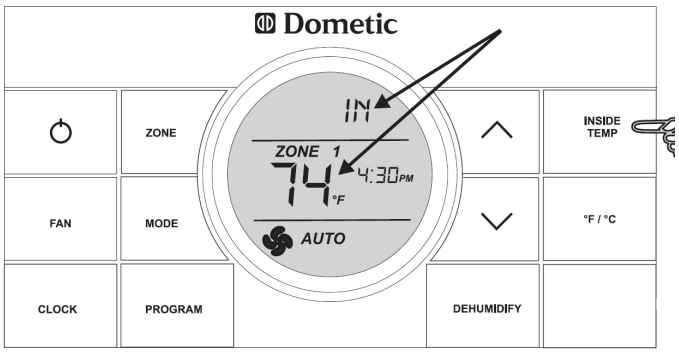

4. Temperature format ºF / ºC

Press the ºF / ºC button to switch between Fahren heit and Centigrade format. ºF indicates Fahrenheit and ºC indicates Centigrade.

5. Zone Selection

Press the Zone button to cycle the LCD display through the available zone selections; Zone 1, Zone 2, Zone 3, and Zone 4. Only the available zones installed within system will display. Zones are established at the time of the installation of Dometic CCC 2 thermostat. A zone is an area of cooling/heating which is controlled independently by the CCC 2 thermostat. The CCC 2 thermostat allows for four zones (Air Conditioner/Heat Pump) to be set up and run independent of each other. If you have one air conditioner/heat pump installed, you will have one zone. If the RV has more than one cooling/heating system, you may have 2, 3, or 4 zones. Your CCC 2 thermostat will operate cooling and heating appliances that your vehicle manufacturer/dealer has designed/installed to cool or heat specific areas (zones) of your RV. The CCC 2 thermostat will advise you of the number of zones in your RV. The zones are displayed 1, 2, 3, or 4 in the LCD readout. In the event your vehicle has multiple zones designed, you have the freedom of selecting different modes of operations for each zone. To change from one zone to another, press the ZONE push-button on the CCC 2 thermostat. Each time the button is pressed and released the indicator will change the zone data displayed. When the zones have been programmed, the zones in operation will be displayed.

6. Mode Selection

Press the MODE button and the LCD will display the first available mode. Each successive press will advance to the next available mode. Continue to press the MODE button until the desired mode appears. Depending on the systems installed, your choices will be OFF, COOL, AUTO, HP, FURN or AQUA, HS, and FAN.

6. Fan Speed

Press the FAN button to select the desired fan speed. Each successive press will advance to the next available speed. Your selections will be Auto, LOW, MED, and HIGH. The fan will run continuously during LOW, MED, and HIGH fan settings. The fan will cycle on and off with the thermostat on AUTO setting. When auto fan is selected the fan speed will vary depending on the difference between the temperature set-point and the room temperature. When the difference is:

8º or more The fan operates on HIGH
5º to 7º The fan operates on MED
4º or less The fan operates on LOW

7. Temperature Set-Point

Press the ∧ or ∨ button to change the temperature set-point. The temperature set-point is indicated by two digits on the LCD. Press ∧ to increase and ∨ to decrease the temperature set-point. The maximum set-point for the system is 90º F. The minimum set-point is determined by the active operating mode. For heating, the minimum is 40º F. and minimum for cooling is 55º F.

C. Mode Descriptions

"OFF" - Off Mode
Displays OFF mode in a zone.

"COOL" - Cool Mode
In the COOL mode the system will cycle the compressor ON and OFF based on the room air temperature and the temperature set-point on the CCC 2 thermostat. When the system calls for cooling there will be a delay of approximately two minutes. During this delay, the hour glass icon will be displayed in the LCD. In auto fan, the fan will turn ON first followed by the compressor in approximately 15 seconds. In this mode there are 4 fan speed selections:
LOW: The fan operates continuously at low speed. The compressor cycles On and OFF.
MED: The fan operates continuously at medium speed. The compressor cycles ON and OFF.
HIGH: The fan operates continuously at high speed. The compressor cycles ON and OFF.
AUTO: When auto fan is selected the fan speed will vary depending on the difference between the temperature set-point and the room temperature. In auto fan the compressor and the fan will cycle ON and OFF with the thermostat. See "Fan" on page 15 for information on auto fan. The compressor shuts off first followed by the fan in approximately 15 seconds.

"HP" - Heat Pump Mode
In the HP mode the system will cycle the compressor ON and OFF based on the room air temperature and the temperature set-point on the CCC 2 thermostat. When the system calls for heating there will be a delay of approximately two minutes. During this delay, the hour glass icon will be displayed in the LCD. In auto fan, the compressor will turn ON first followed by the fan in approximately 15 seconds. In this mode there are 4 fan speed selections:
LOW: The fan operates continuously at low speed. The compressor cycles On and OFF.
MED: The fan operates continuously at medium speed. The compressor cycles ON and OFF.
HIGH: The fan operates continuously at high speed. The compressor cycles ON and OFF.
AUTO: When auto fan is selected the fan speed will vary depending on the difference between the temperature set-point and the room temperature. In auto fan the compressor and fan will cycle ON and OFF with the thermostat. The compressor shuts off first followed by the fan in approximately 15 seconds.

"HS" - Heat Strip Mode
In the HS mode the system will cycle the heat strip ON and OFF based on the room air temperature and the temperature set-point on the CCC 2 thermostat. In this mode there are 4 fan speed selections:
LOW: The fan operates continuously at low speed. The heat strip cycles On and OFF.
MED: The fan operates continuously at medium speed. The heat strip cycles ON and OFF.
HIGH: The fan operates continuously at high speed. The heat strip cycles ON and OFF.
AUTO: The fan operates in low speed and will cycle ON and OFF with the thermostat.

"FAN" - Fan Mode
In FAN mode there are 4 fan speed selections:
LOW: The fan operates continuously at low speed.
MED: The fan operates continuously at medium speed.
HIGH: The fan operates continuously at high speed.
AUTO: The fan will be OFF.

"FURN" / "AQUA" - Furnace or Aqua Mode (Factory setting is "FURN")
To change the setting from "FURN" to "AQUA" or visa versa, simultaneously press the ∧ up and ∨ down buttons. The LED will display the selected option. In the FURN/AQUA mode the system will cycle the RV's furnace/aqua ON and OFF based on the room air temperature and the temperature set-point on the CCC 2 thermostat. The system can be configured to operate using an ON/OFF differential of either 1 degree F. or 2 degree F. This feature is programmed during the system initialization. To set the 1 degree differential, simultaneously press PROGRAM button and ∧ up button ("dIF1" will appear in the display while the buttons are pressed).

To set the 2 degree differential, simultaneously press the PROGRAM button and the ∨ down button (dIF2" will appear in the display while the buttons are pressed). In this mode there are 4 fan speed selections:
LOW: The fan operates continuously at low speed.
MED: The fan operates continuously at medium speed.
HIGH: The fan operates continuously at high speed.
AUTO: The fan is OFF.

"AUTO" - Auto Change Over Mode
In the AUTO mode the system will automatically change the mode of operation from cool to heat or from heat to cool. In order for this mode to operate, the zone being programmed must contain either a heat pump, heat strip or furnace heating source. When in the AUTO mode, all pre-programmed operations for the heat pump, heat strip, and furnace will apply. Auto Change Over Cooling: If the room temperature rises above the temperature set-point by 2 degrees, the air conditioner will turn ON until the room temperature reaches the temperature set-point at which time the air conditioner will cycle off. Auto Change Over Heating: If the room temperature goes below the temperature set-point by 2 degrees, the available heat source will be cycled ON until the room temperature reaches the temperature set point at which time it will cycle OFF. If more than one heat source is available on this zone, the priority for selecting the heat source will be heat pump (first), furnace (second), and heat strip (third).

D. Special Features

Zone Control
Zones are established at the time of the installation of your Dometic CCC 2 thermostat. A zone is an area of cooling/heating which is controlled independently by the CCC 2 thermostat. The CCC 2 thermostat allows for four zones (Air Conditioner/Heat Pump) to be set up and run independent of each other. If you have one air conditioner/heat pump installed, you will have one zone. If your RV has more than one cooling/heating system, you may have 2, 3, or 4 zones. Your CCC 2 thermostat will operate cooling and heating appliances that your installer has designed to cool or heat specific areas (zones) of your RV. The CCC 2 thermostat will advise you of the number of zones in your RV. The zones are displayed 1, 2, 3, or 4 in the LCD readout. In the event your vehicle has multiple zones designed, you have the freedom of selecting different modes of operations for each zone. To change from one zone to another, press the ZONE push-button on the CCC 2 thermostat. Each time the button is pressed and released the indicator will change the zone data displayed. When the zones have been programmed, the zones in operation will be displayed.

Program 1 & 2
The Dometic CCC 2 thermostat can store two operating programs. Each program can be set on individual zones with different mode and time settings for each zone. For each event the user can program the operating mode, fan speed, temperature set-point, and the time of day for the event.
1. Select the zone to be programmed.
2. Select program 1 by pressing the PROGRAM button. "PROG 1" icon will blink on the LCD display.
3. Press the CLOCK button to set the time of day for program to start.
4. Press the MODE button to select the mode of opera tion.
5. Press the FAN button to select the fan speed.
6. Press the PROGRAM button to save the "PROG" 1 settings. LCD will now show "PROG 2". To set program 2, repeat steps 3 - 5.

Press the Program button again to save programs in memory. Depending on the time of day, program 1 or 2 will begin immediately. For instance, if program 1 is set to begin at 10:00 AM and the time of day is 10:30 AM, program 1 will begin immediately. On the other hand, if program 1 is set to 10:00 AM and program 2 is set to begin at 6:00 PM and the time of day is 7:00 PM, program 2 will begin immediately.

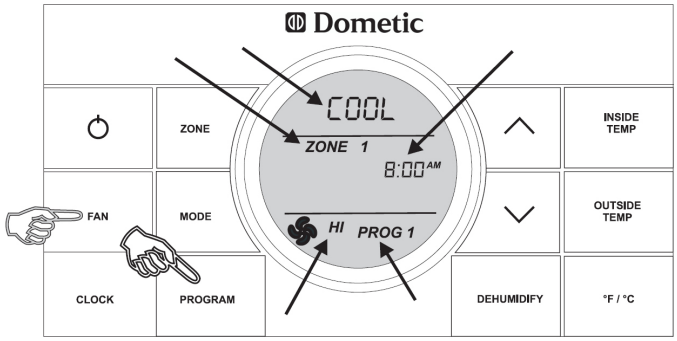

When program 1 or 2 is operating, the "PROG 1 or 2" icon will be displayed in the LCD. The zone will continue to operate in the programmed setting until the program is manually cancelled. To cancel the program operation, press and hold the PROGRAM button for 3 seconds. The zone will be restored to normal operation.

CANbus Interface
The CANbus interface is designed to communicate between the Dometic CCC 2 thermostat and a CAN (Controller Area Network) protocol generator. Refer to the CANbus installation instructions for more information on installation and operation of the CANbus.

EXT Stage Select - Two Air Conditioner/Heat Pump Units (Select Models) On 1 Zone
This system can be configured to run two air conditioner/heat pump units using the same temperature set-point for controlling the comfort level in one zone.

One unit is designated as the primary stage and the other unit is designated as the secondary stage. The power module boards in both units will use the same DIP switch selection for the Zone (for example, both will be set to Zone 2). On the unit designated "secondary" the power module board DIP switch identified as "Ext Stage" must be set to the ON position in order to configure the power module board for the on-demand secondary stage operation (in this example Zone 2 and Ext Stage DIP switches are in the ON position). In this stage configuration, the CCC 2 thermostat temperature set-point will be used for both the primary and the secondary stage air conditioner/ heat pump. Only one indoor temperature sensor is required for this configuration and it must be installed in the power module board configured as the primary control. The turn ON time for the compressors and fans will be controlled to ensure that compressors on the system start one-at-a-time. A minimum delay of 20 to 30 seconds is required between compressor starts.

Auto Generator Start (AGS)

On RV's equipped with an optional AGS Kit, the vehicle generator will automatically start when any zone calls for cooling and will shut off when zones reach set point. The Auto Generator Start (AGS) function will be implemented by an individual power module board configured for this function by setting the GEN Start DIP switch ON. On the AGS power module board a relay shall be used to provide a start signal to the generator. The normally open relay contacts are utilized and the closure of these contacts provides the signal to start the generator. The AGS relay shall be activated when any zone or stage requires cooling, heat pump, or heat strip operation. When a zone calls for heating, cooling or , the AGS relay shall be closed, followed by a time delay to allow the generator to warm up after which time the output relay will be activated on the zone that initiated the heating, cooling request. When the heat/cool requests in all zones have been satisfied, the AGS relay will open and the generator will shut-down.

Defrost Cycle (Heat Pump Models Only)

To avoid excessive frost formation on the outside coil and to obtain maximum performance when the outside temperature is less than 42º F. and greater than 30º F. (-1 °C), a defrost cycle will be initiated. While operating in this temperature range the compressor continuous run time is limited to 25 minutes. When this time is accumulated, the fan will shut off, the refrigerant flow will be reversed, and the compressor will continue to run for 4.5 minutes. During this 4.5 minute period, the LCD will toggle between HP and Defrost. The refrigerant flow will then be reversed and after a 30 second delay the fan will resume operation. This cycle will remove any frost formation on the outside coil. This cycle will repeat itself until the outside temperature is greater than 42º F. If the outside temperature becomes less than 30º F. the heat pump will shut OFF and the auxiliary heat (if provided) will turn on.

Auto Fan

When "AUTO" fan is selected, the fan speed will vary depending on the difference between the temperature set-point and the room temperature. In "AUTO" fan, the compressor and fan will cycle ON and OFF with the thermostat.

When the difference is:

8 °F / °C or more The fan operates on HIGH

5 to 7 °F / °C The fan operates on MED

4 °F / °C or less The fan operates on LOW

E. CCC 2 LCD Error Codes

When the system determines that one of the faults listed below has occurred an error code will be displayed in the LCD for the zone in which the error occurred. During normal operation, a blinking zone number indicates a fault has occurred. The error code is displayed in place of the temperature set-point.

E1 Loss of communication between the CCC 2 thermostat and all system power module boards. System will shut down. Loss of communication between the CCC 2 thermostat and an individual system power module board. The LED will display error code E1 and the zone number that lost communication. Any additional zones that lose communication will blink in addition to the current zone.

E2 Open circuit or out-of-range Indoor Temperature Sensor. All heat, cool, and dehumidify operation will be locked out. Manual fan operation can continue.

E3 Shorted Indoor Temperature Sensor. All heat, cool, and dehumidify operation will be locked out. Manual fan operation can continue.

E4 Open circuit or out of range Outdoor Temperature Sensor (Select Models). Heat pump and dehumidification operation will be locked out. Air conditioner, furnace, heat strip, and fan operation can continue to operate.

E5 Open circuit or out of range Freeze Sensor (Select Models). Air conditioner and dehumidification operation will be locked out. Heat pump, furnace, heat strip, and fan operation can continue to operate but displays the last temperature set-point.

E6 Open circuit Humidity Sensor (Select Models). Air conditioner and dehumidification operation will be locked out. Heat pump, furnace, heat strip, and fan can continue to operate.

E7 Loss of 120 VAC power to all power module boards on the system. The system will shut down.

E8 Invalid zone configuration. The heat pump and heat strip DIP switches are both set to the ON position in one zone. Heat pump, heat strip, air conditioner, and dehumidify operation will be locked out in the affected zone.

E9 Invalid zone configuration. The dehumidifier DIP switch and either the heat pump or heat strip DIP switches are set to the ON position in one zone. Heat pump, heat strip, air conditioner, and dehumidify operation will be locked out in the affected zone.

1.5 Single Zone Control

This type of air conditioner controls can be ducted or have an air distribution box with wall T-Stat. The Single Zone Control has been designed to easily operate the air conditioning and heating appliances found in the vehicle from one location. In order to familiarize you with the operation of the Single Zone Control, the following diagram along with the accompanying text will explain all the functional characteristics of the system.

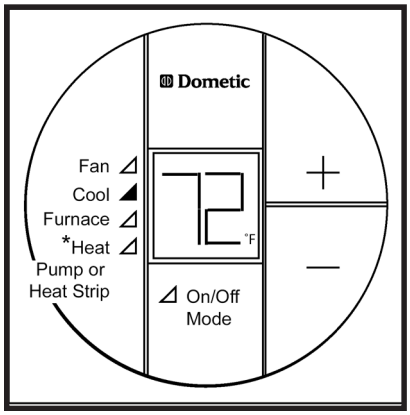

The Single Zone LCD thermostat is equipped with both a liquid crystal display (LCD) that identifies the temperature set-point, fan speed (Auto, Low, High), and F/C and green LEDs that indicate the mode of operation (Off, Fan, Cool, Furnace, Heat Pump or Heat Strip*). The
modes of operation available will vary depending on the system installed in your RV. * Select models.

Features

- Liquid Crystal Display and Green LED Mode Indicators
- Auto Fan
- Indoor Temperature Display
- °F / °C Display
- Air conditioner can provide additional indoor air circulation during furnace operation.

System Initialization

A system initialization will need to be performed by the installer after the system is installed.

- Make sure the Single Zone LCD thermostat is in the Off condition.
- Press the "+" button and, while holding it, also press and hold the On/Off Mode button for three seconds. LCD will show — — . Press the On/Off Mode button again to turn system off. This completes the initialization.

Your Dometic Single Zone LCD thermostat has been preprogrammed. Review settings below and adjust the settings to your personal comfort level. Any time System Initization is performed the Single Zone LCD T-stat will go to default settings.

Heating	68 °F / 20 °C
Cooling	72 °F / 22 °C
Fan Speed	Auto
Mode	Off
Furnace Differential	2 °F

Programming & Operations

On/Off

To turn On the Single Zone LCD thermostat, press the On/Off Mode button. The LCD will be activated. To turn Off the Single Zone LCD thermostat press the On/Off Mode button and toggle through the modes until the On/Off green LED is on. The LCD will go out and the green LED will remain on for approximately 15 seconds, then go out.

Temperature Format ºF / ºC

Simultaneously press the "+" and "—" buttons to toggle between Fahrenheit and Centigrade format. ºF indicates Fahrenheit and ºC indicates Centigrade.

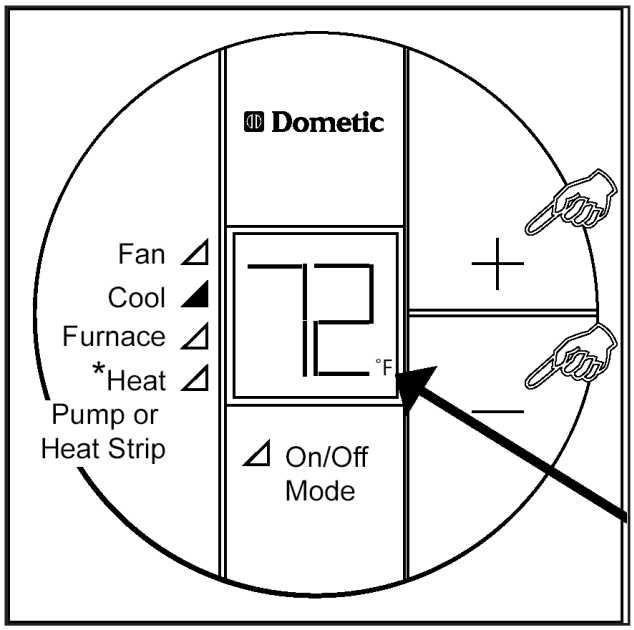

Inside Temperature

To display the Inside Temperature, the Single Zone LCD thermostat must be in the Off Mode. Press either the "+" or "—" button to display the Inside Temperature.

Quick Reference To Control Buttons

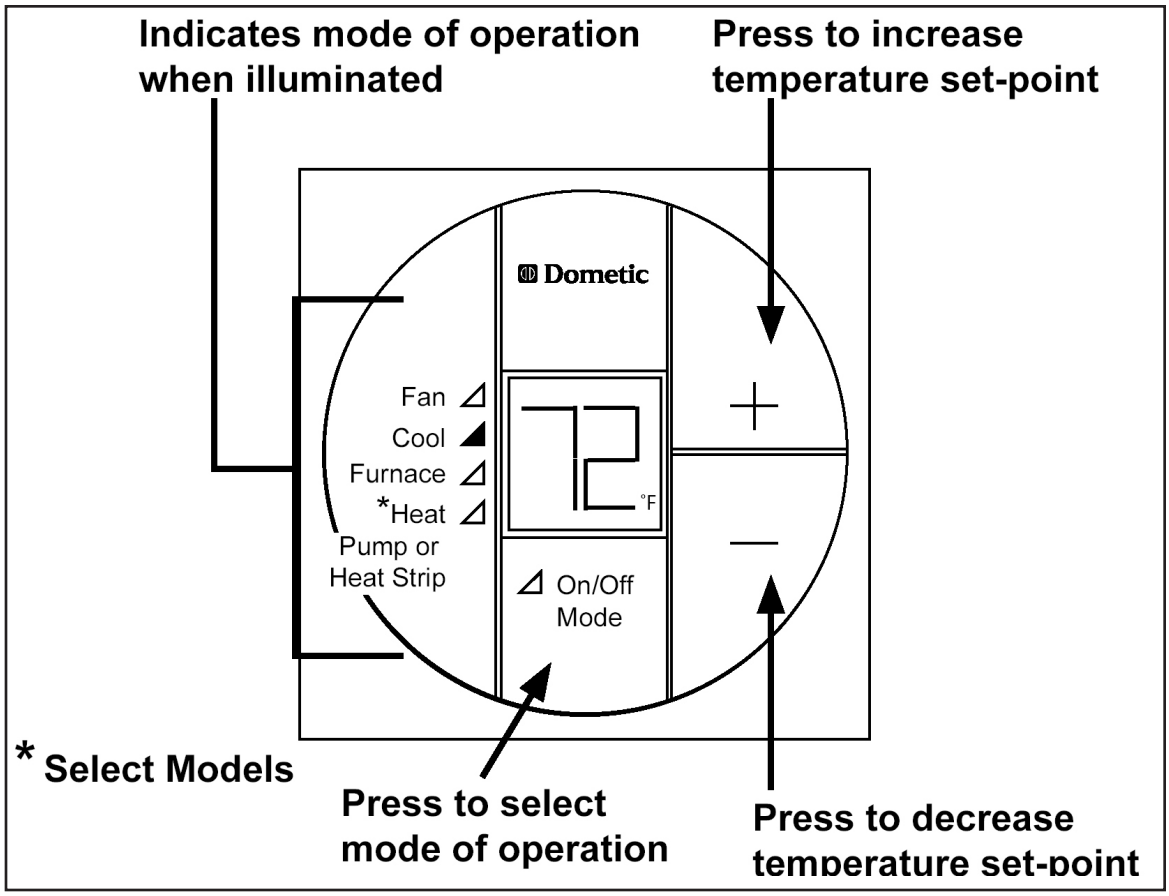

Mode Selection
Press the On/Off Mode button to advance through the available modes. Each successive press will advance to the next available mode. The green LED will indicate the mode selected. Depending on the systems installed, your choices will be Off, Fan, Cool, Furnace, Heat Pump or Heat Strip.

Fan Speed
Press the On/Off Mode button until the fan green LED is lit. The LCD will show "Lo" (Low), "Hi" (High) or "Au" (Auto). Press the "+" or "—" button to select the desired fan speed.

Temperature Set-Point
Press the "+" or "—" button to change the temperature set-point. The temperature set-point is indicated by two digits on the LCD. Press the "+" to increase and the "—" to decrease the temperature setpoint. The maximum set-point for the system is 90º F. The minimum set-point is determined by the active operating mode. For heating, the minimum is 40º F and minimum for cooling is 55º F.

Mode Description

"Off" - Off Mode
When selected, the LCD will be blank and the Off green LED will turn on for 15 seconds, then it will turn off.

"Cool" - Cool Mode
In the Cool mode the system will cycle the compressor On and Off based on the room air temperature and the temperature set-point on the Single Zone LCD thermostat. The fan will turn on first followed by the compressor in approximately 2 minutes. In this mode there are 3 fan speed selections:
Lo - (LOW): The fan operates continuously at low speed. The compressor cycles ON and OFF.
Hi - (HIGH): The fan operates continuously at high speed. The compressor cycles ON and OFF.
Au - (AUTO): When auto fan is selected the fan speed will vary depending on the difference between the temperature set-point and the room air temperature. In auto fan the compressor and the fan will cycle On and Off with the thermostat.

“Furnace” - Furnace Mode
In this mode there are 3 fan speed selections:
Lo - (LOW): The fan operates continuously at low speed.
Hi - (HIGH): The fan operates continuously at high speed.
Au - (AUTO): The fan will be OFF.

Note: If additional indoor air circulation provided by the air conditioner is not desired during Furnace Mode of operation, select Au (AUTO) in the Fan Mode to shut the air conditioner fan off. If Lo (LOW) or Hi (HIGH) is selected the air conditioner fan will continue to operate on the selected speed.
In the FURNACE mode the system will cycle the RV’s furnace On and Off based on the room air temperature and the temperature set-point on the Single Zone LCD thermostat. The system can be configured to operate using an On/Off differential of either 1 degree F or 2 degree F.
To set the temperature differential the system must be Off. Press the “—” button and, while holding it, also press and hold the On/Off Mode button for three seconds. Release the On/Off Mode button. Then release the “—” button. Press the “+” button to toggle between “d1” and “d2”, “d1” for 1 degree F differential and “d2” for 2 degrees F differential.

“Heat Pump” - Heat Pump Mode (Select Models)
In the Heat Pump mode the system will cycle the compressor On and Off based on the room air temperature and the temperature setpoint on the Single Zone LCD thermostat. When the system calls for heating there will be a delay of approximately two minutes. In auto fan, the compressor will turn On first followed by the fan in approximately 15 seconds. In this mode there are 3 fan speed selections:
Lo - (LOW): The fan operates continuously at low speed. The compressor cycles ON and OFF.
Hi - (HIGH): The fan operates continuously at high speed. The compressor cycles ON and OFF.
Au - (AUTO): When auto fan is selected the fan speed will vary depending on the difference between the temperature set-point and the room temperature. In auto fan the compressor and fan will cycle On and Off with the thermostat. The compressor shuts off first followed by the fan in approximately 15 seconds.

“Heat Strip” - Heat Strip Mode (Select Models)
In the Heat Strip mode the system will cycle the heat strip On and Off based on the room air temperature and the temperature setpoint on the Single Zone LCD thermostat. In this mode there are 3 fan speed selections:
Lo - (LOW): The fan operates continuously at low speed. The heat strip cycles On and Off.
Hi - (HIGH): The fan operates continuously at high speed. The heat strip cycles On and Off.
Au - (AUTO): The fan operates in low speed and will cycle On and Off with the thermostat.

“Fan” - Fan Mode
In Fan mode there are 3 fan speed selections:
Lo - (LOW): The fan operates continuously at low speed.
Hi - (HIGH): The fan operates continuously at high speed.
Au - (AUTO): The fan will be Off.

Special Features

Auto Fan
When auto fan is selected the fan speed will vary depending on the difference between the temperature set-point and the room temperature. In auto fan the compressor and fan cycle On and Off with the thermostat.
When the difference is:
>5º The fan operates on HIGH
<4º The fan operates on LOW

Compressor Time Delay
A time delay of approximately two minutes occurs any time the compressor is required to begin the cooling or heat pump cycle.

Power Interruption
In the event the power to the air conditioner or control is interrupted, the system will restart with the previous set points once power is restored.

Single Zone LCD Error Code
When the system determines that one of the faults listed below has occurred an error code will be displayed in the LCD.
Error Code:
E1 Loss of communication between the Single Zone LCD thermostat and the module board. LCD will cycle between E1 and the previous mode setting. System will shut down.
E2 Open circuit or out of range Indoor Temperature Sensor. Heating and cooling operation will be locked out. Fan operation can continue to operate.
E3 Shorted Indoor Temperature Sensor. Heating and cooling operation will be locked out. Fan operation can continue to operate.
E4 Open circuit or out of range Outdoor Temperature Sensor (select models). Heat Pump operation will be locked out. Air Conditioner, Fan and Furnace operation can continue to operate.
E5 Open circuit or out of range Freeze Sensor. Air conditioner mode of operation will be locked out. Furnace, heat strip, heat pump and fan mode of operation can continue to operate but displays the last temperature set-point.

SECTION 2

2.1 AC Voltage

⚠ WARNING

This is an energized circuit. Shock can occur if not tested properly. Testing is to be done by a qualified service technician.

The unit is an 120 VAC, 60 Hz appliance. The proper operating range is between 103.5 and 126.5 volts AC. The voltage reading should be taken at the unit power supply leads. One test should be performed when the unit is turned OFF and another with it running under load. If the voltage is not within the proper operating range, it must be corrected before trouble shooting of the unit can begin.

Check for proper AC volts at the connections at the units electronic control box.

2.2 Breaker

The unit is to be protected by a time delay fuse or HACR (heating, air conditioner, refrigerator) breaker. By taking an amp reading at the unit AC voltage supply line, you can determine if the breaker is tripping prematurely. Place a clamp-on type amp meter around the black wire between the unit and breaker. Turn ON the unit and record the amp draw. If the breaker trips before the rated amperage, replace the breaker.

2.3 Unit Wiring

With the line circuit breaker turned off, check to see if the air conditioner is wired correctly. Each air conditioner is supplied with a wiring diagram. Check all connections for clean/tight and proper location. Reference typical wiring diagrams next page.

Note: Be sure to use the wiring diagram on the appli ance for the specific unit you are diagnosing.

⚠ WARNING

This is an energized circuit. Shock can occur if not tested properly. Testing is to be done by a qualified service technician.

2.4 Field Wiring

If the unit's compressor or fan fails to operate, chances are it is not receiving proper power. Be sure the power cord is plugged in and fuses or breakers are OK. Wires at the roof top unit are tight.

Note: Many customers use extremely long power cords that are undersized. If possible, ask the owner to show you the power cord or hook up the RV just like it was when the problem occurred at the camp site. On holiday weekends the camp sight will be at 120% capacity.

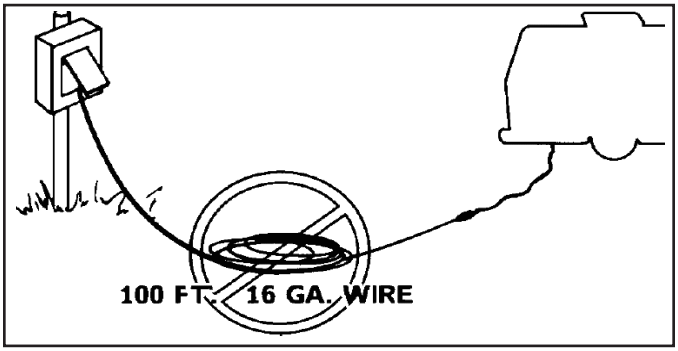

TYPICAL AIR CONDITIONER WIRING DIAGRAM

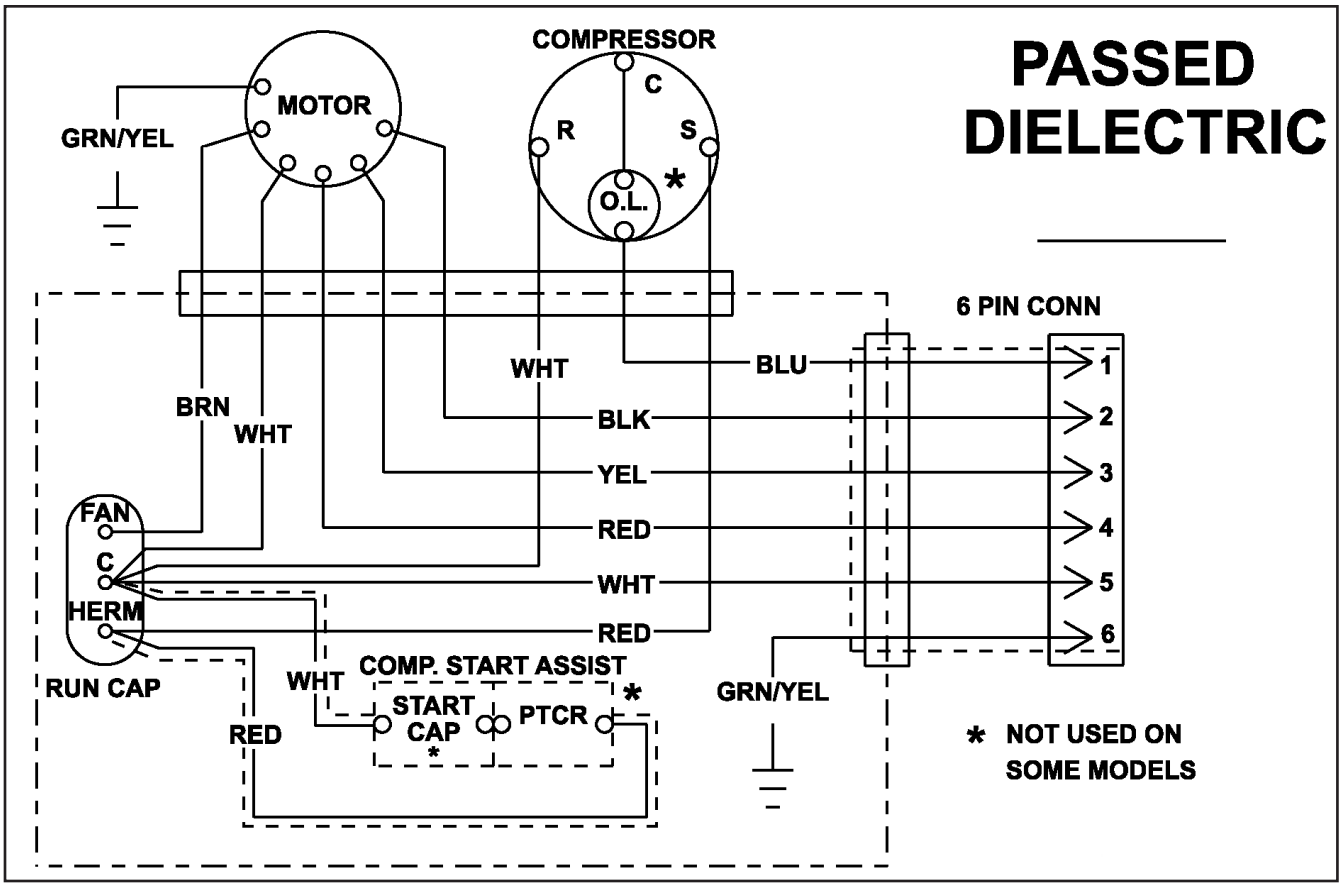

TYPICAL AIR BOX WIRING

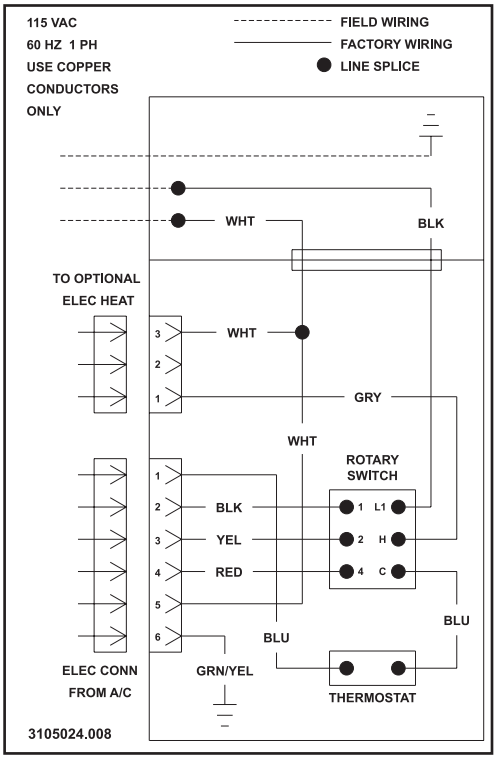

TYPICAL CCC CONTROL BOARD WIRING

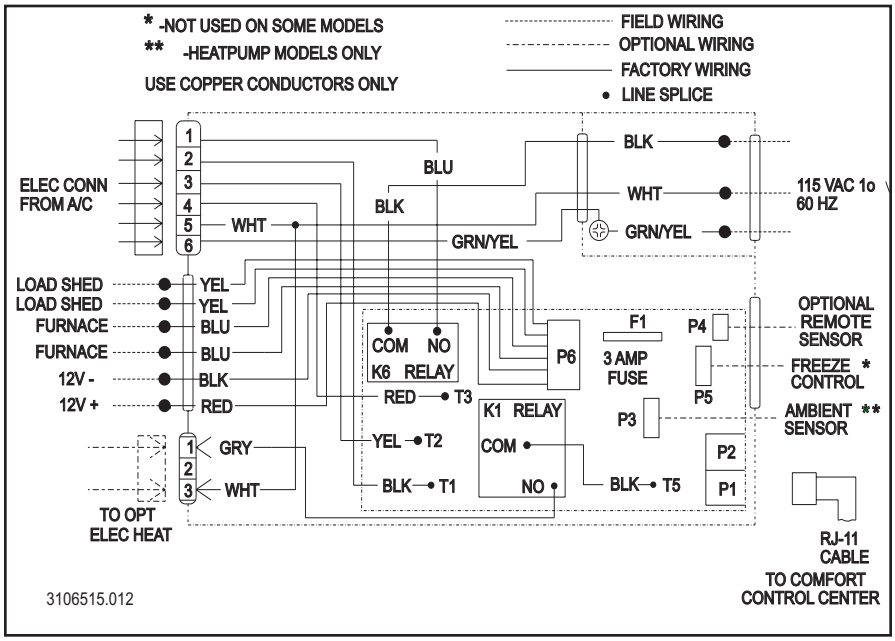

Wiring Diagrams

Wiring Diagram for 3107541.009 Cool & Furnace

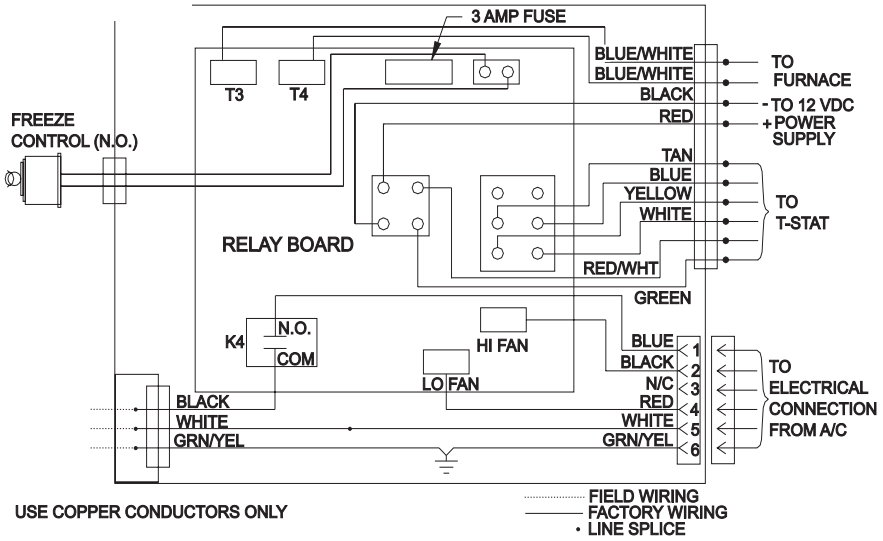

Wiring Diagram for 3107541.017 Cool, Furnace & Heat Strip

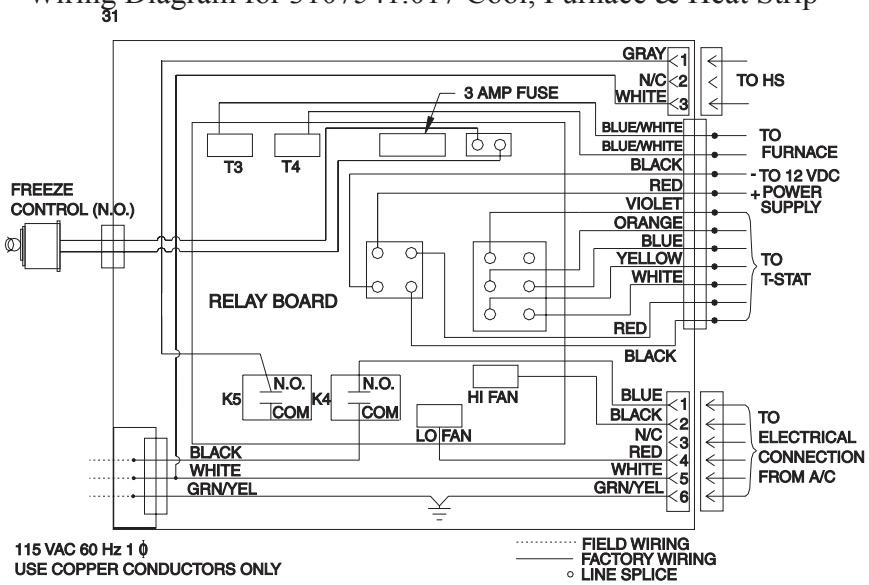

Wiring Diagram for 3107546.008 Cool, Furnace & Heat Pump

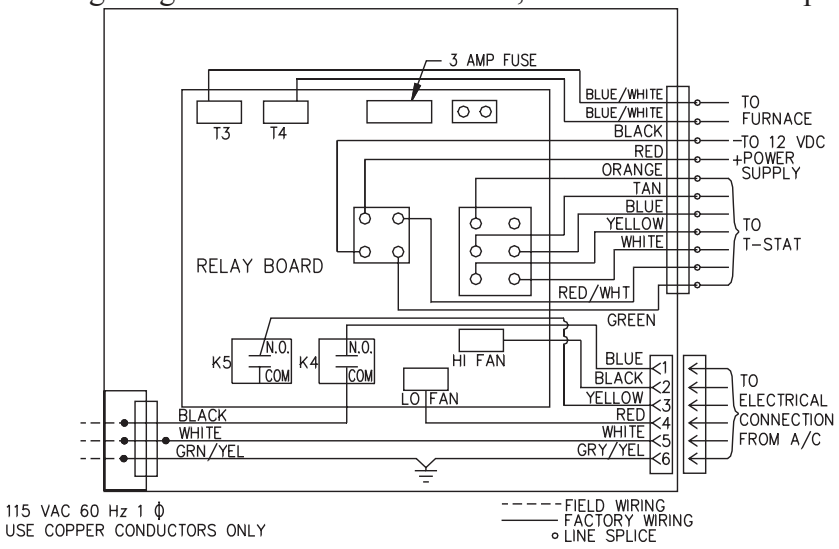

Wiring Diagrams

3313189.000 & 3313189.015 Single Zone LCD Electronic Control Kit Cool/Furn Wiring Diagram

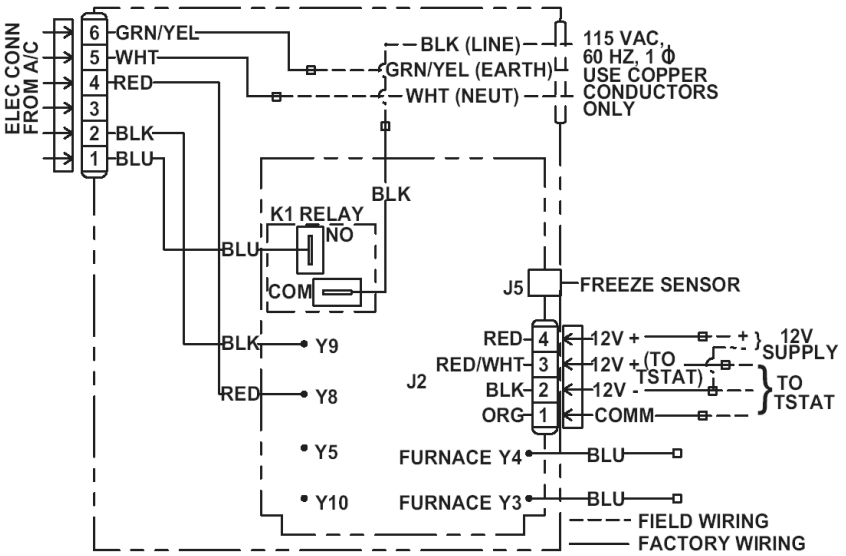

3313189.049 & 3313189.056 Single Zone LCD Electronic Control Kit Cool/Furn/Heat Strip Wiring Diagram

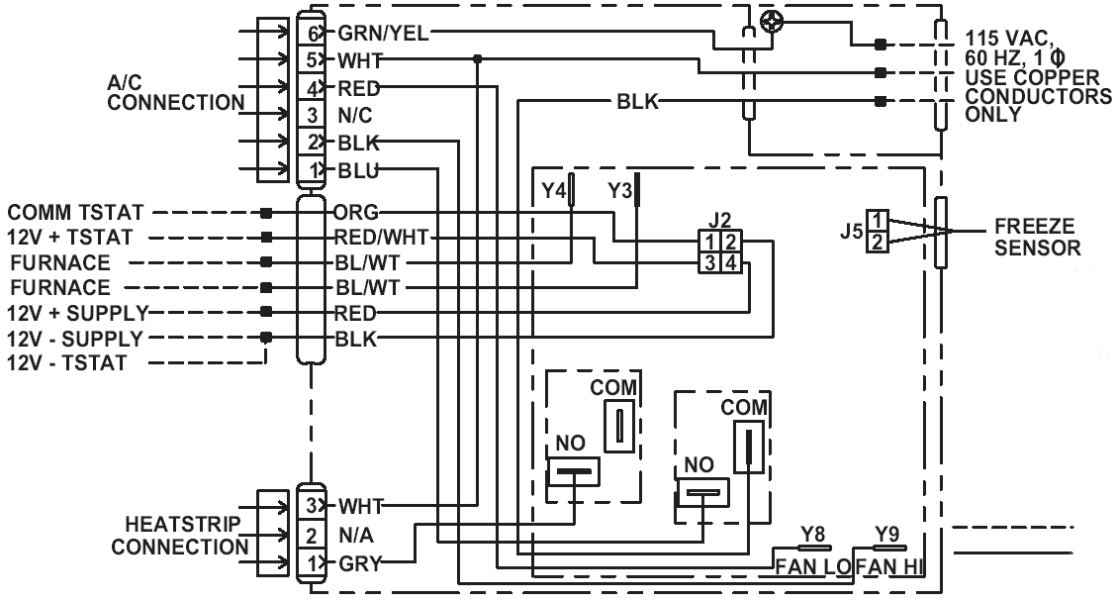

3313189.023 & 3313189.031 Single Zone LCD Electronic Control Kit Cool/Furn/HP Wiring Diagram

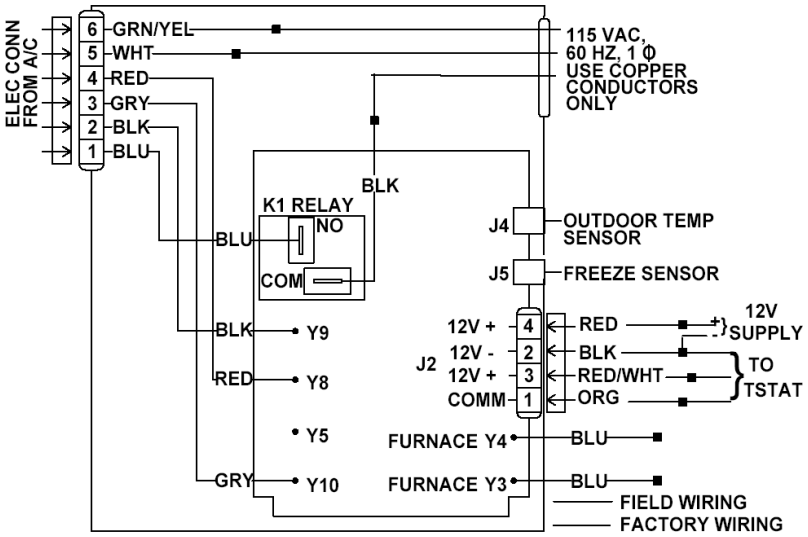

TYPICAL BRISK HEAT PUMP WIRING DIAGRAM

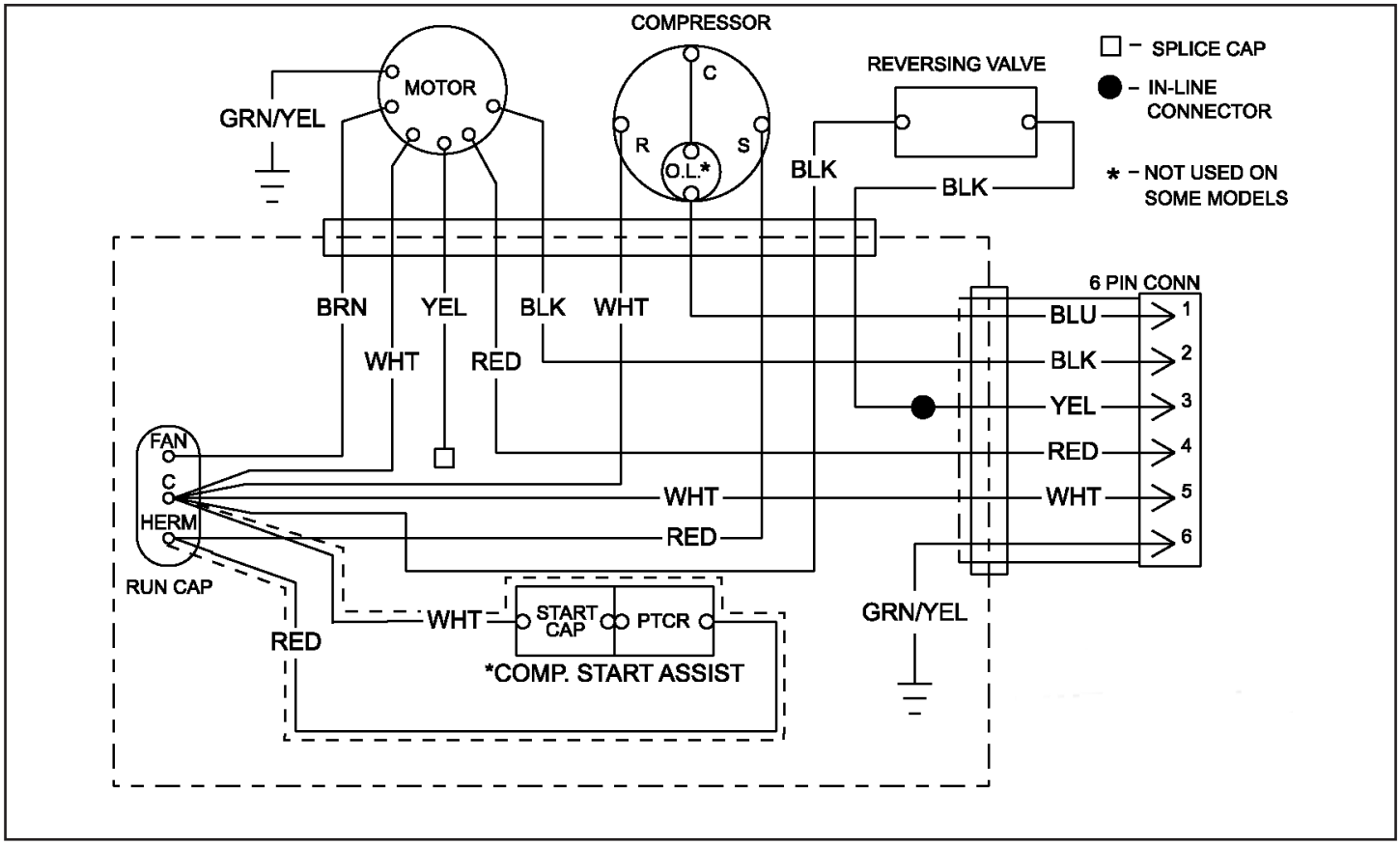

TYPICAL CCC 2 PENGUIN HEAT PUMP WIRING DIAGRAM

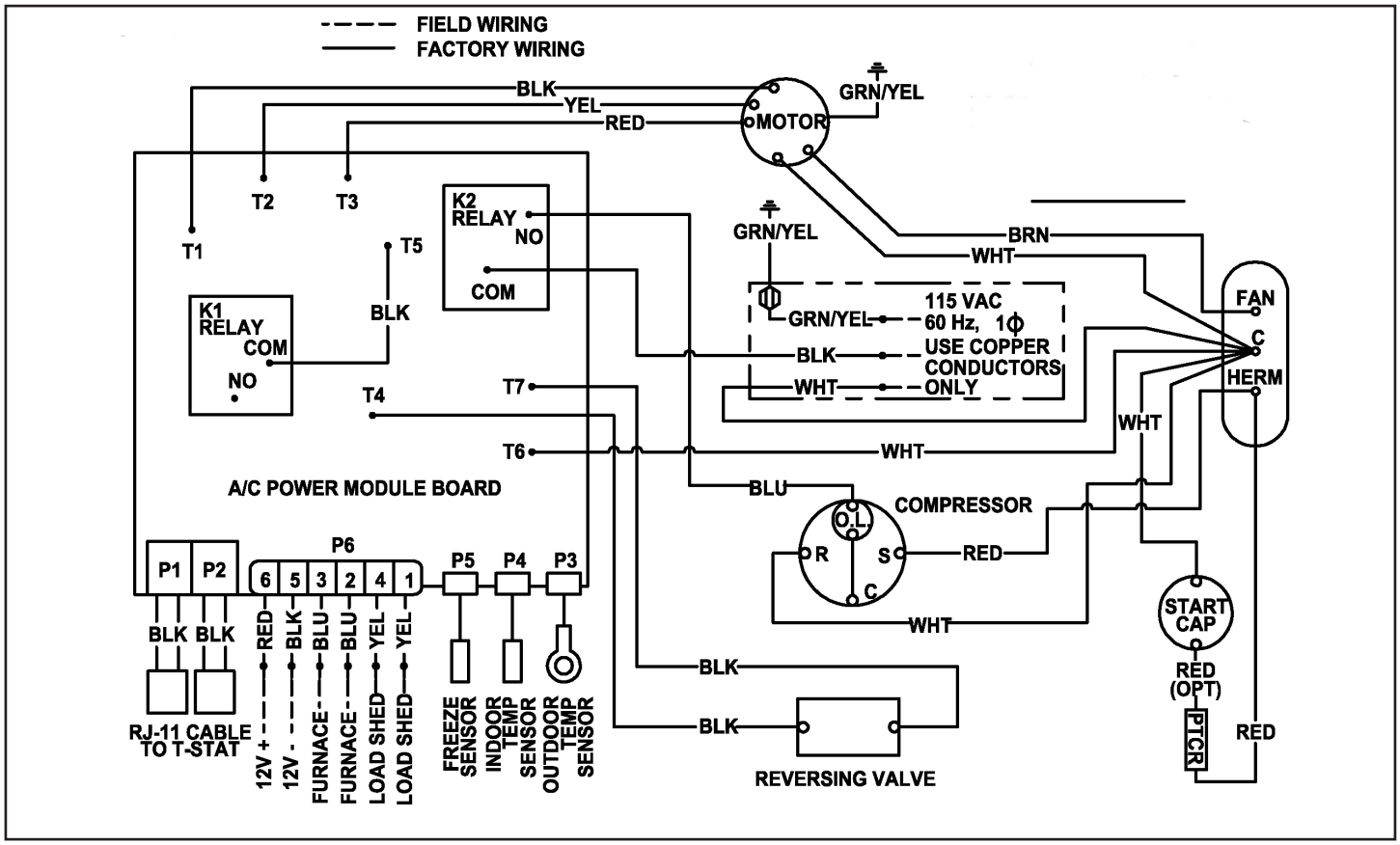

TYPICAL MECHANAL BRISK HEAT PUMP WIRING DIAGRAM

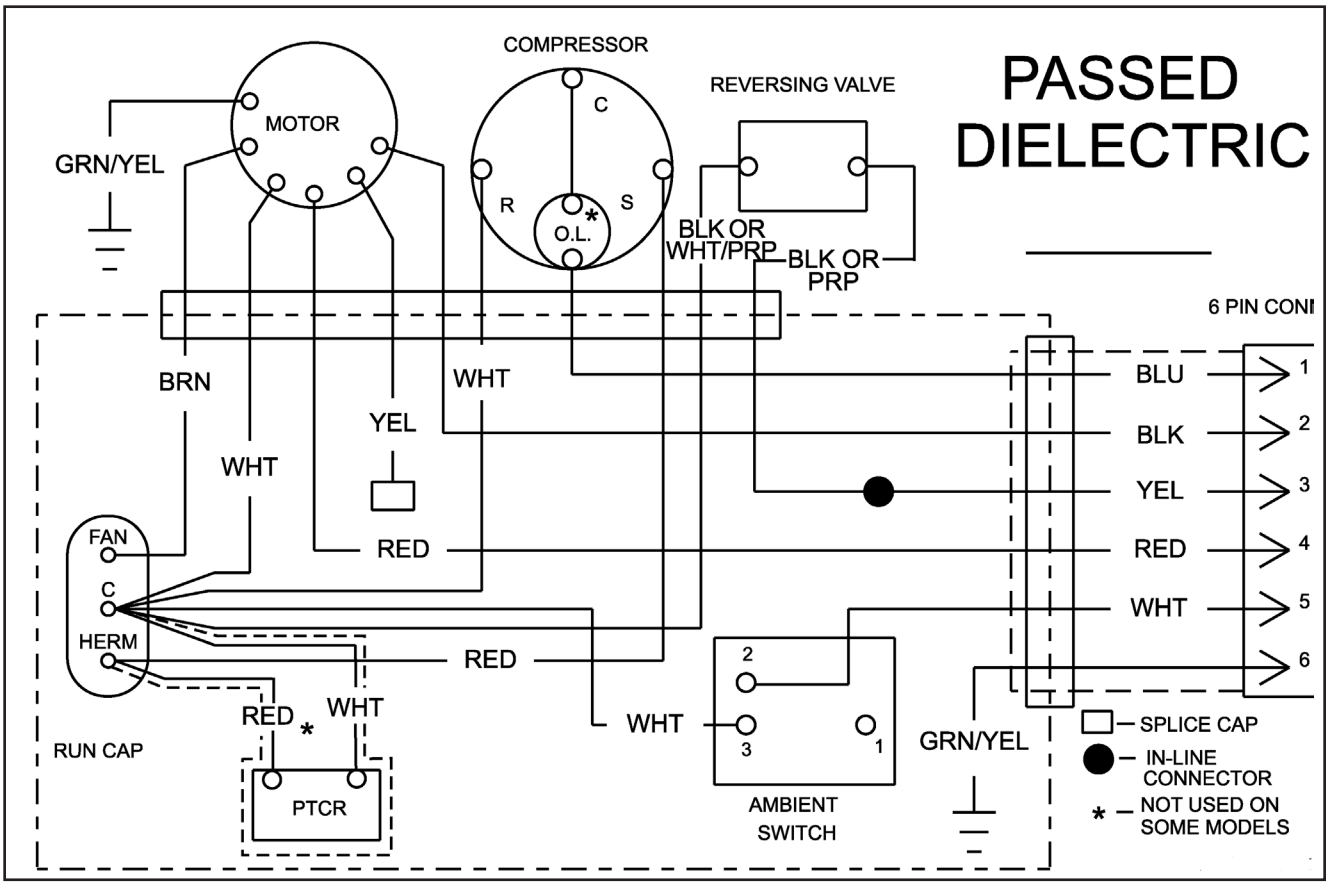

TYPICAL MECHANAL PENGUIN HEAT PUMP WIRING DIAGRAM

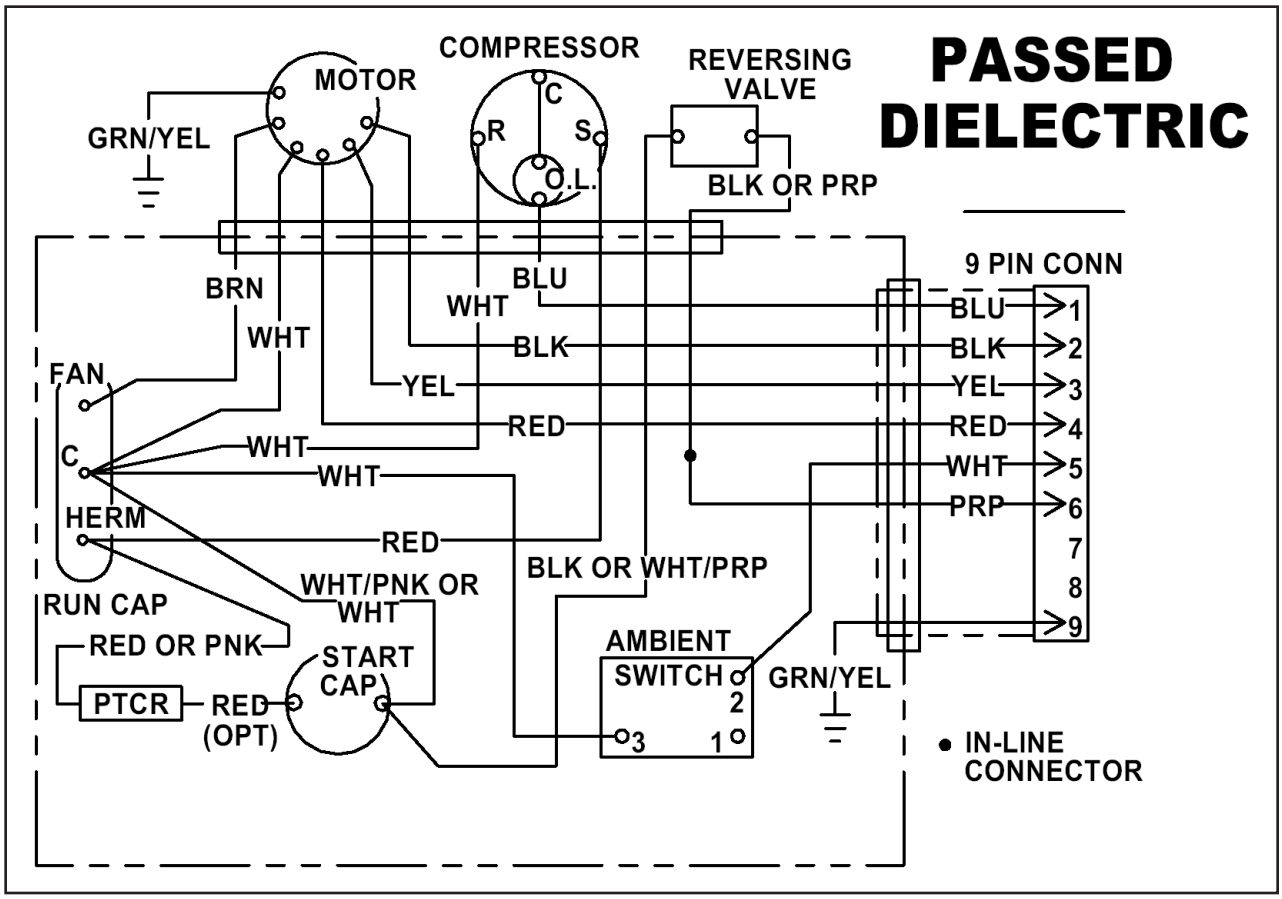

SECTION 3

DC Voltage Requirements

A DC volt supply is required for operation of all Dometic electronic controlled units. Clean Direct Current (DC) power is mandatory for high-tech circuits to operate as designed. A battery will provide straight line DC power. Proper polarity is crucial for operation. The controls must be connected to the power source/battery circuit with two wires of adequate capacity to avoid voltage drop. Do not use the body or chassis of the RV as a substitute for ether of the two conductors. Using the chassis could create erratic operation. The operating range is 10 to 16 volts DC. If DC voltages are outside of the operating range, erratic operation may result. Always check voltage with a load on the system. Use a DC voltmeter to check for the incoming DC voltage between the red positive (+) and the black negative (–) at the connections of the Control Board/Box. If no DC voltage is found, check the supply, wires, breaker or fuses.
Note: No other electrical equipment or lighting should be connected to the AC electronics DC power circuit. (DEDICATED CIRCUIT)

SECTION 4

Components

4.1 Mechanical On/Off Selector Switch

The switch can be checked by using a voltmeter with power turned on or by using an Ohmmeter with power turned off. For safety reasons we suggest you use the Ohmmeter and with power turned off proceed as follows:

A. The air box should still be off. The electrical box needs to be dropped from the template and switch cover removed. Disconnect the wiring from the switch, (be sure to note wire location for proper replacement), and remove it from the electrical box.
B. There are three different selector switches used in the manufacture of the air conditioner. They are the 10-position, 8-position and 5-position switches. A quick check of the air box decal will indicate which switch is in the air conditioner.
C. The switch should be checked with an Ohmmeter to determine if continuity exists. The chart shows the correct terminals to check. Example: Switch is in high cool position the Ohmmeter shows continuity between L1, C and 1.

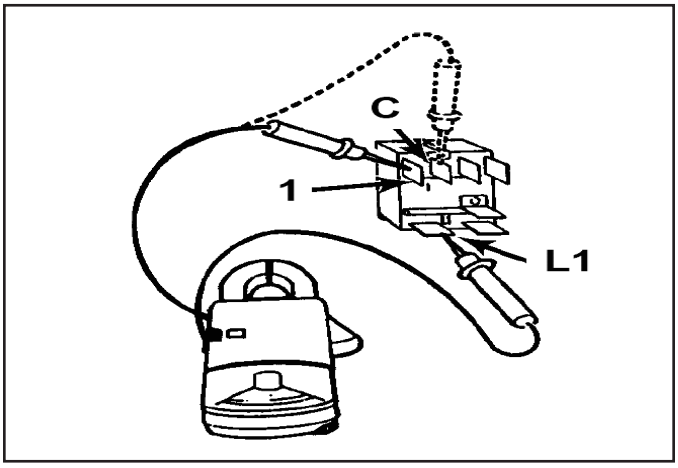

CONTINUITY TEST

SWITCH SETTING	10-Position***	8-Position	5-Position
High Cool	L1, C, 1	L1, C, 1	L1, C, 1
Med. Cool	L1, C, 2	L1, C, 2	L1, C, 2
Low Cool	L1, C, 4	L1, C, 4	L1, C, 4
High Heat	L1, H., 1	NONE *	NONE *
Med. Heat	L1, H., 2	NONE *	NONE *
Low Heat	L1, H., 4	L1, H., 4	L1, H., 4
High Fan	L1, 1	L1, 1	NONE
Med. Fan	L1, 2	L1, 2	NONE
Low Fan	L1, 4	L1, 4	L1, H., 4 **

* Note: Selector switch does not have high or medium heat positions.
** Note: Selector switch has no fan settings. If heat strip is not installed, low heat is same as low fan.
*** Note: Also used for Heat Pump

Note: Terminal locations on back of switch will vary with the manufacturer of the switch. Use white numbers stamped on the body of switch for the terminal number

4.2 Mechanical Thermostats

A. The electrical box needs to be dropped from the template and control box cover removed. Disconnect the wiring from the thermostat, (be sure to note wire location for proper replacement). The thermostat can be checked with an Ohmmeter. (Continuity)
B. Two types of thermostats have been used in the manufacture of our air conditioner: cooling only and heat/cool.
C. The cooling only thermostat is adjusted so the air conditioner will not start the compressor below 65° degrees. In some situations it may be necessary to warm the sensing bulb with your hand or place it in warm water (95° degrees or hotter).
D. When the contact points make connection, continuity should show across the terminals. Failure to show continuity indicates the thermostat is defective.
E. The thermostat will not cycle off if the temperature is above 90° degrees at the sensing tube.

Immersing the sensing bulb in ice water should cause the points to open. Failure to open or break continuity indicates it is defective and should be replaced.

F. The heat/cool thermostat is very similar to the cooling only thermostat except it contains two sets of contacts. When the cooling contacts make connection, the heating contacts break connection. For example, in 90 degree temperature the cooling contacts will be closed (terminals 1 and 2) and the heating contacts open (terminals 2 and 3). Below 65° degrees, the heating contacts (terminals 2 and 3) will be closed and cooling contacts (terminals 1 and 2) will be open. Failure to properly make and break the circuit indicates a defective thermostat.

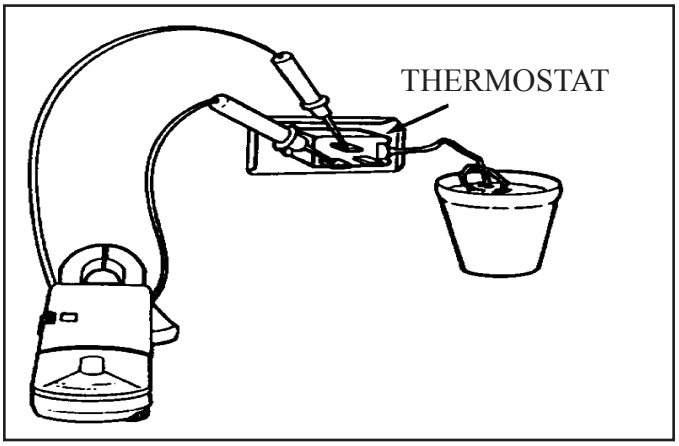

4.3 Change Over Thermostat 59146/650015

A. The Change-over thermostat is a capillary tube/bellows-type switch. Its function is to allow the compressor/fan to operate only when outside ambient is 40° F. +/- 10 % or warmer.

Note: A defective change-over thermostat can keep the compressor/fan from operating in the COOL or HEAT PUMP modes.

B. To check the change-over thermostat, first verify the air temperature at the capillary tube. If the temperatures are above 45° F., continuity should be between terminals 2 to 3 and no continuity between terminals 2 to 1. For temperatures below 40° F., continuity should be between terminals 2 to 1 and no continuity between terminals 2 to 3. The change-over thermostat will break continuity on the white (common) wire when the outside temp reaches approximately 40° F.. No operation at all from the Heat Pump.

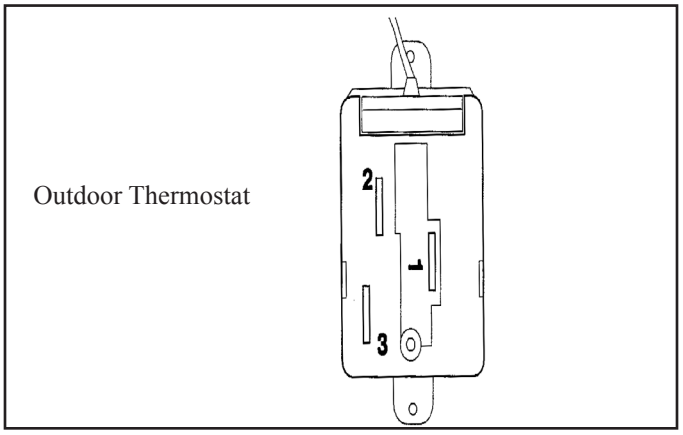

4.4 Analog Thermostats

There are 3 different Analog thermostats being used to control Dometic and Duo-Therm roof top units. Air Conditioners, Air Conditioners with Heat Strips, and Air Conditioners with Heat Pumps. The type of thermostat used depends on the unit and accessories used with it. It is very important for the proper location of the Analog thermostat to ensure that it will provide a comfortable temperature in the RV. (reference T-stat location A22-7B). Improper Location will cause excessive temperature swings and short cycling.

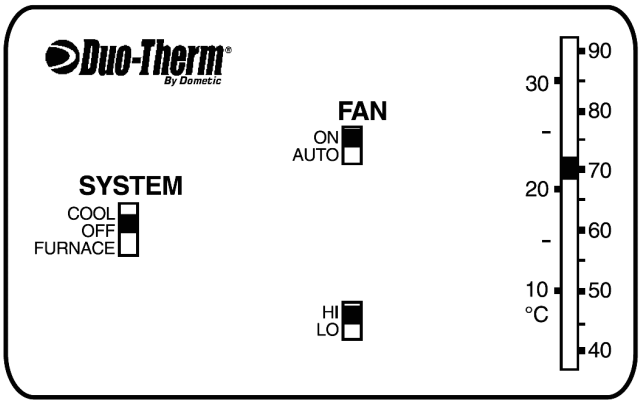

Cool and Furnace

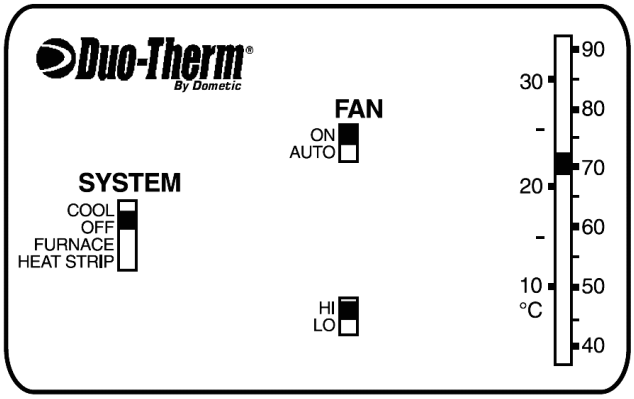

Cool, Furnace and Heat Strip

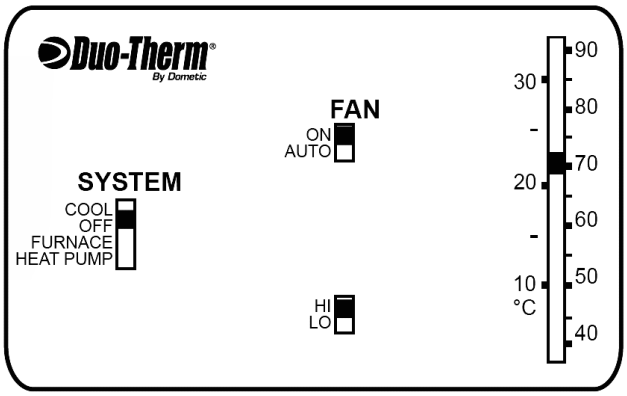

Cool, Furnace and Heat Pump

Analog Thermostat Testing

If nothing operates on the unit, turn the System Switch to "OFF", FAN Auto/On Switch to "AUTO", and FAN HIGH/LOW Switch to "LO". Remove the Analog Thermostat cover and verify the following voltage readings: Verify 12 VDC into upper control board and fuse is good first.

Check for voltage between the GND terminal and:

1. FAN terminal for voltage ranging from 8.38 to 17.31 VDC
2. HI FAN terminal for voltage ranging from 8.38 to 17.31 VDC
3. FUR terminal for voltage ranging from 8.38 to 17.31 VDC.
4. COOL terminal for voltage ranging from 6.73 to 7.53 VDC.
5. HS/HP terminal (present only on heat strip or heat pump models) for voltage ranging from 8.38 to 17.31 VDC.

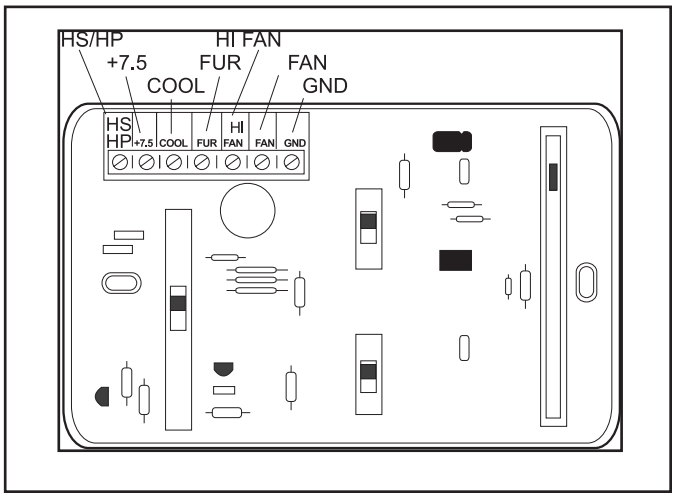

If any one of the volt readings is missing, check T-stat cable to control board. If the voltages shown above are present, use a jumper wire to test unit operation as follows: This test will bypass the function of the thermostat. The thermostat provides a ground to close a relay.

1. LOW FAN, jumper wire between GND and FAN. The unit should operate on Low fan speed.
2. HIGH FAN, jumper wire between GND and FAN and between GND and HI FAN. Two jumper wires required, low fan relay must be closed to pass voltage to high fan relay. The unit should operate on high fan speed.
3. FURNACE, (if furnace connected to the blue/white wires on the Analog Control Box) jumper wire between GND and FUR. The furnace should operate. If not check for continuity between the two blue/white wires at the control board.
4. LOW COOL, jumper wire between GND and FAN and GND and Cool. The compressor should operate and low fan speed.
5. HIGH COOL, jumper wire between GND and FAN, GND and HI FAN and GND and COOL. The compressor should operate and high fan speed.
6. HEAT STRIP, (if unit is so equipped) jumper between GND and FAN and GND and HS/HP. The heat strip should operate and the fan on low speed.
7. HEAT PUMP, (if unit so equipped) jumper between GND and FAN, GND and HS/HP. The heat pump should operate on the low fan speed. If unit operates properly when terminals are jumped, the analog thermostat is defective.

If the compressor is not coming on disconnect the cold control and try again. Keep in mind the 59146 has an change-over thermostat and if the outside temperature is below 40° nothing will operate.

HARNESS BETWEEN T-STAT AND BOARD.

Wiring harness between control and t-stat is not a Dometic part. The thermostat cable connects the Analog Thermostat to the Analog control box/board. The HEAT/COOL only application requires only six conductors. The COOL/FURNACE/HEATSTRIP and the COOL/FURNACE/HEAT PUMP models require seven conductors. It is common for most manufactures to install a seven or eight conductor thermostat cable. A shorted or open cable will cause erratic or no operation.

4.5 COMFORT CONTROL CENTER T-STAT

The Comfort Control Center is the component that makes all the decisions for operation depending on the system and the accessories connected to it. The location of the Comfort Control Center is very important if it is being used without a remote sensor. Location will cause excessive temperature swings (reference T-stat location A22-7B) . If the remote sensor is used for all zones, the Comfort Control Center can be located anywhere that is convenient.

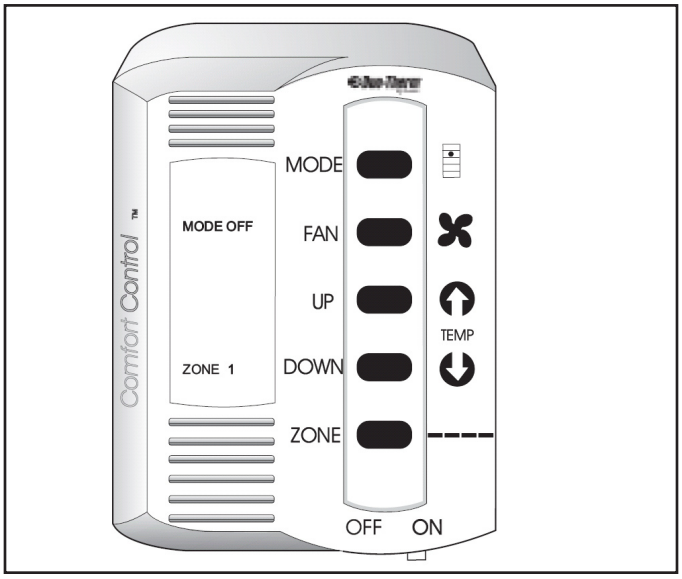

To check the Comfort Control Center,

Check in coming DC voltage and polarity at the main control in the upper unit at the RED positive and BLACK negative wires. Control voltage should be 10 to 16 Volts DC.

Check for voltage on both sides of 3 Amp fuse at the control board.

Check the output voltage at the thermostat by using the telephone wall jack. One end of the cable is plugged into the A/C power module/electronic control box RJ-11-6C4P jack. The Comfort Control Center end is plugged into the telephone wall jack. Use a DC voltmeter to test for DC power between the red and black terminals.

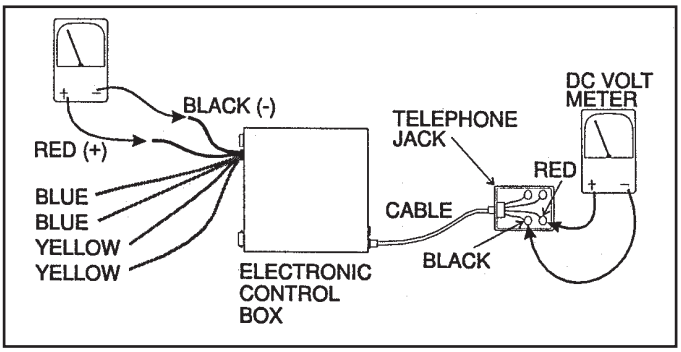

To check DC voltage at the thermostat , remove from mounting bracket. At the back side of the thermostat above the RJ-11-6C4P jack are four solder points where DC input can be checked.

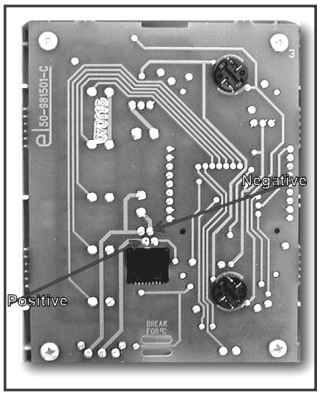

If voltage at control board and control voltage at T-Stat, do a system RESET on the CCC.

A. Turn the ON/OFF switch to “OFF” position.
B. Simultaneously depress and hold the MODE and ZONE push-buttons while turning the ON/OFF switch to “ON”. FF should appear in the LCD display until the MODE and ZONE push-buttons are released. If EE appears when the buttons released, do the reset again. If EE keeps coming back there is a communication problem with the cable.
C. When a dip switch is turned on or off after initial configuration, a system reset will need to be done before the Comfort Control Center will recognize the updated selection. Any time a component is added or removed it would be best to do a reset. There are no repairs to be done to the Comfort Control Thermostat.

If the following items test OK change the Thermostat.

A. DC volts correct at control board and thermostat.
B. No other DC appliances hooked to DC power wires to the Comfort Control system. (DEDICATED CIRCUIT)
C. The DC volts powering the control system could/may have a strange sine-wave creating erratic operation/behavior. Try a different DC power source and do a reset and test.
D. Control board, temperature sensors (freeze-remote-ambient UNPLUGGED) test OK.
E. Cable assembly test OK.
F.. Total cable runs not longer than 75 foot total.
G. Configuration correct.

4.6 CCC 2 T-STAT

The Comfort Control 2 is the component that makes all the decisions for operation depending on the system and the accessories connected to it. The location of the Comfort Control 2 is very important if it is being used without a remote temperature sensor. Location will cause excessive temperature swings (reference T-stat location A22-7B) . If the remote sensor is used for all zones, the Comfort Control 2 can be located anywhere that is convenient.

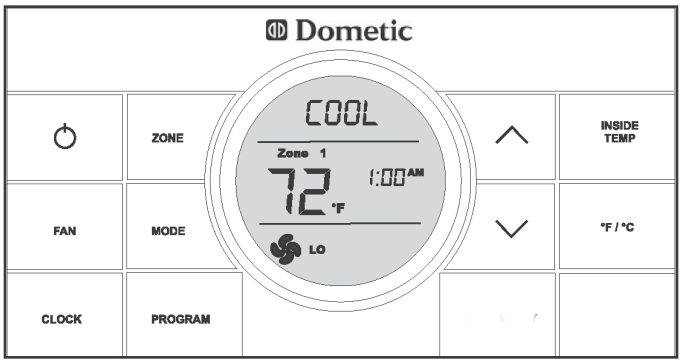

To check the CCC 2 No Operation
First always System Initialization.
The system initialization shall be initiated with the thermostat turned “OFF” (Either a blank display or clock only showing). Simultaneously press and hold the MODE and ZONE buttons. The LCD will display “IniT” and all available zones. Release the MODE and ZONE buttons. Press the ON/OFF button to exit. Check in coming DC voltage and polarity at the main control in the upper unit at the RED positive and BLACK negative wires into control from the coach. Control voltage should be 10 to 16 Volts DC. Check the output voltage at the thermostat by using the telephone wall jack. One end of the cable is plugged into the A/C power module/electronic control box RJ-11-6C4P jack. The Comfort Control 2 end is plugged into the telephone wall jack. Use a DC voltmeter to test for DC power between the two center wires in the cable. red and black terminals depending how the cable is wired. In the communication cable the two center wires are the 12 volt positive and negative. Normaly the Green is the Positive and the Red is the negative. If you have voltage going into the CCC 2 and the unit will not light up the t-stat could be the problem. Before condemning the t-stat

A. Check the harness from AC to T-stat
B. Disconnect other AC/HP units
C. Turn all Dip Switches to off
D. Try straight line DC voltage

If you have good straight line DC volts, cables good and all dip switched ok and the t-stat will not light up, replace.

4.7 SINGLE ZONE LCD T-STAT

There are 3 different Single Zone LCD thermostats being used to control Dometic and Duo-Therm roof top units. Air Conditioners, Air Conditioners with Heat Strips, and Air Conditioners with Heat Pumps. The type of thermostat used depends on the unit and accessories used with it. It is very important for the proper location of the Single Zone LCD thermostat to ensure that it will provide a comfortable temperature in the RV. (reference T-stat location A22-7B). Improper Location will cause excessive temperature swings and short cycling.

First thing when trouble shooting the T-stat is System Initialization (RESET), this will restore communication and Factory Default settings. System initialization is performed with the thermostat turned "off". Press and hold the "mode" & "+" buttons until the display shows"- -". Press the "mode" button once to exit the system initialization mode.

To check the Single Zone LCD T-sat for no Operation check in coming DC voltage and polarity at the main control in the upper unit at the RED positive and BLACK negative wires into control from the coach. Control voltage should be 10 to 16 Volts DC. Test/check harness between A/C power module/electronic control box the other end of harness to the T-stat. Check the voltage to the thermostat terminals at the T-stat 12V + positive and 12V - negative. Before condemning the t-stat.

A. Try System Initialization
A. Check the three wires from AC/HP to t-stat
B. Try straight line voltage
C. Unit wired proper per diagram

If you have good straight line DC volts, harness test good and and the t-stat will not light up, replace T-stat.

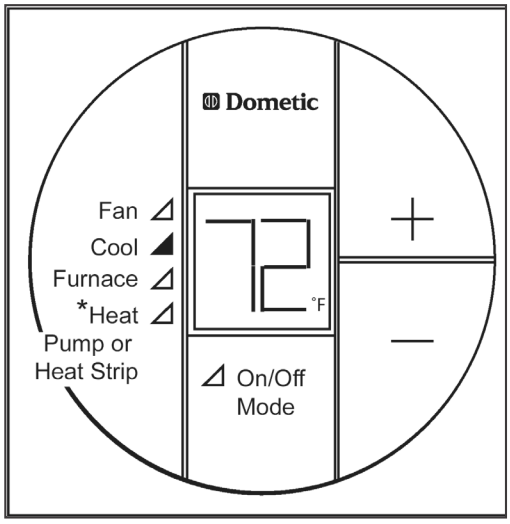

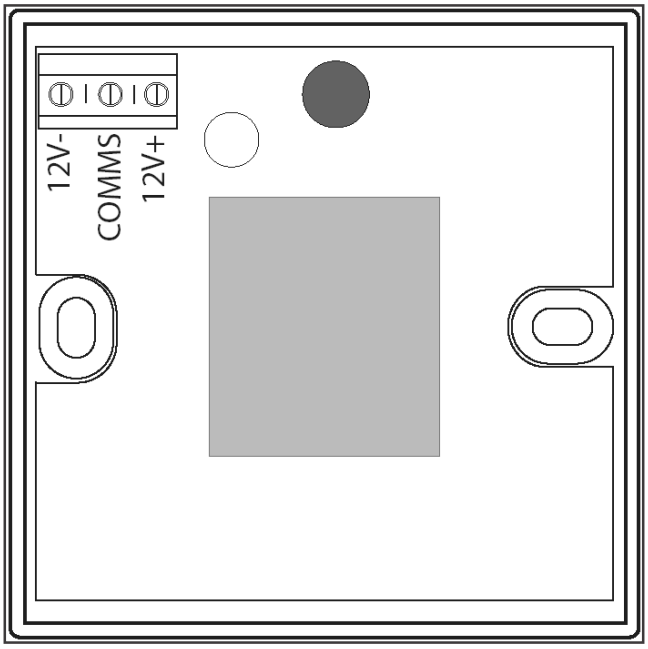

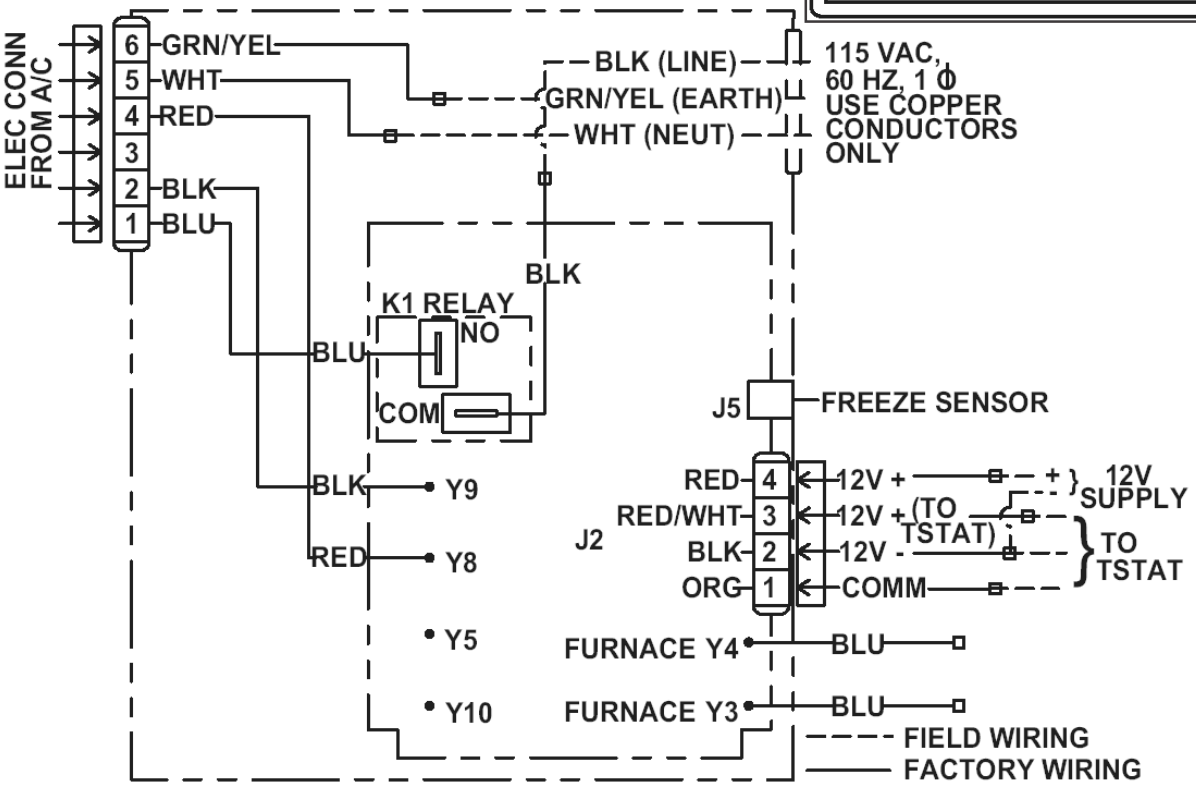

NOTE: There is no DC fuse on the main control board, if the DC control amperage exceeds 1.5 to 3 amps the DC voltage will be shut down. To reset the PTC disconnect the DC power source positive wire for 30 seconds and reconnect.

4.8 CCC & CCC2 CABLE ASSEMBLY

A flat control cable must be routed from the unit to the Comfort Control. It must be 26 gauge, stranded copper wire, four (4) conductors (yellow, green, red, and black). The cable must be terminated with a four (4) position telephone RJ-11-6C4P (preferred) connector.

Note: Do not use a pre-made telephone extension cable. The order of the connectors is reversed and will cause a failure of the system. Both ends of the harness should be wired the same.

If a telephone extension cable is used it will not light up the thermostat. Dometic does not provide the cable for the Comfort Control system. The cable is provided at time of install. A cable tester available 3107127.007.

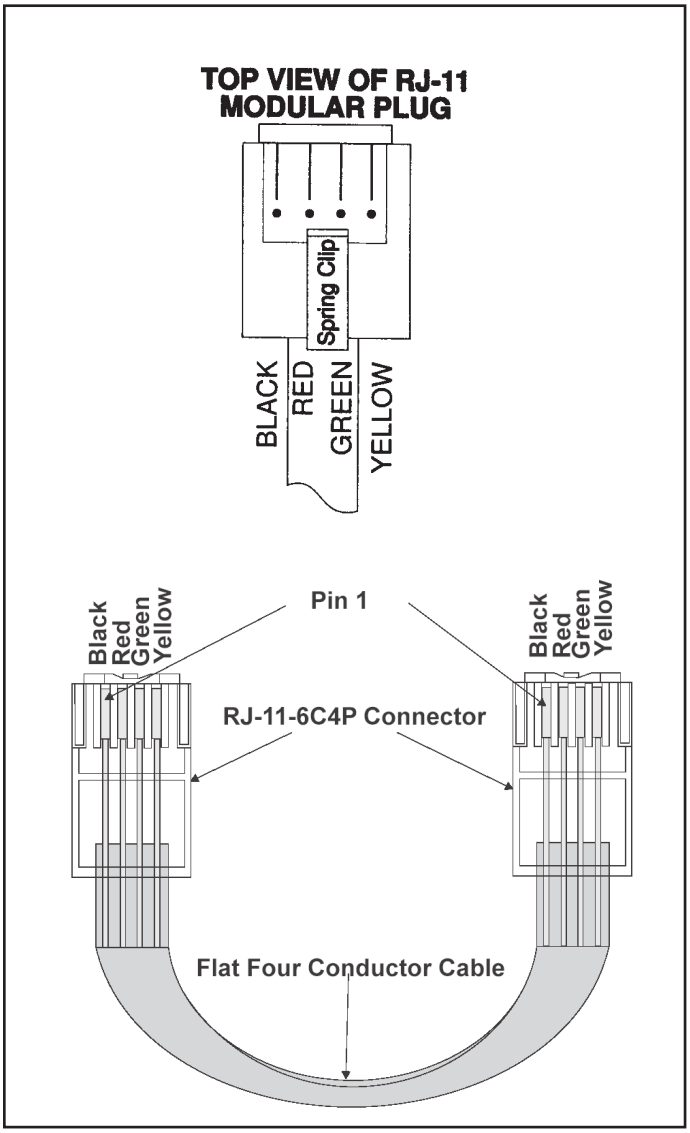

CONTROL BOARDS

4.9 Analog Power Module

The Analog Control Box comes in 3 different configurations that are not interchangeable. The Analog Control Board consists of several relays, plug receptacles and other components. If any one of these is defective the entire Analog Control Box should be replaced. The Analog Control Box/Board works with the Analog Thermostat to change or switch AC circuits that control the operation of the Duo-Therm Unit.

⚠ WARNING

This is an energized circuit. Shock can occur if not tested properly. Testing is to be done by a qualified service technician.

Air Conditioning

To verify circuits are being completed by the Analog Control board/box, you would first disconnect the 6-pin plug connector from the Analog Control Box. Using a 120 volt AC incandescent Bulb, check from terminal 5 (white-common) to the other terminals to determine if a particular circuit is completed through the Analog Control Box.

When the thermostat calls for that function and the Circuit is completed the light will illuminate.

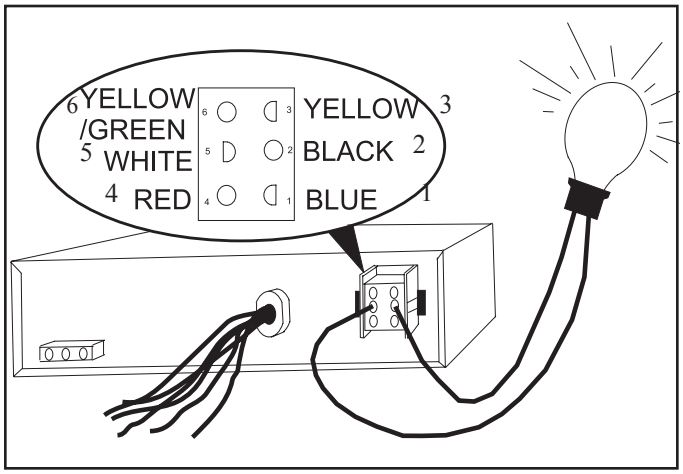

Terminal

1. Is a blue wire and the compressor circuit.
2. Is a black wire and the High Fan circuit.
3. Is a yellow wire and not used.
4. Is a red wire and the Low Fan circuit.
5. Is a white wire and the common AC connection.
6. Is a green/yellow wire and chassis ground.

If the compressor is not coming on disconnect the cold control and try again.

Note: DO NOT use a voltmeter to do these checks as it will give erroneous readings.

If the circuit is completed (light illuminating) and a component is not operating, the problem is in the rooftop unit/wire harness.

Furnace

To verify circuits are being complete by the Analog control board/box, slide System Switch to Furnace and slide the Temperature Set Lever to maximum temperature level.

There should be continuity thru the two blue/white wires at the control board/box. Before condemning the control board/box, verify DC voltage, t-stat and cable OK.

Air Conditioners with Heat Strip

⚠ WARNING

This is an energized circuit. Shock can occur if not tested properly. Testing is to be done by a qualified service technician.

Controlling the compressor and fan speeds same as before. To verify heat strip operation disconnect the 3- pin plug on the control and using a 120 volt AC Bulb, check from terminal 1 to terminal 3 (white-common). If the circuit is completed the bulb will illuminate.

Note: DO NOT use a voltmeter to do these checks as it will give erroneous readings.

If the circuit is completed and a component is not operating, the problem is in the heat strip.

Roof Top Heat Pump

⚠ WARNING

This is an energized circuit. Shock can occur if not tested properly. Testing is to be done by a qualified service technician.

To verify circuits are being completed by the Analog control board/box, you would first disconnect the 6-pin plug connector from the Analog Control Box. Using a 115 volt AC incandescent bulb, check from terminal 5 (white-common) to the other terminals to determine if a particular circuit is completed through the Analog Control Box. If the circuit is completed, the light will illuminate.

Terminal

1. Is a blue wire and the compressor circuit.
2. Is a black wire and the High Fan circuit.
3. Is a yellow wire and reversing valve circuit.
4. Is a red wire and the Low Fan circuit.
5. Is a white wire and the common AC connection.
6. Is a green/yellow wire and chassis ground.

Note: DO NOT use a voltmeter to do these checks as it will give erroneous readings. If the circuit is completed (light bulb coming on) and a component is not operating, the problem is in the rooftop unit/wire harness.

4.10 COMFORT CONTROL MAIN POWER MODULE

Note: The 5 button thermostat will only work with the control board that has 8 dip switches. The 4 button thermostat will only work with the control board that has 5 dip switches. The two different systems are not compatible.

The AC power module board consists of a relay, dip switches, plug receptacles and other electrical components. If any one of these are defective the complete AC Control Box (some models only AC power module) must be replaced. The 3 amp fuse is the only replaceable part on the module board. The board receives messages from the Comfort Control Center, and completes AC circuits to operate the unit. Before diagnosing the AC power module, make sure the Configuration, Cable assembly, Remote Sensor, Freeze Control, Ambient Sensor, DC/AC voltages and operation has been checked and is correct.

⚠ WARNING

This is an energized circuit. Shock can occur if not tested properly. Testing is to be done by a qualified service technician.

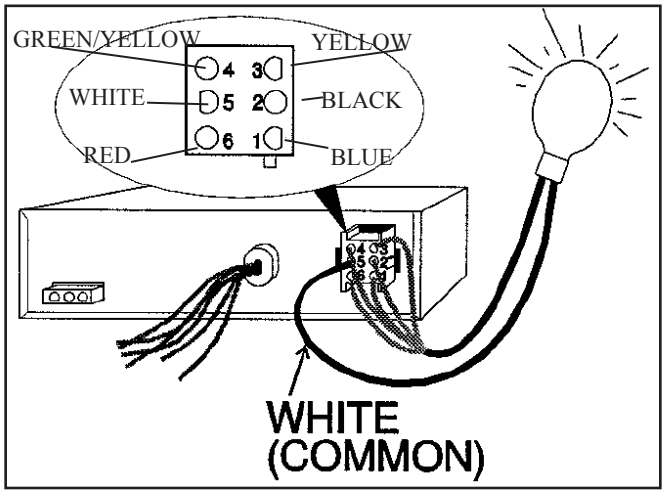

When the thermostat calls for that function and the Circuit is completed the light will illuminate.

Using a 120 volt AC incandescent Bulb, check from terminal 5 (white-common) to the other terminals to determine if a particular circuit is completed through the Comfort Control Box. When the thermostat calls for that function and the Circuit is completed the light will illuminate. The operation of the AC control box can be checked at the 6-pin plug connection. Disconnect the unit and use a 115 volt light bulb to check from terminal 5 (the white or common wire) to:

Terminal
1. Is a blue wire and the compressor circuit.
2. Is a black wire and the High Fan circuit.
3. Is a yellow wire and medium speed/heat pump.
4. Is a red wire and the Low Fan circuit.
5. Is a white wire and the common AC connection.
6. Is a green/yellow wire and chassis ground.

If the circuit is completed the light bulb will illuminate.
To verify HEAT STRIP operation disconnect the 3- pin plug on the control and using a 120 volt AC Bulb, check from terminal 1 to terminal 3 (white-common). If the circuit is completed the bulb will illuminate.
Note: Do not use a voltmeter to do the above tests as it will give erroneous readings. If the circuit is competed (light bulb coming on) to a particular component and that component will not operate, the problem is in the roof top unit/wire harness.

Furnace Blue Wires
In furnace mode there should be continuity between the two blue wires. If no continuity unplug the remote temperature sensor from the control board and test again. Any time there is a remote temperature sensor plugged to the main board, unplug the remote temperature sensor wait a few minutes and try again. A remote temperature sensor that is partially shorted might satisfy the control system and not allow the furnace to come on.

Yellow Wires (Load Shed)
If the load shed option is to be used, wires must be run from the load shed control to the Dometic A/C. If the compressor is not coming on disconnect the yellow wires if hooked up to the load management system. When the yellow wires touch each other or go to ground the compressor will not run.

If the compressor is not coming on disconnect the yellow wires, cold control, remote temperature sensor and wait 2 minutes and try again.

Heat Pump Power Module
The way the Comfort Control knows it is a heat pump it looks for ohms resistance in the red two pin connector at the main power board. If there is nothing in the red connector the system will operate in the heat mode when the compressor comes on the system does not know to send voltage to the valve for AC operation. In the air conditioner mode the control board sends AC voltage to the valve. The operation of the AC control box can be checked at the 6-pin plug connection. When the Comfort Control Center is set to operate the heat pump the fan will operate in the low speed only in the Auto fan mode. Disconnect the unit and use a 115 volt light bulb to check from terminal 5 (the white or common wire) to:

Terminal
1. Is a blue wire and the compressor circuit.
2. Is a black wire and the High Fan circuit.
3. Is a yellow wire and reversing valve - this wire is energized in cooling mode and not energized in the heat pump mode.

Terminal
4. Is a red wire and the Low Fan circuit.
5. Is a white wire and the common AC connection.
6. Is a green/yellow wire and chassis ground.

If the circuit is completed the light bulb will illuminate.
Note: Do not use a voltmeter to do the above tests as it will give erroneous readings. If the circuit is completed to a particular component and that component will not operate, the problem is in the roof top unit. If the compressor is not coming on disconnect the cold control, remote temp sensor and try again.

4.11 Single Zone LCD Power Module

The Single Zone LCD Control box/board comes in 3 different configurations that are not interchangeable. The Single Zone LCD board consists of relays, plug receptacles and other components. If any one of these is defective the entire Single Zone LCD box/board should be replaced. The Single Zone LCD box/board works with the Single Zone LCD Thermostat to change or switch AC circuits that control the operation of the Dometic Duo-Therm Unit. The board receives messages from the Single Zone LCD thermostat, and completes AC circuits to operate the unit. Before diagnosing the AC module, make sure the proper thermostat is used, Harness to t-stat is in good condition, Remote Sensor, Freeze Control, Ambient Sensor, DC/AC voltages ok and operation has been checked. First try straight line DC voltage as the power source..
NOTE: There is no DC fuse on the control board, if the DC control amperage exceeds 1.5 to 3 amps the DC voltage will be shut down. To reset the PTC disconnect the DC power source positive wire for 30 seconds and reconnect.

⚠ WARNING

This is an energized circuit. Shock can occur if not tested properly. Testing is to be done by a qualified service technician.

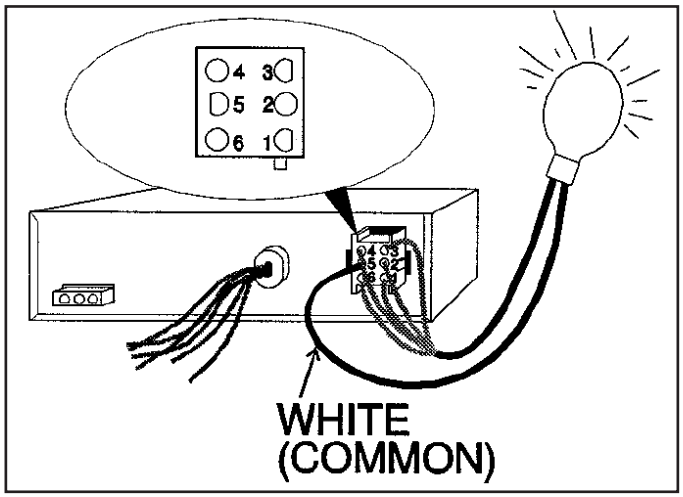

To verify circuits are being completed by the Single Zone LCD control board/box, you would first disconnect the 6-pin plug connector from the Single Zone Control Box. Using a 115 volt AC incandescent bulb, check from terminal 5 (white-common) to the other terminals to determine if a particular circuit is completed through the Single Zone Control Box. If the circuit is completed, the light will illuminate.

Terminal
1. Is a blue wire and the compressor circuit.
2. Is a black wire and the High Fan circuit.
3. Is a gray wire and reversing valve circuit.
4. Is a red wire and the Low Fan circuit.
5. Is a white wire and the common AC connection.
6. Is a green/yellow wire and chassis ground.

Note: DO NOT use a voltmeter to do these checks as it will give erroneous readings. If the circuit is completed (light bulb coming on) and a component is not operating, the problem is in the rooftop unit/wire harness.

To activate the curcuits you can use the Dianostic Mode.

Diagnostics shall be initiated with the thermostat turned "OFF". To enter the diagnostic mode, simultaneously press the "Mode", "+" and "-" buttons. When the system is in the diagnostic mode, the display shows the diagnostic
commands, starting with "00". Diagnostic commands are then selected by pressing the "+" or "-" buttons. To exit the diagnostic mode and return to the "OFF" position, press the Mode button. Diagnostic command information is provided in the table below. NOTE: 120 second compressor delay is disabled while in the diagnostic mode!

First always System Initialization.
Use the system initialization mode to restore the Factory Defaults. System initialization is performed with the thermostat turned "off". Press and hold the "mode" & "+" buttons until the display shows"- -". Press the "mode" button once to exit the system initialization mode.

Factory Preset/Default Settings

Heating	68ºF / 20ºC
Cooling	72ºF / 22ºC
Fan Speed	Auto
Mode	Off
Furnace Differential	2ºF

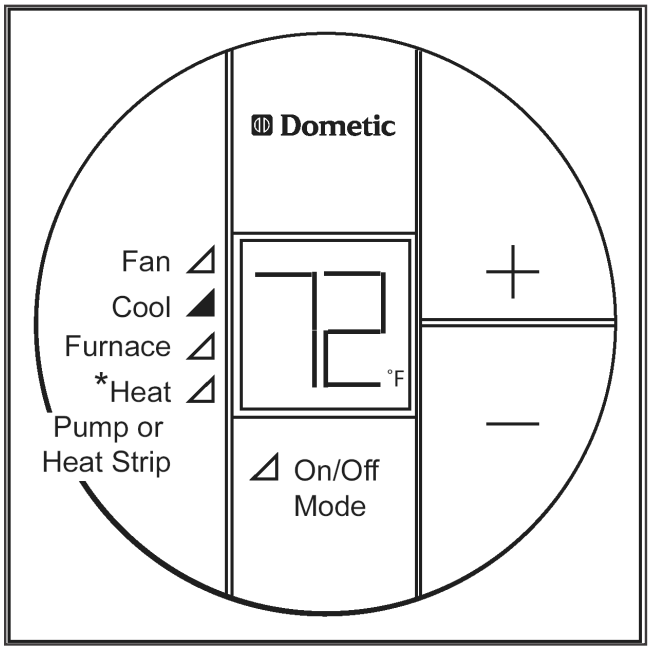

Diagnostic Command	Description	Comment
00	All outputs OFF	
01	Low Speed Fan ON	AC VOLTS TO RED & WHITE WIRES
02	High Speed Fan ON	AC VOLTS TO BLACK & WHITE WIRES
03	Compressor ON	AC VOLTS TO BLUE & WHITE WIRES
04	Furnace Output On	CONTINUITY BETWEEN 2 MALE SPADES/ BLUE/WHITE WIRES ON HEAT STRIP CONTROL BOX
05	Reversing Valve ON (Heat Pump Version Only)	AC VOLTS TO GRAY & WHITE WIRE
06	Heat Strip ON (Heat Strip Version Only)	AC VOLTS TO GRAY & WHITE WIRES ON 3 WIRE CONNECTOR
07	LCD shows Room Temperature	OR E2 IF OUT OF RANGE / E3 IF THERMISTOR SHORTED
08	LCD showa inside Coil Temperature (Cold Control)	OR E5 IF MISSING/OPEN
09	LCD showa Outdoor Temperature (Heat Pump Version only)	OR E4 IF MISSING/OPEN

LCD Error Codes

E1	Loss of communication “Causes Relay Control Module to shut down”	“No operation of any systems”
E2	Indoor room Air Sensor Open/Out of range. “No Heat or Cool operations”	“Fan only mode still operates”
E3	Indoor room Air Sensor is shorted. “No Heat or Cool operations”	“Fan only mode still operates”
E4	Outdoor Temperature Sensor is Open/Out of range. (Heat pump version only) “No Heat Pump operation”	“Air Conditioner, Furnace & fan modes will still operate”
E5	Freeze Sensor Open/Out of Range “No Cool operation”	“Furnace, Heat Strip, Heat Pump & Fan modes will still operate”

4.12 CCC2 Power Module

The CCC2 power module board consists of a relays, dip switches, plug receptacles and other electrical components. If any one of these are defective the complete CCC2 Control Box (some models only AC power module) must be replaced. The board receives messages from the CCC2 and completes AC circuits to operate the unit. Before diagnosing the CCC2 power module, make sure the Configuration, Cable assembly, Remote Sensor, Freeze Control, Ambient Sensor, DC/AC voltages and operation has been checked and is correct.

NOTE: There is no DC fuse on the control board, if the DC control amperage exceeds 1.5 to 3 amps the DC voltage will be shut down. To reset the PTC disconnect the DC power source positive wire for 30 seconds and reconnect.

⚠ WARNING

This is an energized circuit. Shock can occur if not tested properly. Testing is to be done by a qualified service technician.

First SYSTEM INITIALIZATION or reset.
The system initialization shall be initiated with the thermostat turned “OFF” (Either a blank display or clock only showing). Simultaneously press and hold the MODE and ZONE buttons. The LCD will display “IniT” and all available zones. Release the MODE and ZONE buttons. Press the ON/OFF button to exit. The system initialization shall be initiated anytime unit has erratic operation, control board /t-stat is changed or dip switches are changed.

The operation of the AC control box can be checked at the 6-pin plug connection or male spades on main board. Disconnect the unit and use a 115 volt light bulb to check from terminal 5 (the white or common wire) to:

When the thermostat calls for that function and the circuit is completed the light will illuminate. Using a 120 volt AC incandescent Bulb, check from terminal 5 (white-common) to the other terminals to determine if a particular circuit is completed through the CCC2 Box. When the thermostat calls for that function and the Circuit is completed the light will illuminate.

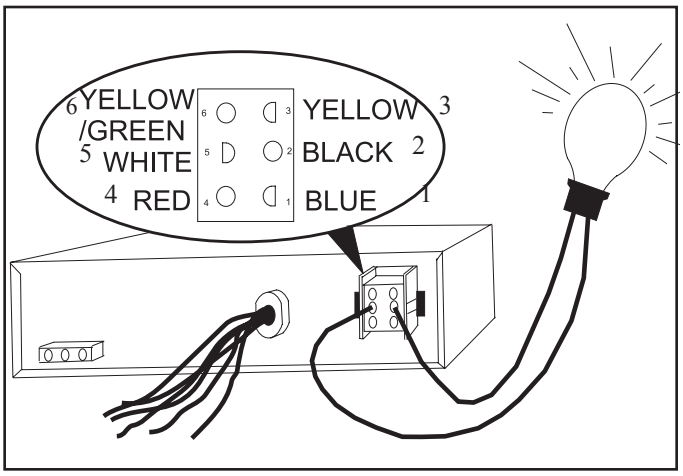

Note: DO NOT use a voltmeter to do these checks as it will give erroneous readings. If the circuit is completed (light bulb coming on) and a component is not operating, the problem is in the rooftop unit/wire harness.

Terminal
1. Is a blue wire and the compressor circuit.
2. Is a black wire and the High Fan circuit.
3. Is a yellow wire and Medium
4. Is a red wire and the Low Fan circuit.
5. Is a white wire and the common AC connection.
6. Is a green/yellow wire and chassis ground.

The 3 pin connector is for the Heat strip or reversing valve. Two outside wires Heat Strip White (common) Grey hot.
Center wire Hot orange reversing.

To activate and check the curcuits use the Dianostic Mode.

The Diagnostic mode shall be initiated with the thermostat turned “OFF” (Either a blank display or clock only showing). To enter the diagnostic mode, simultaneously press the “Program”, “Fan” & “F/C” buttons. When the system is in the diagnostic mode, the display backlight shall be on continuously. The LCD will show “dIGN”, the zone and the two digit number for diagnostic command. The only active push buttons in the diagnostic mode shall be “zone”, “up”, “down” and “ON/OFF”. Diagnostic commands are selected by pressing the “up” or “down” buttons. To exit the diagnostic mode, press the ON/OFF button. Diagnostic command information is provided in the table below.

Diagnostic Command	Description	Comment
00	All Outputs OFF	
01	Low Speed Fan ON	RED & WHITE WIRES
02	Medium Speed Fan ON	YELLOW & WHITE WIRES
03	High Speed Fan ON	BLACK & WHITE WIRES
04	Reversing Valve ON	3 PIN PLUG CENTER WIRE ORANGE
05	Compressor ON	BLUE & WHITE WIRES
06	Heat Strip ON	3 PIN PLUG GRAY & WHITE
07	Furnace Output ON	CONTINUNITY 2 BLUE WIRES
08	Load Shed output ON	CONTINUNITY 2 YELLOW WIRES
09	LCD Shows Indoor Temperature T-stat or Remote Sensor	E2 IF MISSING, E3 IF SHORTED
10	LCD shows Outdoor Temperature	E4 IF MISSING
11	LCD shows Evaporator Coil Temperature	E5 IF MISSING
12	LCD shows 120 VAC status	‘ON’ or ‘-- --’
13	LCD shows Load Shed Status	‘ON’ or ‘-- --’
14	LCD shows Stage DIP Switch Position	‘ON’ or ‘-- --’
15	LCD shows Heat Strip DIP Switch Position	‘ON’ or ‘-- --’
16	LCD shows Heat Pump DIP Switch Position	‘ON’ or ‘-- --’
17	LCD shows Furnace DIP Switch Position	‘ON’ or ‘-- --’
18	LCD shows Dehumidifier DIP Switch Position/Not used	‘ON’ or ‘-- --’
19	LCD shows Gen Start DIP Switch Position	‘ON’ or ‘-- --’
20	LCD shows Ext Stage DIP Switch Position	‘ON’ or ‘-- --’

CCC2 Error Codes

E1	Loss of communications “Causes Relay Control Module to shut down”	Two power module DIP switches set as same zone. Communication cable. Try direct DC from battery.
E2	Room Air Sensor Open Circuit or Out of Range “No Heat, Cool or Dehumidify operation”	Unlikely to occur; if no Remote Sensor, CCC2 sensor is used. Useful in Diagnostic Mode to test if Remote Sensor is installed on zone or open. Test Remote Sensor
E3	Room Air Sensor Short Circuit “No Heat, Cool or Dehumidify operation”	Error shown if either Remote Sensor or CCC2 sensor is shorted
E4	Outdoor Ambient Sensor is Open or Out of Range “No Heat Pump Operation”	Test Ambient Sensor. Out of Range would be over 190 F
E5	Freeze Sensor is Open or Out of Range	Test Freeze Sensor
E6	Open Circuit Humidity Sensor	Dehumidify operation is inhibited not used on current units NLA
E7	120 VAC not Detected	120 second delay to allow for GEN START operation All 120 VAC relays switched OFF (Furnace Relay not affected)
E8	Invalid Zone Configuration “No Heat, Cool or Dehumidify operation on affected zone”	Heat Pump & Heat Strip selected on same zone. Not allowed.
E9	Invalid Zone Configuration No Heat, Cool or Dehumidify operation on affected zone”	Dehumidify & Heat Pump or Heat Strip selected

4.13 Start Device

⚠ WARNING

This is an energized circuit. Shock can occur if not tested properly. Testing is to be done by a qualified service technician.

4.13.1 PTCR

The positive temperature coefficient resistor or PTCR has replaced the compressor start relay and the start capacitor on some models. It should be checked in two different ways: First check continuity. Turn the air conditioner circuit breaker to "OFF". Disconnect the PTCR from the circuit. Check for continuity. If there is no continuity, replace PTCR. The second check to take is an amperage reading. Clamp an ammeter around the wire from the PTCR to the capacitor/compressor. Turn the air conditioner circuit breaker to "ON" and start the air conditioner. When the compressor starts, there will be an amperage reading for approximately one second or less. If there is no reading, or if there is a prolonged reading, the PTCR or start relay is faulty and must be replaced.

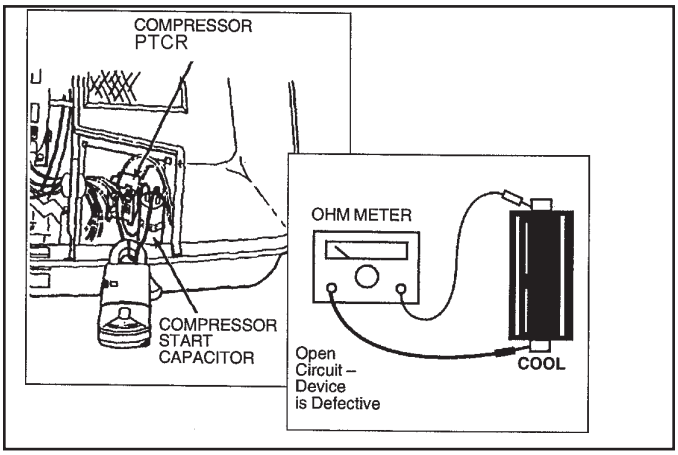

4.13.2 START RELAY

⚠ WARNING

This is an energized circuit. Shock can occur if not tested properly. Testing is to be done by a qualified service technician.

The start relay or potential relay has a coil with very high resistance. The energizing current will only show through the coil when it exceeds line voltage. The increased voltage is generated by the rotor turning in the winding of the compressor. The relay contact points are normally closed in a de-energized circuit. When power is applied to the compressor, the relay contacts allow current flow to the start capacitor and the compressor starts to turn. When the compressor nears operating speed, a counter-voltage is generated. When the counter-voltage exceeds line voltage, the start relay coil will energize and contact points open.

The start capacitor is then removed from the circuit. To check the start relay, put an amp meter around one of the start capacitor leads. When the power is applied to the compressor, an amperage should show on the meter for approximately one second or less. If the meter did not show any amperage reading when power was applied to the compressor, it means the start relay has open contact points or the start capacitor is bad. When there are bad contacts or a bad start capacitor, the compressor may not run. It may "hum" for 15 seconds and trip-out on overload. When the amp meter shows a continuous current flow, the contact points are stuck closed or the relay coil is open. The compressor will start and run during this condition; however, it will never reach full RPM's and "hum" loudly. The overload will shut it down in approximately 30 seconds from excessive amp draw. This condition can also cause start capacitor failure. It is a good idea to replace the start capacitor whenever you find a relay with stuck contact points. When you replace a start relay, the replacement should be an exact duplicate of the original or compressor damage may result.

Note: Low voltage will shorten the life of the PTCR and start relay.

4.14 Capacitors

Dometic Duo-Therm Air Conditioners and Heat Pumps use three different capacitors: 1) compressor run capacitor 2) compressor start capacitor and 3) fan/blower capacitor. On some units the compressor run and fan/blower capacitor are in the same case. The run and start capacitor must be manually discharged. The run and start capacitor should be checked with a capacitor tester. Follow the tester manufacturer's testing procedures. In the past, it has been recommended to discharge capacitors using a VOM, however modern VOM's have a high impedance that makes this process ineffective. To maintain a safe working environment and protect yourself from shock, service technicians should use a capacitor discharge tool to remove the electrical current. Commercial capacitor discharge tools, or discharge sticks as they are sometimes called, can be purchased for this task.

⚠ WARNING

This is an energized circuit. Shock can occur if not tested properly. Testing is to be done by a qualified service technician.

4.14.1 Run Capacitor

The run capacitor should be checked with a capacitor tester for proper microfarads. In the past, it has been recommended to discharge capacitors using a VOM, however modern VOM's have a high impedance that makes this process ineffective. To maintain a safe working environment and protect ourselves from shock, service technicians should use a capacitor discharge tool to remove the electrical current.

Commercial capacitor discharge tools, or discharge sticks as they are sometimes called, can be purchased for this task. Follow the tester manufacturer's testing procedures. The combination run capacitor has three terminals. The terminals are marked "F.", "C" and "HERM". To check the combination run capacitor, follow the discharge procedures above. Again, make sure you test from "C" (common) to "F." (Fan) and "C" (common) to "HERM" (compressor). Always replace with the same microfarad rating. Once discharged the microfarads should be with in 10% of the raiting on the cap. Normaly a bad cap will be swelled up or have burnt terminals on it.

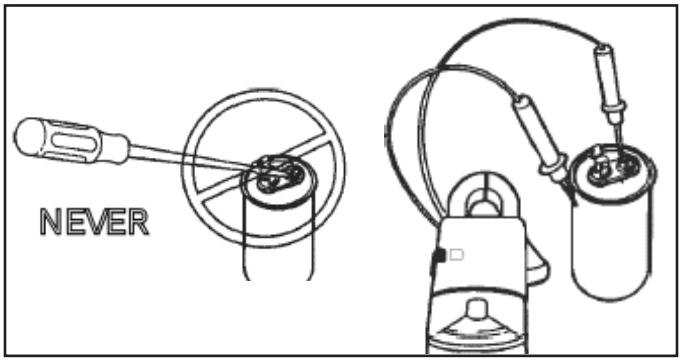

4.14.2 Start Capacitor

The start capacitor should be checked with a capacitor tester for proper microfarads. In the past, it has been recommended to discharge capacitors using a VOM, however modern VOM's have a high impedance that makes this process ineffective. To maintain a safe working environment and protect ourselves from shock, service technicians should use a capacitor discharge tool to remove the electrical current. Once discharged the microfarads should be with in 10% of the raiting on the cap. Normaly a bad cap will be swelled up or have burnt terminals on it.

4.15 Blower Motor

⚠ WARNING

This is an energized circuit. Shock can occur if not tested properly. Testing is to be done by a qualified service technician.

To determine if a motor is good, test the windings with an ohmmeter. Disconnect the power supply, and turn all the switches to the "OFF" position. Disconnect the motor leads (on some models disconnect the 6 pin plug from the electrical box). The motor should show continuity between all leads and the white wire. Infinity or no continuity indicates the winding is open and the motor is defective.

Check for continuity between the motor frame and each lead. If a continuity reading is present to any lead, the motor is shorted and defective.

The motor can be tested with an ammeter to determine if the operation is within the rating (±10%) listed on the model plate. Many times the motor windings will check good, but bad bearings or capacitor may be found in an ampere test.

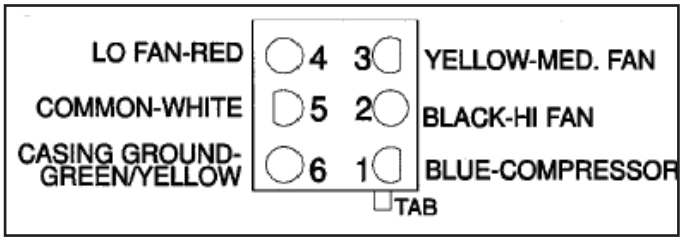

On Models 620XXX.XXX, 641XXX.XXX, 651XXX.XXX, 6300XX.XXX and 6305XX.XXX, the motor leads do not go into a 6 pin connector. On these units, disconnect the wires from the AC power module and do the previous tests between the motor leads.

4.16 Compressor

⚠ WARNING

This is an energized circuit. Shock can occur if not tested properly. Testing is to be done by a qualified service technician.

Be sure to disconnect all power and turn all switches to the "OFF" position, before starting to do the tests. Remove the terminal cover from the compressor to the three leads connected to the terminals. Make note of the positions so the wires can be replaced correctly. Scrape the compressor casing to bare metal and check continuity from each terminal to the casing. If continuity is found to the casing on any of the terminals, the compressor is shorted and it is defective. Continuity should exist between all three terminals of the compressor. If there is no continuity the compressor windings are open and the compressor is defective.

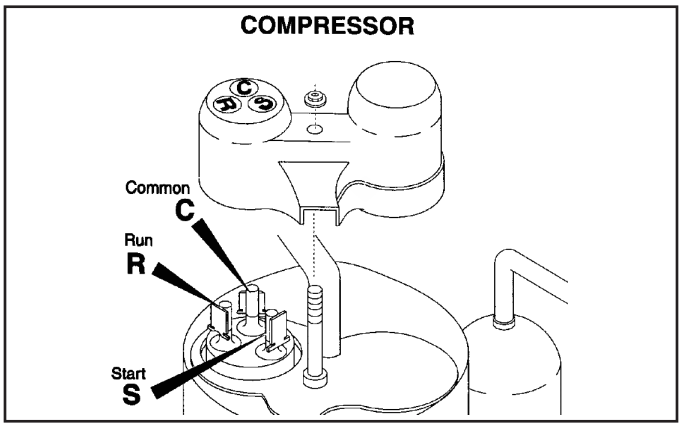

Use an ohmmeter to check for continuity through the overload device. If no continuity is found and the compressor is hot, allow 15 to 20 minutes for the compressor to cool. If a repeat of the test shows the overload to be open, it is defective and requires replacement. Note on some 15,000 BTU units the overload may be an internal component and non replaceable.

4.17 Heat Strips

⚠ WARNING

This is an energized circuit. Shock can occur if not tested properly. Testing is to be done by a qualified service technician.

The heater is an optional/standard component depending on model number of AC. To diagnose the heat strip, turn the air conditioner circuit breaker OFF. Unplug the heater and take an ohm reading across the two wiring terminals. You should have an ohm reading of 9.5 ohms ±10%. if the ohm reading is outside of these parameters, replace the heater. To check the heater limit switch, check for continuity across the limit switch terminals with the limit switch at ambient temperature. If you have an open limit switch, replace it. Also make sure the heater plug is properly connected. The temperature rise across the heat strip should be 5° to 7° degrees. If the temperature in the coach is 50 degrees the temp coming out of the unit will be approximately 55° to 57°. On the hand this will feel cool and the user may not think the unit is working.

⚠ WARNING

This is an energized circuit. Shock can occur if not tested properly. Testing is to be done by a qualified service technician.

4.17.1 Ducted Heat Strip

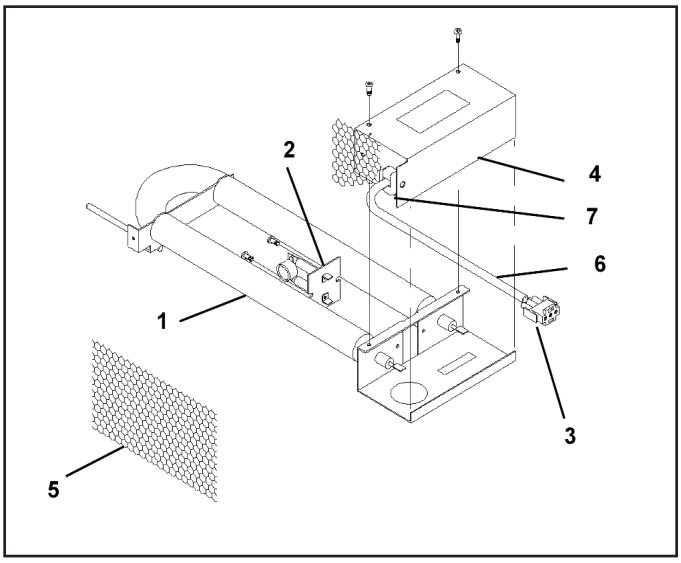

1 Element, heat
2 Switch, auto limit
3 Plug, (3-Pole)
4 Cover, heater terminals
5 Guard, heat element
6 Sleeving, wire
7 Strain, relief

4.17.2 Air Box Heat strip

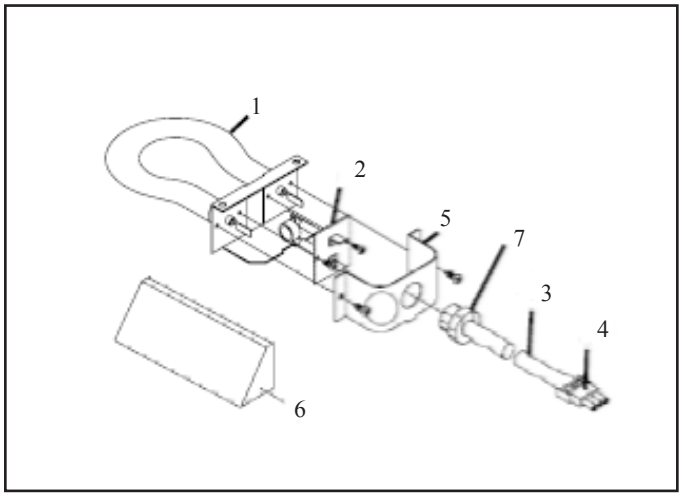

1 Element, heat
2 Switch, auto limit
3 Sleeving, fiberglass
4 Plug, (3-Pole) Cover, heater terminals
5 Electric box
6 Guard, heat
7 Strain, relief

4.18 Thermistor Temperature Sensors

The Digital control systems uses four types of remote temperature sensors.

1. Remote room sensor used when multiple zones are used on the Comfort Control and the CCC2.
2. Cold (FREEZE) Control sensor used to stop the inside coil from freezing used on the Comfort control , CCC2 and the Single Zone LCD control.
3. Ambient sensor Comfort Control only used on Heat Pumps to tell the control system it is a heat pump and communicate the outside tempera ture.
4. Ambient sensor CCC2 and Single Zone LCD control used on Heat Pumps to communicate the outside temperature.

Note: On all thermistor type sensors when testing it is imperative to check each wire to chassis ground. If one of the two wires has gone to ground, the micro processor will read a different ohms reading and the temperature range sensed will be erratic.

4.18.1 Remote Temperature Sensor

White Two Pin Plug Comfort Control & CCC2

The remote sensor is the temperature sensor that allows the unit for a zone to cycle "ON" and "OFF" by temperature set point. A remote sensor can be used for each unit or zone. A remote sensor is usually optional for zone 1; but, in some applications the Comfort Control Center is located for convenience of access and the remote sensor placed for temperature control. The proper location of the remote sensor is very important to maintain a comfortable temperature in the RV, (reference T-stat location bulletin A22-7B) . Unplug the remote sensor and test its cable with an ohmmeter. The ohm reading should be as follows:

TEMPERATURE	OHM READING
25° F. / -3.8°C	27271
30° F. / -1.1°C	23528
35° F. / 1.7°C	20348
40° F. / 4.5°C	17642
45° F. / 4.2°C	15334
50° F. / 10°C	13360
55° F. / 12.8°C	11667
60° F. / 15.5°C	10212
65° F. / 18.3°C	8959
70° F. / 21.1°C	7876
75° F. / 23.9°C	6939
80° F. / 26.7°C	6126
85° F. / 29.5°C	5418
90° F. / 32.2°C	4802
95° F. / 35°C	4264
100° F./37.7°C	3793

4.18.2 Cold (Freeze) Control

Blue Two Pin Plug

The cold (freeze) control is used on both air conditioners and heat pumps. When the temperature of the coil reaches the freezing point the compressor will stop operation and the fan will automatically go to high speed. The cold control is a thermistor and senses the coil temperature. Unplug the sensor (blue plug) from the AC power module board. Using an ohmmeter, check the ohms through the freeze sensor on the wire side of the plug. When checking the sensor also go from each wire at 2 pin plug to chassis ground. If one of the wires is partially grounded it will give the control board a false reading. Check the ohms through the sensor and compare it to the chart below. Any variation requires the sensor to be replaced.

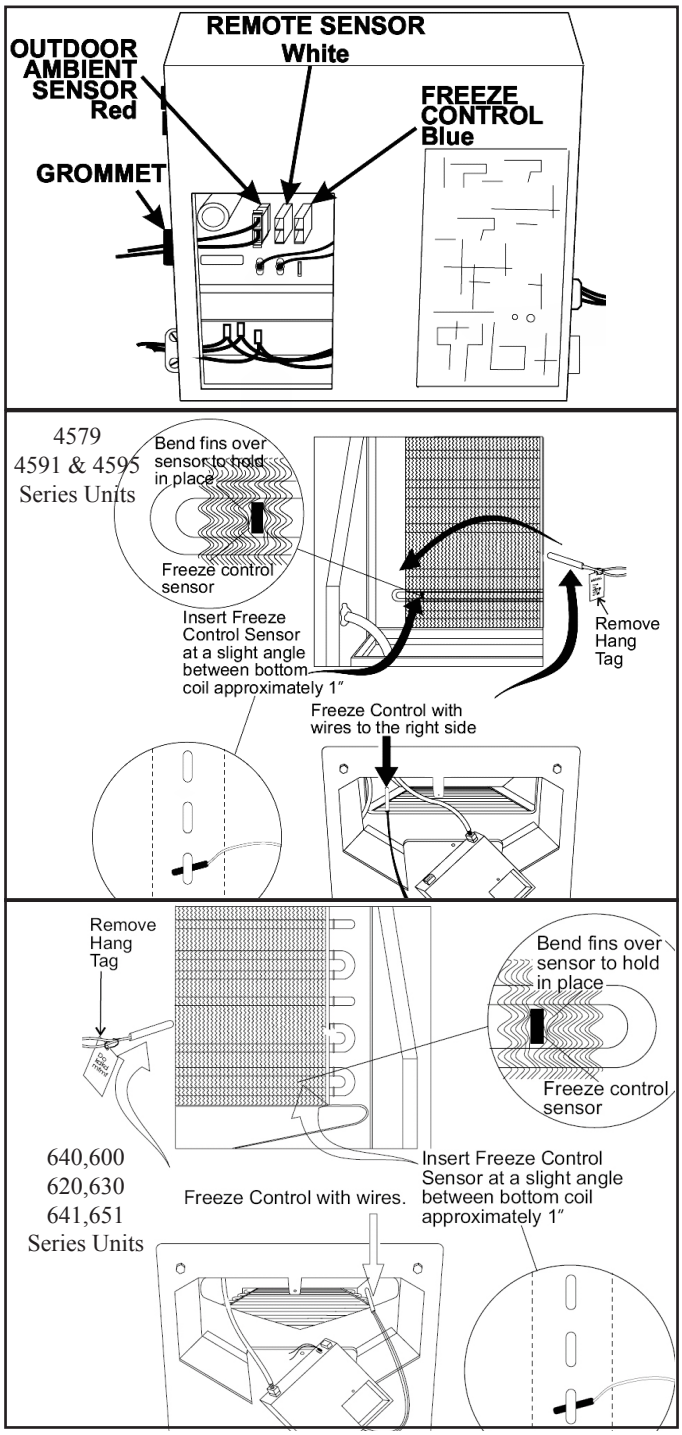

4.18.3 Ambient Sensor

Red Two Pin Plug Comfort Control only

The ambient sensor is the outside air temperature sensor and used on Comfort Control heat pumps only. This device allows the heat pump to operate down to approximately 32° F. To check the ambient sensor, first measure the outside temperature near the sensor. Unplug the sensor (red plug) from the AC power module board. Using an ohmmeter, check the ohms through the ambient sensor on the wire side of the plug. The temperature reading taken near the ambient sensor should correspond to the readings on the chart for Remote and cold control. When checking the sensor also go from each wire at 2 pin plug to chassis ground. If one of the wires is partially grounded it will give the control board a false reading.

White Two Pin Plug CCC2 & Single Zone LCD

The ambient sensor is the outside air temperature sensor and used on heat pumps only. This device allows the heat pump to operate down to approximately 32° F. To check the ambient sensor, first measure the outside temperature near the sensor. Unplug the sensor (white plug) from the AC power module board. Using an ohmmeter, check the ohms through the ambient sensor on the wire side of the plug. The temperature reading taken near the ambient sensor should correspond to the readings on the chart below. When checking the sensor go from each wire at 2 pin plug to chassis ground. If one of the wires is partially grounded it will give the control board a false reading.

TEMPERATURE	OHM READING
14°F / -10°C	43,670
23°F / -5°C	34,630
32°F / 0°C	27,700
40°F / 4°C	23,270
50°F / 10°C	18,070
60°F / 16°C	14,160
70°F / 21°C	11,650
80°F / 27°C	9,275
90°F / 32°C	7,715
100°F / 38°C	6,229

4.19 Analog Cold Control

The cold (freeze) control is used on roof top air conditioners ONLY. If used with roof top heat pumps it can cause premature shut off of the compressor. The cold control is normally open (no continuity), and closed when the temperature is below 45° F. The switch will return to the open position at 65° F. Check continuity through the switch, in temperatures over 65° F. it should be open (no continuity) and in temperatures below 45° F. it will be closed. Any variation requires the switch to be replaced. There is a +/- of 4° degrees on the

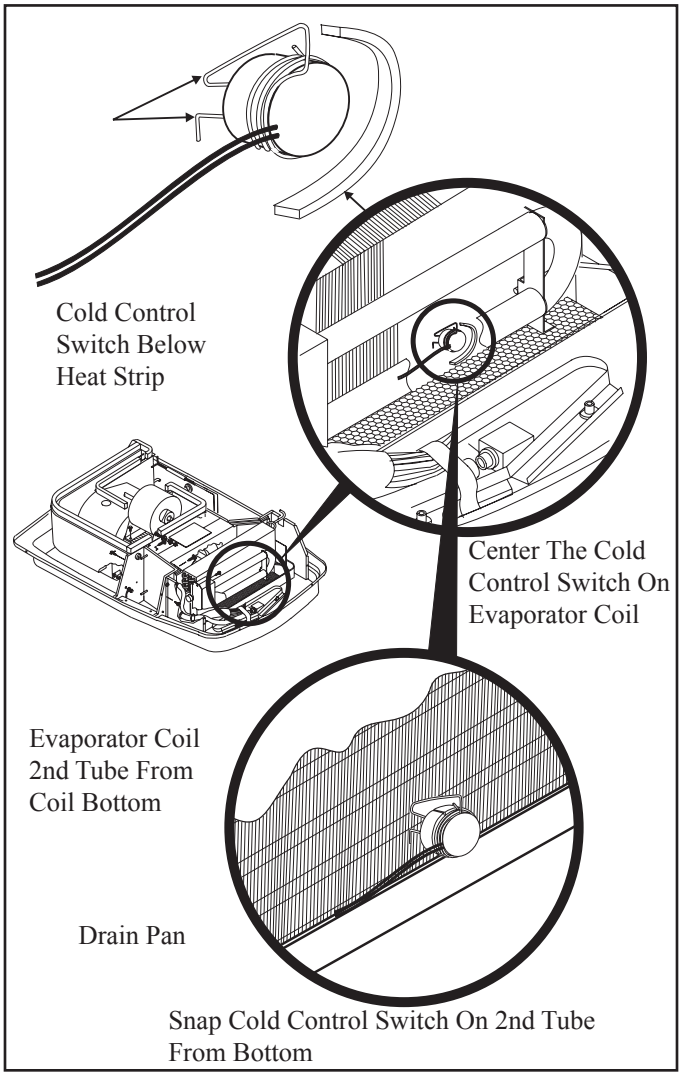

4.20 Reversing Valve Heat Pump

The reversing valve is the heart of a heat pump. It changes the direction of the refrigerant flow through the coils, and changes the system from cooling to heating. Duo-Therm roof top heat pumps have the solenoid energized in the cool mode on early units and energized in the heat mode on units controled with the CCC2 and Single Zone LCD t-stats. One method of checking the reversing valve is to feel the refrigerant line at the top of the inside coil. In the COOL mode, this line will be cool to the touch. In the heat mode the line will be warm or hot to the touch. If you do not feel a cold line in the cooling mode, the direction of flow is not correct. Check the solenoid coil for ohms continuity. An open circuit (no continuity) shows the solenoid is defective and must be replaced. The ohms resistance of the reversing valve solenoid coil is approximately 465 ohms (Coil With Two Pin Connector) or 265 ohms (Coil With Wires Attached) plus or minus (±) 10%. If ohm reading is within this range, the solenoid coil is good. If an ohm reading is outside this range, replace the solenoid coil. If the coil test OK and there is voltage at the reversing valve, but the unit is not switching from AC to HEAT, the reversing valve is stuck.

SECTION 5
Air Flow

5.1 User Maintenance And Operation

The air conditioner can be installed flawlessly, but if the user does not maintain it properly, freeze-up can still occur. Simply not cleaning air filters on a regular schedule can cause a blockage of return air. This will lower the coil temperature and freeze-up will result. Filters should be cleaned approximately every one hundred hours or sooner. This will depend upon climate, area, pets, etc. Another way the user can cause freeze-up is by closing registers to prevent cold air discharge. This will restrict air flow in the same manor as a dirty filter.

5.2 Frost On Coil

The formation of a light coat of frost is possible on a properly operating air conditioner, just prior to the cold (freeze) control shutting off the compressor. This is normal when the cold control function is correct; however, this may be an indication that the unit (1) is installed improperly, (2) maintained or operated improperly by the user, or (3) has a mechanical problem. The first two items listed above are the most frequent causes of frost formation, and they are NOT covered under the Dometic Warranty policy. Anything that restricts air flow will cause more frost on the coil.

5.3 Recirculation, Obstructions, Restrictions

The 14-1/4″ x 14-1/4″ (±1/8″) opening must be framed to seal off the roof cavity. Holes used to route electrical wiring must be sealed. The 14-1/4″ x 14-1/4″ (±1/8″) opening is part of the return air duct and must be finished in accordance with NFPA standard 501C, Standard for Recreational Vehicles, Section 2-7. Reference Bulletin A20-6B

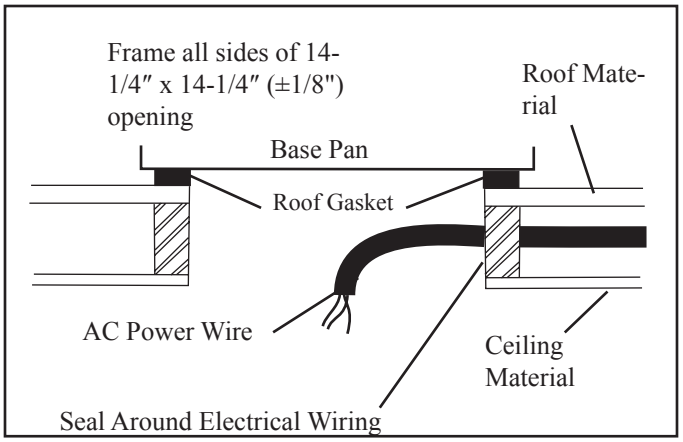

The most commonly found installation problem is the improper sealing of the 14-1/4″ x 14-1/4″ (±1/8″) opening in the roof cavity. The cooled discharge and warm return air are mixed in the roof cavity and produce conditions that are excellent for frost production.

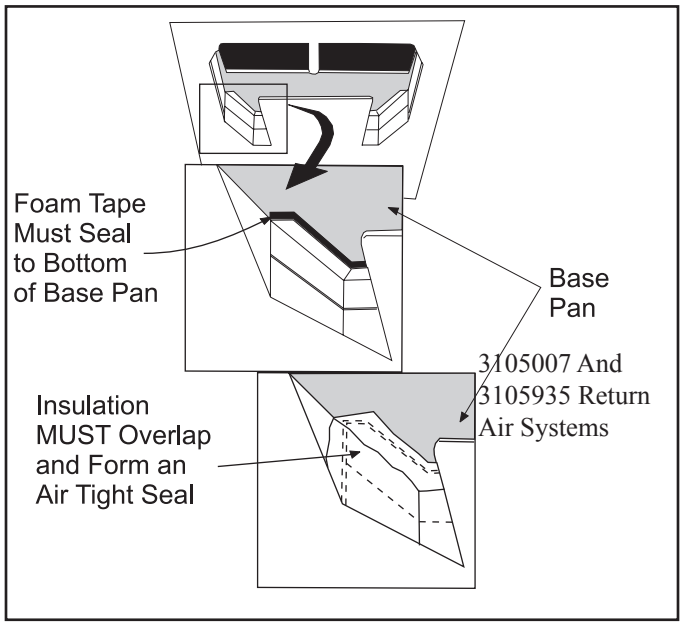

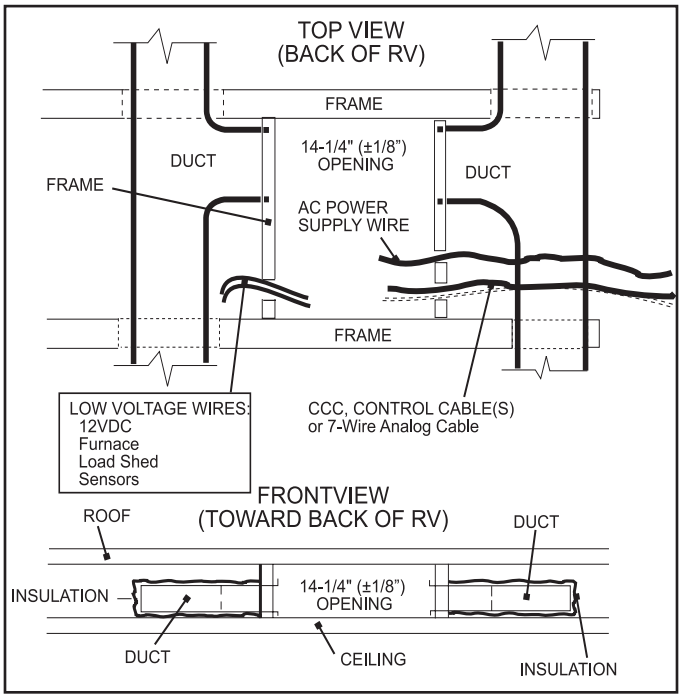

The best framing job is not going to stop frost from occurring if the cold air discharge is allowed to enter into the return air portion of the 14-1/4″ x 14-1/4″ (±1/8″) opening. Duo-Therm's return air kits are designed to be installed tightly to the bottom of the base pan and ceiling template. Insulation supplied in the kit not only stops condensation from forming on the divider plate, but prohibits air leaking around it as well. The insulation is purposely oversized to be attached to the sides of the 14-1/4″ x 14-1/4″ (1/8″) opening, the base of the air conditioner and ceiling template. Make sure the data plate does not get covered with insulation.

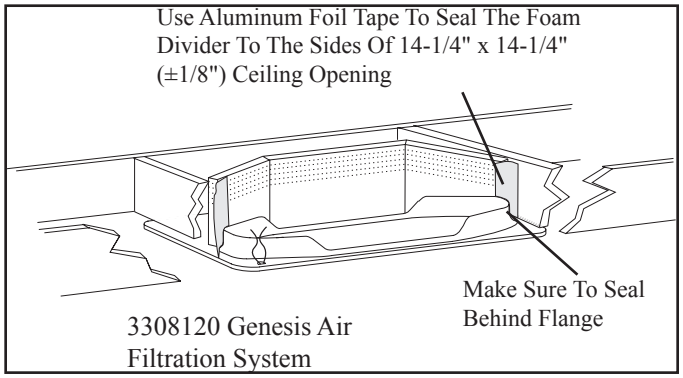

In some installations, the OEM supplies their own return air kits. In some cases, both the return and the discharge air are ducted to and from the 14-1/4″ x 14-1/4″ (±1/8″) opening. The bottom of the 14-1/4″ x 14-1/4″ (±1/8″) opening can be covered with ceiling material. In this type of installation the 14-1/4″ x 14-1/4″ (±1/8″) opening is divided in half. The divider must completely seal between the base of the unit and ceiling material. A gasket, etc., must be used to fill up the open space to reduce recirculation.

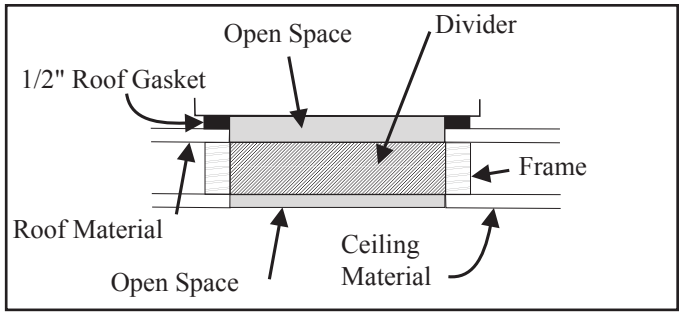

Another method of connecting the discharge air to the coach's main duct uses Duo-Therm's return air kits. One-half of the 14-1/4″ x 14-1/4″ (±1/8″) opening is discharge plenum and one-half is return air plenum. If the duct openings are not clean, restriction of air can cause the coil to freeze. The opening of the duct should be as large as possible to make the air distribution better in the coach and reduce freeze-up.

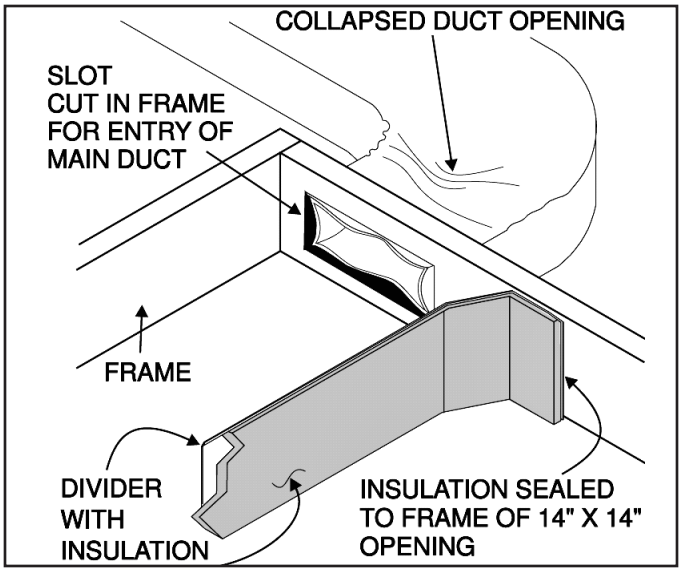

The final method of installation dumps the discharge air directly into the RV's main duct. The duct is routed through the 14-1/4″ x 14-1/4″ (±1/8″) opening. A duct adapter is used to connect the air conditioner to the main duct. If this connection is not made properly, cold air can migrate back into the return air path and make conditions right for freeze-up. Be sure the duct adapter is sealed to the main duct and air conditioner.

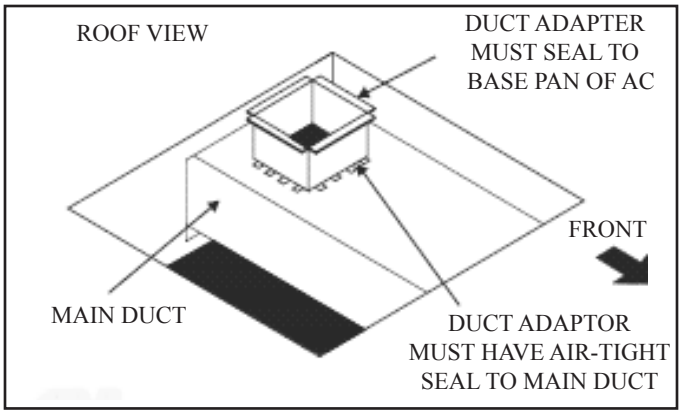

Restrictions at the connection to the air conditioner is the most common, but blockage in the main duct runs can also cause freeze-up. Blockages commonly occur in the areas where the duct changes direction. Other obstacles that can cause a change in the duct (air) path include rafters, vent pipes, wire bundles, etc.

A good way to check for duct blockage is with a flashlight and a mirror. Remove ceiling register cover to allow a flashlight to be put in the duct and use a mirror to view the flashlight from the next register opening. A blockage will be visible in the mirror. Duo-Therm has available return air kits that will allow the cooled air to be discharged directly out of the air conditioner. This will bypass any restrictions in the coach duct system. (3105935 Quick Cool and, 3308120 Genesis Air Filtration System available in Shell or Polar White colors.) If the main duct in the vehicle is undersized, the volume of air flowing through the ducts will decrease. The coil temperature will also drop because not enough air is moving through it. The requirements for proper duct size are shown . This will cause coil freeze-up.

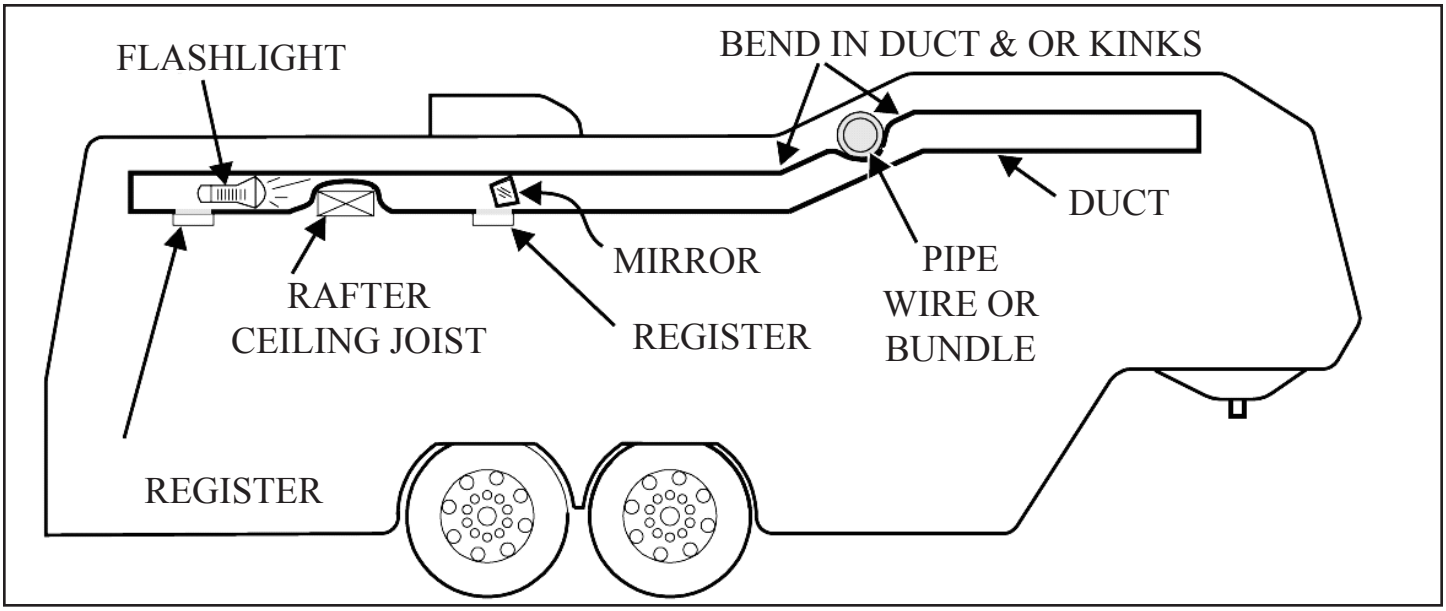

DUCT SIZE & REQUIREMENTS FOR 310500 & 3105935 RETURN AIR COVER

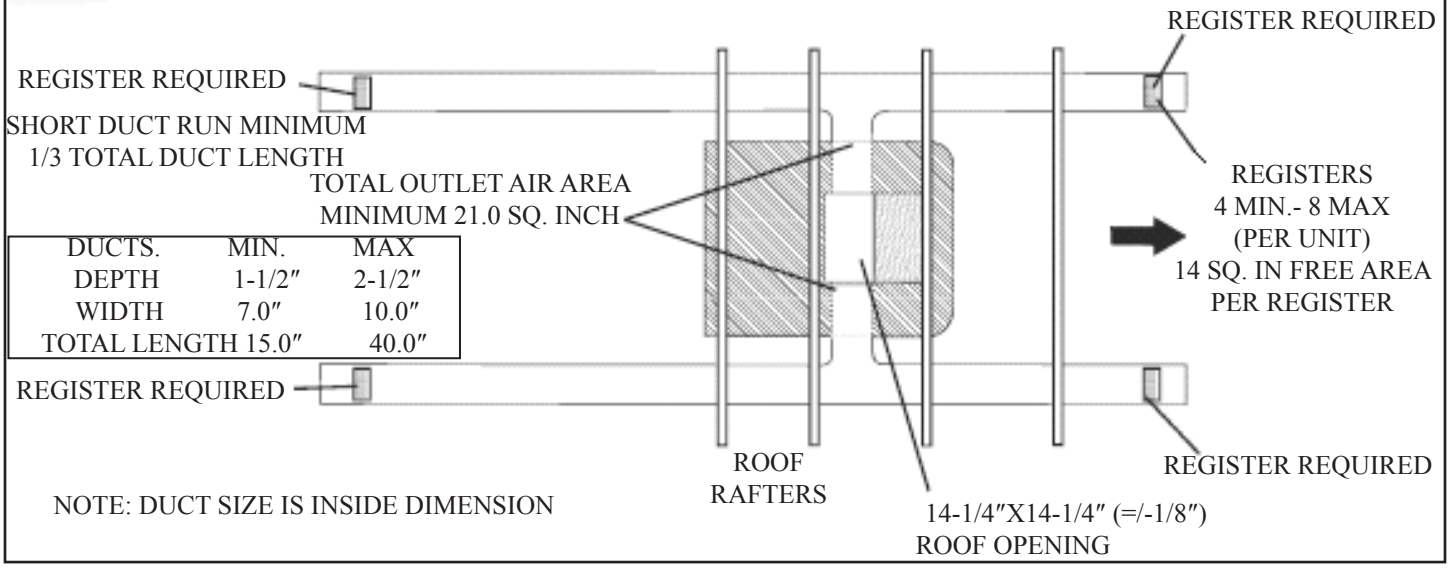

DUCTS.	MIN.	MAX
DEPTH	1-1/2″	2-1/2″
WIDTH	7.0″	10.0″
TOTAL LENGTH	15.0″	40.0″

NOTE: DUCT SIZE IS INSIDE DIMENSION

DUCT SIZE & REQUIREMENTS FOR 3308120.XXX GENESIS AIR FILTRATION SYSTEM KIT

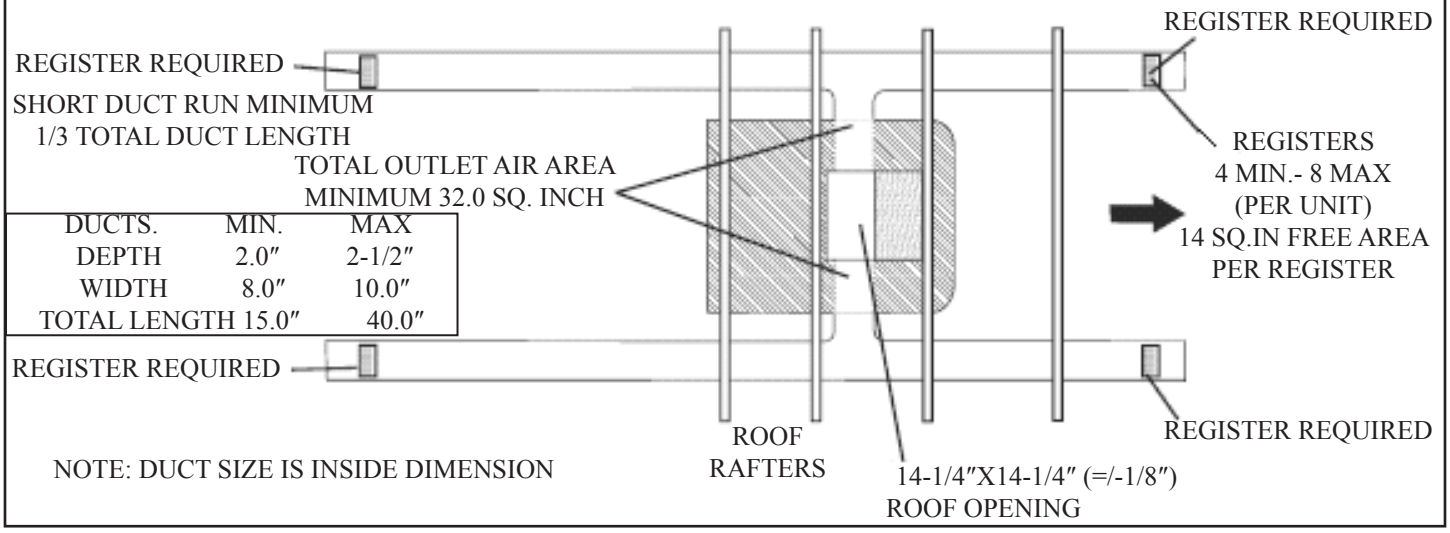

DUCTS.	MIN.	MAX
DEPTH	2.0″	2-1/2″
WIDTH	8.0″	10.0″
TOTAL LENGTH	15.0″	40.0″

NOTE: DUCT SIZE IS INSIDE DIMENSION

Up to this point we have mainly covered the discharge side; however, restrictions of the return air can result in frost build-up. The Duo-Therm air conditioner requires a minimum of 40 square inches of FREE AREA. The FREE AREA – is the opening that remains in a grill or louvered panel after the restrictions are taken away. For example, an opening of 10 x 20 inches has 200 square inches. When this opening is covered with a grill that is 67 percent open, the FREE AREA is (200 x 0.67), 134 square inches. Dometic return air kits are designed to have the correct free area; however, some manufacturers use their own grills. If a manufacturer's grill is used, it must use the above formula to make sure the return air is sufficient to reduce the chances for freeze-up. The filter material must also be considered as a restriction and subtracted from the FREE AREA.

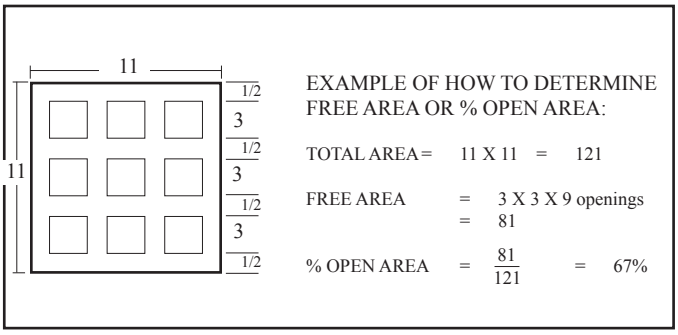

Main ducts running through the 14-1/4″ x 14-1/4″ (±1/8″) opening must leave space between the duct and return air grill or duct and bottom of the air conditioner. The gap between the top of the main duct to the bottom of the air conditioner should be a minimum of 1-1/2″. If the return air is ducted into the 14-1/4″ x 1/4″ (±1/8″) opening, the system must equal the 40 sq. inches of free air required by the air conditioner. Grills or registers used in this duct must be equal to or greater than the duct in square inches.

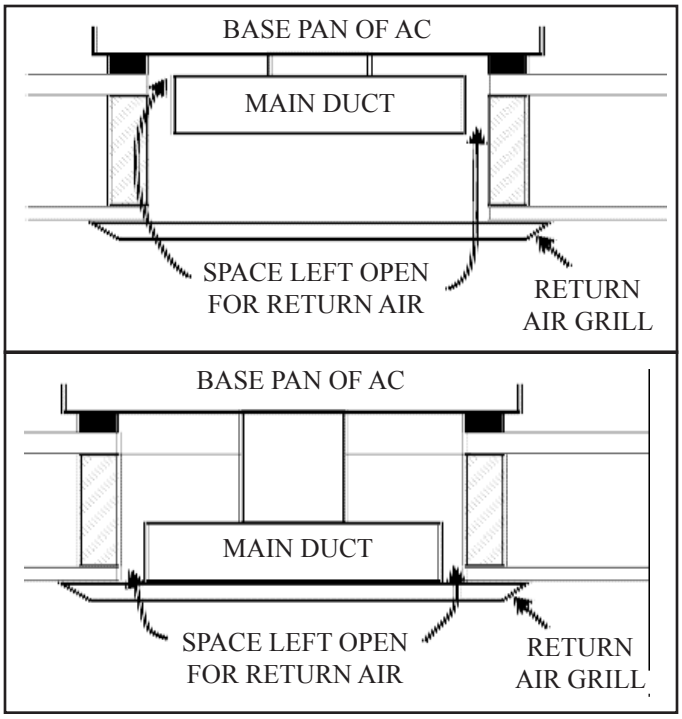

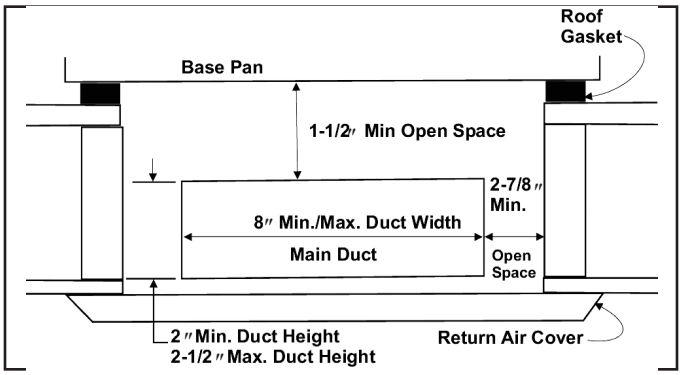

5.4 Air Distribution Box (ADB)

Improperly installed, the air box can be a source of cooling problems. The air box must be sealed to the ceiling template to prevent the mixing of discharge and return air. Cold discharge air that enters into the return air portion of the air box can cause a false temperature reading at the thermostat and shut down the compressor. This will cause short cycling and or frost formation on the inside coil. In some instances, the ceiling template is bent when the anchor bolts are over tightened, causing gaps between the air box and the ceiling template. These gaps can be sealed with aluminum tape or a closed cell foam weather strip. The duct connecting the air conditioner or heat pump must be air tight. Use aluminum tape to seal the joints. The thermostat sensing bulb must be properly located to control temperature. If the sensing bulb is left curled against the side of the electric box or used as a ground connection, improper operation will occur. Relocate the sensing bulb in its proper place as indicated in the Installation and Operating Instructions. Make sure you have the correct discharge duct for the thickness of the roof. Make sure the discharge louvers are not restricted and filter clean.

Section 6

Configuration Comfort Control

⚠ WARNING

This is an energized circuit. Shock can occur if not tested properly. Testing is to be done by a qualified service technician.

The Comfort Control Center configuration relates to setting the Dip switches and particular components (remote temperature sensor, cold [freeze] control and ambient sensor) that can be plugged into the AC power module board according to the type of unit and accessories included.

Note: If the configuration of the Dip switches and plug-in components are not correct, the air conditioner or heat pump could operate erratically or not operate at all. Configuration should be done at the time of installation by the installer. To check the configuration, first locate the Electronic Control Kit or main power module on roof-mounted units. Next remove any cover or covers for access to Dip switches and Sensor Plugs (P3, P4 and P5). Both are located on the AC Power Module Board. All Dip switches are in the "OFF" position at the time of manufacture of the appliance.

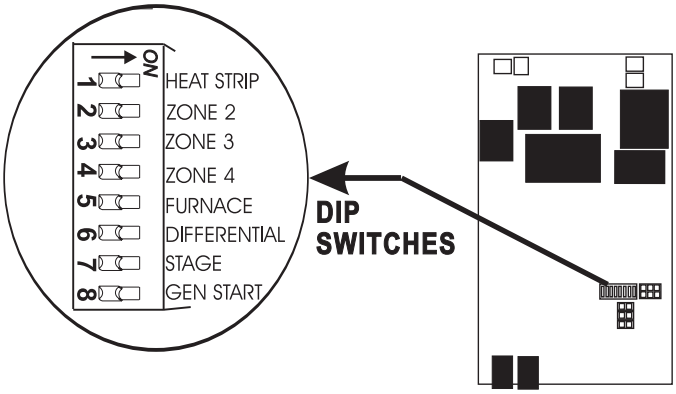

The Comfort Control Systems can operate up to 4 units on one Comfort Control Center (thermostat) provided the configuration is correct. The configuration for zone 1 is all dip switches "OFF". All units require the cold control to be plugged into the blue P5 connector on the board and the sensor is inserted in the evaporator coil. If a remote sensor is used for that zone it will be plugged into the white P4 connector. The control box or power module is connected to the Comfort Control Center (wall thermostat) by a telephone type cable. If more than one unit is to be operated off the Comfort Control Center, a second telephone type cable is needed. Both telephone cables are plugged into the control box or power module for the first unit. The second cable is routed to the control box or power module for the second unit. The dip switch for zone 2 needs to be turned on. Each additional zone (up to four total zones) requires only the dip switch for its zone number to be turned on.

If an Electric Heat Strip is to be operated by the Comfort Control Center, it is plugged into the control box and the heat strip dip switch is turned to "ON". If a second unit is equipped with a heat strip, the dip switch for the heat strip is turned on along with zone 2 dip switch. If a furnace is operated by the Comfort Control Center, the thermostat wires are attached to the two (2) blue wires from the control box. The furnace dip switch for that zone (control box or power module) is turned on. If the unit is a heat pump, the ambient sensor for the outdoor temperature is plugged into the red P3 connection. If more than one unit is used, the zone dip switch must be turned on.

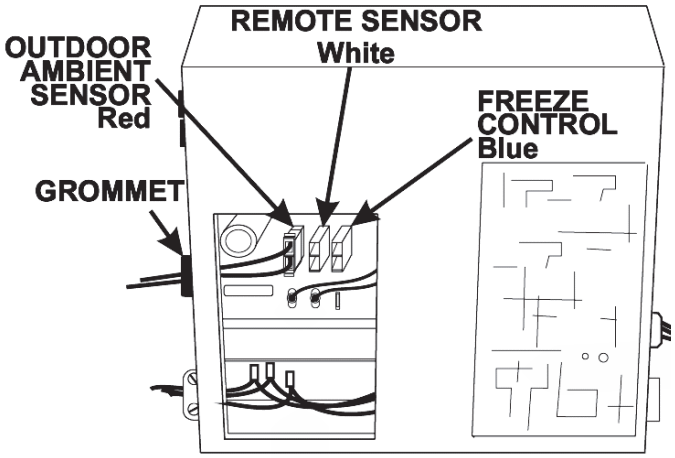

Configuration CCC 2

The CCC 2 configuration relates to setting the Dip switches and particular components (remote temperature sensor, cold [freeze] control and ambient sensor) that can be plugged into the AC power module board according to the type of unit and accessories included.

Note: If the configuration of the Dip switches and plug-in components are not correct, the air conditioner or heat pump could operate erratically or not operate at all(E1). Configuration should be done at the time of installation by the installer. To check the configuration, first locate the Electronic Control Kit or main power module on roof-mounted units. Next remove any cover or covers for access to Dip switches and Sensor Plugs (P3, P4 and P5). Both are located on the AC Power Module Board. All Dip switches are in the "OFF" position at the time of manufacture of the appliance.

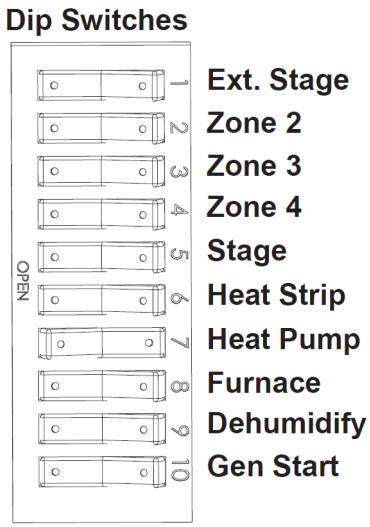

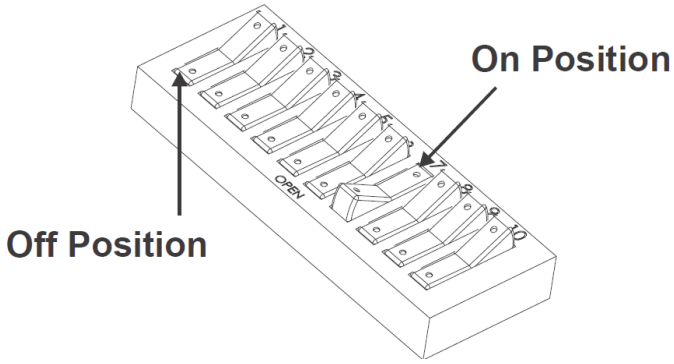

The CCC 2 can operate up to 4 zones with 2 units in each zone on one CCC (thermostat) provided the configuration is correct. The configuration for zone 1 is all dip switches "OFF". All units require the cold control to be plugged into the blue P5 connector on the board and the sensor is inserted in the evaporator coil. If a remote sensor is used for that zone it will be plugged into the white P4 connector. The control box or power module is connected to the CCC 2 (wall thermostat) by a telephone type cable.

If more than one unit is to be operated off the CCC 2, a second telephone type cable is needed. Both telephone cables are plugged into the control box or power module for the first unit P1 & P2. The second cable is routed to the control box or power module for the second unit. The dip switch for zone 2 needs to be turned on. Each additional zone (up to four total zones) requires only the dip switch for its zone number to be turned on and the communication harness plugged in. If an Electric Heat Strip is to be operated by the CCC 2, it is plugged into the control box and the heat strip dip switch is turned to "ON". If a second unit is equipped with a heat strip, the dip switch for the heat strip is turned on along with zone 2 dip switch. If a furnace is operated by the CCC 2, the thermostat wires from the furnace are attached to the two (2) blue wires from the control box. The furnace dip switch for that zone (control box or power module) is turned on. If the unit is a heat pump, the heat pump dip switch is turned on and the ambient sensor for the outdoor temperature is plugged into the white P3 connection. If more than one unit is used, the zone dip switch must be turned on.

Dip Switch Setting
1.Ext. Stage used to control second unit in any zone
2.3. &4. Zone 2,3 and 4 Each Comfort Control Center thermostat can have up to 4 zones. When only one unit is installed it becomes Zone 1 and no dip switch setting is required. Each dditional unit must be assigned a zone (2 through 4). Each unit must have a different zone setting.
5.Stage used on duel compressor basement units.
6. Heat Strip, it unit has a Heat Strip turn on.
7. Heat Pump, If unit is a Heat Pump turn on.
8. Furnace, If unit is controling a Furnace/Aqua turn on.
9. Dehumidify no longer used
10. Gen start. If the unit has aux gen start turn on to start gen when AC calls for cooling.

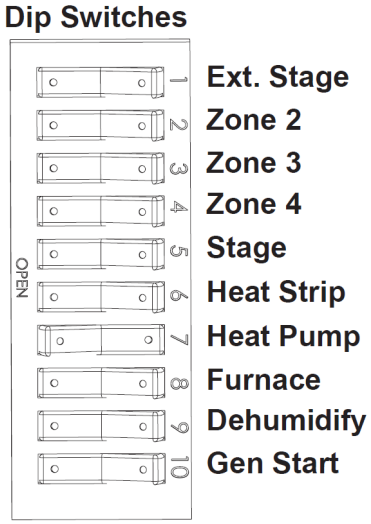

SECTION 7
Proper Thermostat Location

THE THERMOSTAT LOCATION IS VERY IMPORTANT FOR BALANCED TEMPERATURE CONTROL IN A RV.

Today's interior design of the RV has become both cosmetically more appealing and more efficient in its use of storage space. These improvements have generated complex interior space requirements which, in turn, have caused many RV's to become a maze for heating and air conditioning circulation. The heating system is usually mounted close to floor level and consists of one or more furnaces. The air conditioner (s) is mounted on the roof with a different air distribution system. It is very important to locate the thermostat and remote sensors in areas that have good air movement. This may be difficult because what works well for heating may not work well for air conditioning. The thermostat or remote sensors must be placed in a location with good air movement. Placing a thermostat or sensor under a cabinet or in a corner will result in a large fluctuation in the temperature.

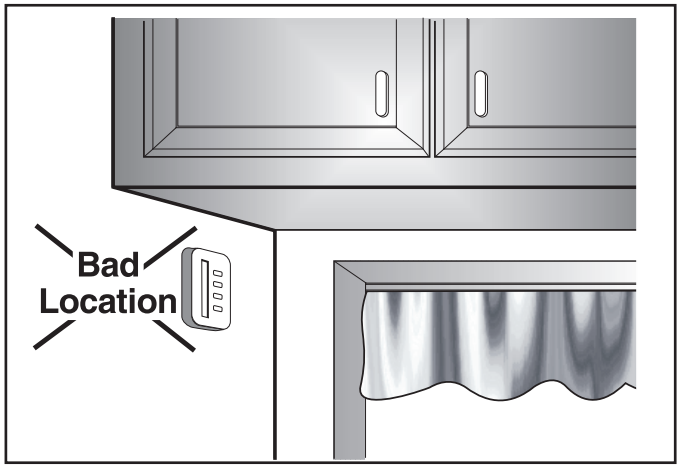

Examples of Bad Thermostat Locations

1, 3, 4 Near Heat Sources
2 Near Drafts or Heat source
5, 6Near Drafts
7 On an Outside Wall

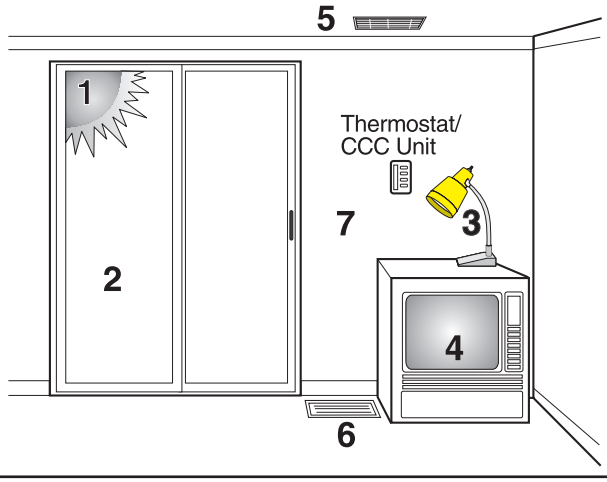

The proper location for the thermostat or remote sensor is 54″ from the floor and on an inside wall. It should be located where it cannot be affected by heat from the sun, lamps, ovens, etc., or other sources of draft. Locations close to entry doors and windows should be avoided. The discharge from registers blowing directly on the thermostat or remote sensor can cause the systems to short-cycle and should be avoided.

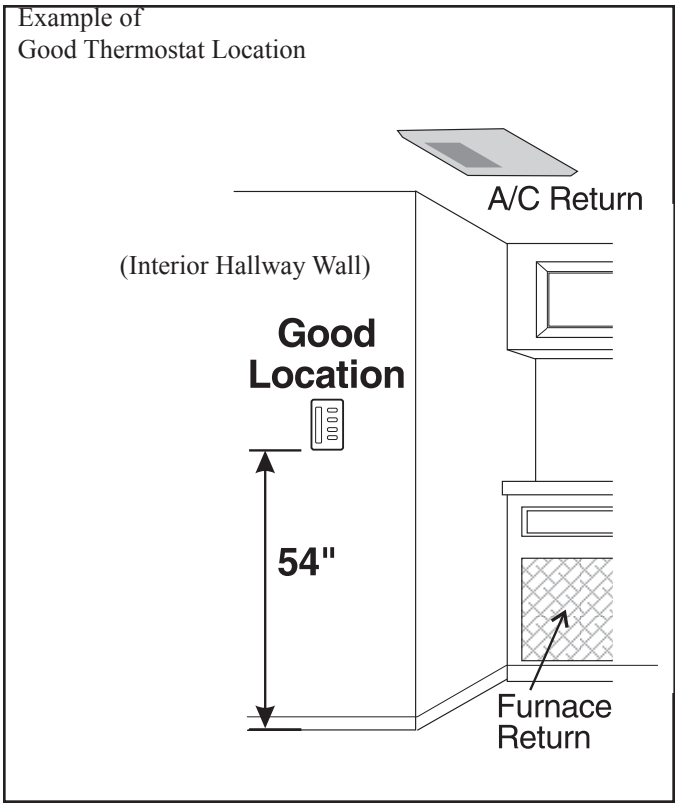

Section 8
Other
8.1 Ambient Temperature

Running the air conditioner or heat pump in the air condition mode at a temperature below 75° degrees Fahrenheit may cause the inside coil (evaporator) to freeze up in the cooling mode. The most common time for this to occur is at night. Even after the ambient temperature has gone up, the coils will remain frozen. To assist the defrosting of the coil, turn the air conditioner to HI FAN mode; set the temperature selector to a higher (warmer) setting and let the air conditioner or heat pump fan run until the coils are defrosted. Temperatures below 32° F. (Comfort Control Center system) or 40° F. (mechanical changeover thermostat) will turn off the operation of the heat pump system. It is recommended the auxiliary heat (furnace) be used if the temperatures are subject to dropping below this outdoor temperature. Running of the heat pump in ambient temperature above 70° F. will cause the system amperage to increase. Popping of circuit breakers or compressor cycling on overload would be common.

8.2 Heat Gain

Heat gain can be caused by several factors; A hot, humid and sunny day; a large number of people in the coach; frequent opening of the door; excessive showering and cooking etc. Other factors to be taken into consideration as possible heat gain causes are the size of the air conditioner relative to the size of the coach; the “R” factor of insulation; and the size and placement of window. Starting the air conditioner early in the morning and giving it a “head start” on the expected high outdoor ambient will greatly improve its ability to maintain the desired indoor temperature. For a more permanent solution to a high heat gain, accessories like A&E outdoor patio and window awnings will reduce heat gain by removing the direct exposure to the sun. They also add a nice area to enjoy company during the cool of the evening. The manufacturer of the RV should be consulted for recommendations.

8.3 Blower Wheel or Fan Noise

The blower motor will have either a squirrel-cage or blade type fan attached for moving the air. Turn the air conditioner circuit breaker to OFF. Check and adjust the component to make sure it is not rubbing against the bulkhead. If it is a blade-type fan, the blades should be half through the opening for proper operation. Check mounting bracket on motor and base pan to bracket for bending, tweak as needed. Replace the blade fan or squirrel-cage if necessary.

8.4 Water Leakage

When troubleshooting a water leakage condition on an air conditioner, it is important to know what conditions exist when the leakage occurs. Does the leakage occur only when the air conditioner is running, when fan cycles off, only when it rains, or only during very high humidity conditions? Once these conditions are known, the actual problem can be determined.

Leakage occurs only when air conditioner is running. This is the most common type of complaint for a leakage problem. All of these complaints are due to condensate water not draining properly from the roof after it has left the air conditioner, or condensate water not draining properly from the air conditioner. The unit must be installed on a roof which allows water to drain away. Check the roof around the unit to make sure water will drain away properly. If in doubt, stretch a string across the top of the RV. If the string shows a low spot in the area of the unit, this must be corrected. Check mounting gasket for any damage such as torn, compressed or trapped material under the gasket (i.e. screws, wood chips, metal shavings) which could allow water to seep inside. If any of the above conditions are found, install a new 14″ x 14″ gasket. When attaching the unit to the roof, tighten the mounting bolts only enough to compress the mounting gasket to 1/2 inch (40 inch pounds of torque). DO NOT OVER-TIGHTEN the mounting bolts as you may damage the unit base. Once the unit has been installed, the mounting gasket will retain its installed thickness. If the unit is removed for inspection or service, avoid a future problem by installing a new 14″ x 14″ gasket when you reinstall the unit. Seven styrofoam blocks have been placed on the underside of the base pan. The styrofoam blocks provide an even support for the base pan which prevents it from bending and warping during installation.

Over-tightening of the mounting bolts can cause the styrofoam blocks to act as a wedge and force the edges of the base upward. The rolling and bending of the base pan caused by over tightening of the mounting bolts may let the plastic drain pan pull away from the sealant. Water can flow through the gap between the plastic drain pan and sealant. The water becomes trapped under the plastic drain pan and can enter the interior of the RV through screw holes, etc. It may be possible to remove the unit and straighten the base pan; however, if the plastic drain pan has pulled away from the sealant it may not reseal. In those cases the entire base pan may require replacement. Inspect the drain pan for broken lip, cracks, and plugged outlets. Be sure the drain pan is sealed to the base and look for water trapped under the plastic drain pan.Pressing on the center and edges of the plastic drain pan will move air bubbles that can be seen under it. Breaks, cracks or loss of seal between the plastic drain pan and the base will require replacement of the entire base pan on the unit. Cleaning of the drain outlets will correct problems with water that is trapped on top of the drain pan.

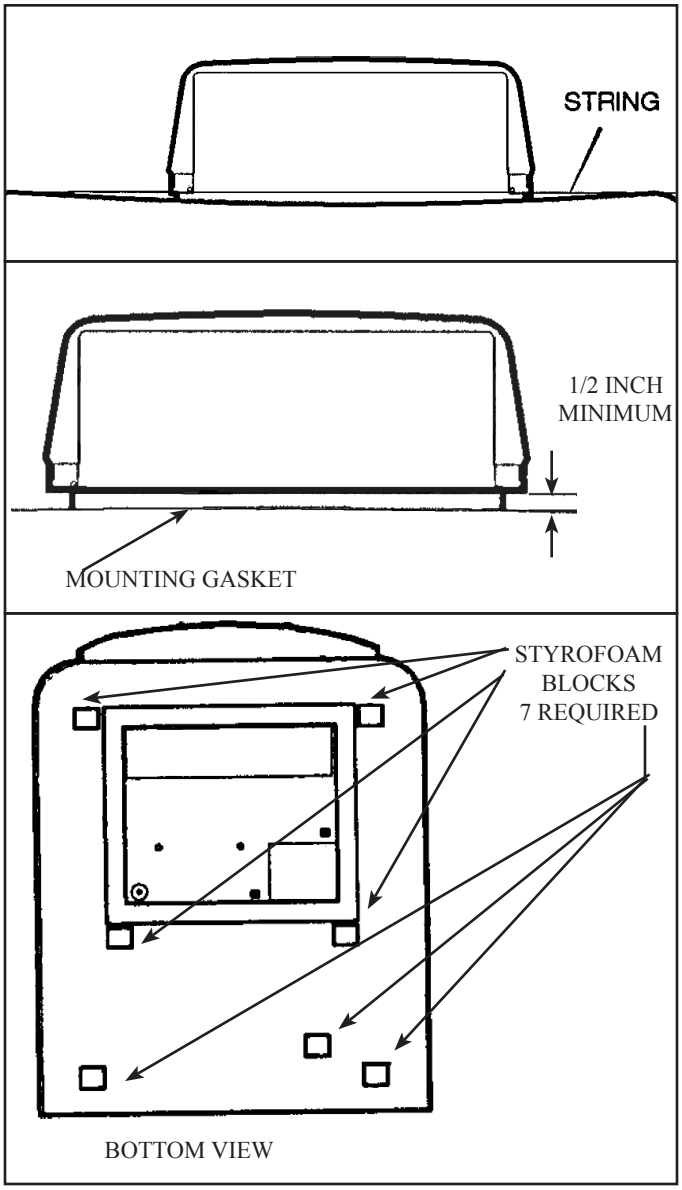

Leakage occurs only when the unit is running during high humidity conditions (80% relative humidity or higher). During high humidity conditions the evaporator coil will remove large quantities of water at a fast rate. The unit is designed to handle the increased water production. Unit is installed on greater than 15° slope. Units are designed to be installed on flat surfaces or on a slope of up to 15°.

Note: The closer to 15 degrees of front-to-back slant, the more likely water will overflow the drain pan. (Example: Sudden stops or turns while traveling could cause water to splash over the drain pan and into the RV.'s interior).

Always check installation for the unit you are working on. Under certain conditions frost may form and block the air flow through the evaporator coil. As the frost buildup grows, air velocity increases and allows moisture to be pulled off the coil. The frost may extend over the edges of the drain pan and drip into the return air opening of the base pan. If this occurs inspect the air filter and clean if dirty. Make sure the air louvers are open and not obstructed. To defrost the evaporator coil, turn the controls to high fan and do not operate compressor until the ice is gone. If the temperature is below 75° degrees outside, further operation of the unit should be at high fan speed only with the thermostat turned to a warmer setting. Ducted models are protected by a low temperature device to prevent frost buildup. If excessive frosting occurs, check air flow, cold control and recirculation of air. Check evaporator housing for air leaks During high humidity conditions (80% or higher), the blower can suck outside air into the evaporator bulkhead. This air contains large amounts of moisture that will condense on colder surfaces. Check completely around the evaporator coil cover to be sure it has an airtight seal to the evaporator bulkhead. Look for loose screws that secure cover to the evaporator bulkhead. Check putty sealant around area that refrigerant lines enter the evaporator bulkhead.

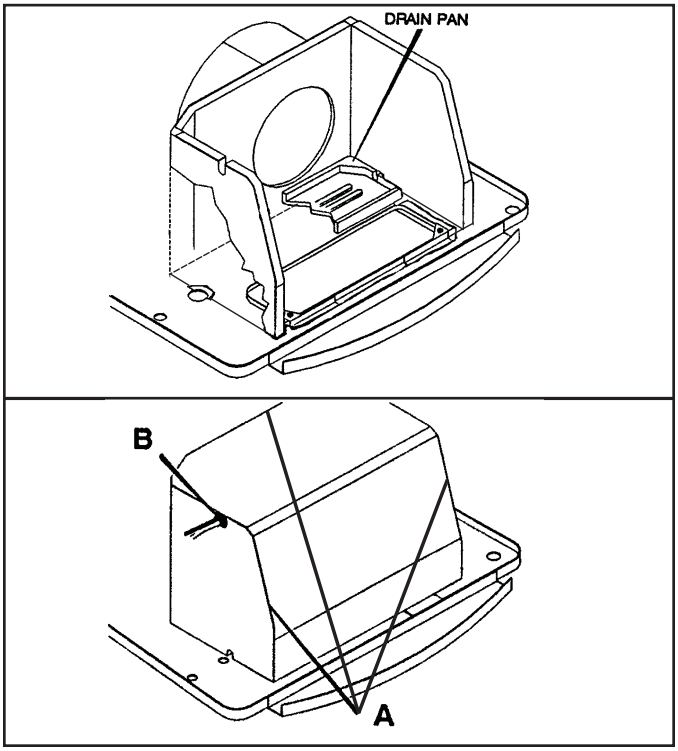

8.5 Temperature Differential Across Coil

An air conditioners primary job is to remove moisture from the air and secondary job is to cool the air. As the moisture is removed the degree drop will increase. The average degree drop across the coil should be approximately 18° to 20°. This is at lab conditions (50% relative humidity, 80 degrees inside, 95° outside at unit and exactly 120 VAC). Degree drop will vary depending on the humidity. In high humidity (80% relative or higher) conditions the degree drop across the coil may only be 12° to 16° (Tampa Florida). In low humidity (20% relative or lower) conditions the degree drop across the coil may be 23° to 26° (Phoenix Az). Turn the unit on high fan, lower the temperature set point and allow it to run wide open for 15 to 20 minutes. Use one thermometer and measure the temperature at the return air grill, and the temperature at the closest discharge to the air conditioner. The average degree drop should be 18° to 20°. Keep in mind your relative humidity when doing the degree drop.

Specification

Model Number	59516.33X(X)	59516.53X(X)	59516.631(X)
Nominal BTU Capacity*	15,000	15,000	15,000
Volts/Phase/Hertz (each circuit)	115 AC/1/60		
Compressor Run Amps	12.7	12.7	12.3
Compressor LRA	60	79.0	77
Fan Motor Run Amps	2.0	2.0	2.0
Fan Motor LRA	5.6	5.8	6.0
Heater Amps/Watts	12.7/1530		
Wire size**	Up to 24 ft.- Use No. 12AWG Copper Conductors		
AC Circuit Protection	20 Amp Time Delay Fuse or 20 Amp HACR Circuit Breaker		
DC Circuit Protection	Installation must comply with all National, State, Province, and/or electrical codes.		
Refrigerant	R-22		
System Refrigerant Charge (ozs.)	29	29	29.5
Installed Weight (lbs.)	102	102	102
Generator Size (KW) - Min***			
1 Unit	3.5	3.5	3.5
2 Units	5.0	5.0	5.0

Note:

* Maximum unit performance achieved at full rated voltage.
**For lengths over 24 feet, consult the National Electrical Code.
***Dometic Corporation gives general guidelines for generator requirements. These guidelines come from experiences people have had in actual applications. When sizing the generator, the total power usage of your recreational vehicle must be considered. Also keep in mind generators lose power at high altitudes and from lack of maintenance.

8.6 Amp Draw

All current Air Conditioners have 2 Data Tag on the unit that will give specific information needed to calculate the proper amp draw. First locate the data tag and note the Compressor Run Amps and write it down. The information on the data tag is accurate at lab conditions only (50% relative humidity, 80° inside, 95° outside at unit and exactly 120 VAC). If you had a 59516.531 at lab conditions the compressor amp draw would be 12.7. The compressor amp draw is affected typically by temperature at unit (Temperature at roof top surrounding AC). Turn the unit on high fan, lower the temperature set point on the thermostat and allow it to run wide open for 15 to 20 minutes. Note the following information after the 20 minute run time. The temperature at AC on roof (not just outside temperature but temperature at AC). Temperature inside coach (return air temperature), discharge temperature of closest supply (discharge). Once you have taken theses temperatures, use an Amp meter to measure the amp draw of the compressor. Once you have the amp draw we need to calculate according to temperature surrounding AC what the amps should be

59516.531 Roof Top AC

75 Degree	85 Degree	95 Degree	105 Degree	115 Degree
10.7 Amps	11.7 Amps	12.7 Amps	13.7 Amps	14.7 Amps

For every 10° F. less than 95° subtract approximately 1 amp. For every 10° F. above 95° add approximately 1 amp. This is an approximately reading you should get from the Compressor Load Amps. If you are with in 1.5 amp of the calculated amp draw, the charge should be OK. If the amp draw is more than 2 amps off the calculated draw and, there are no air flow problems, there could be a sealed system problem. Always check for proper air flow and voltage when running before condemning the unit.

8.7 Wiring

With the line circuit breaker off, check to see if the unit is wired correctly. Each AC is supplied with a wiring diagram. Check all wires for proper location and tightness. Refer to the Typical wiring diagrams and schematics.

Typical Wiring 459146.XXX

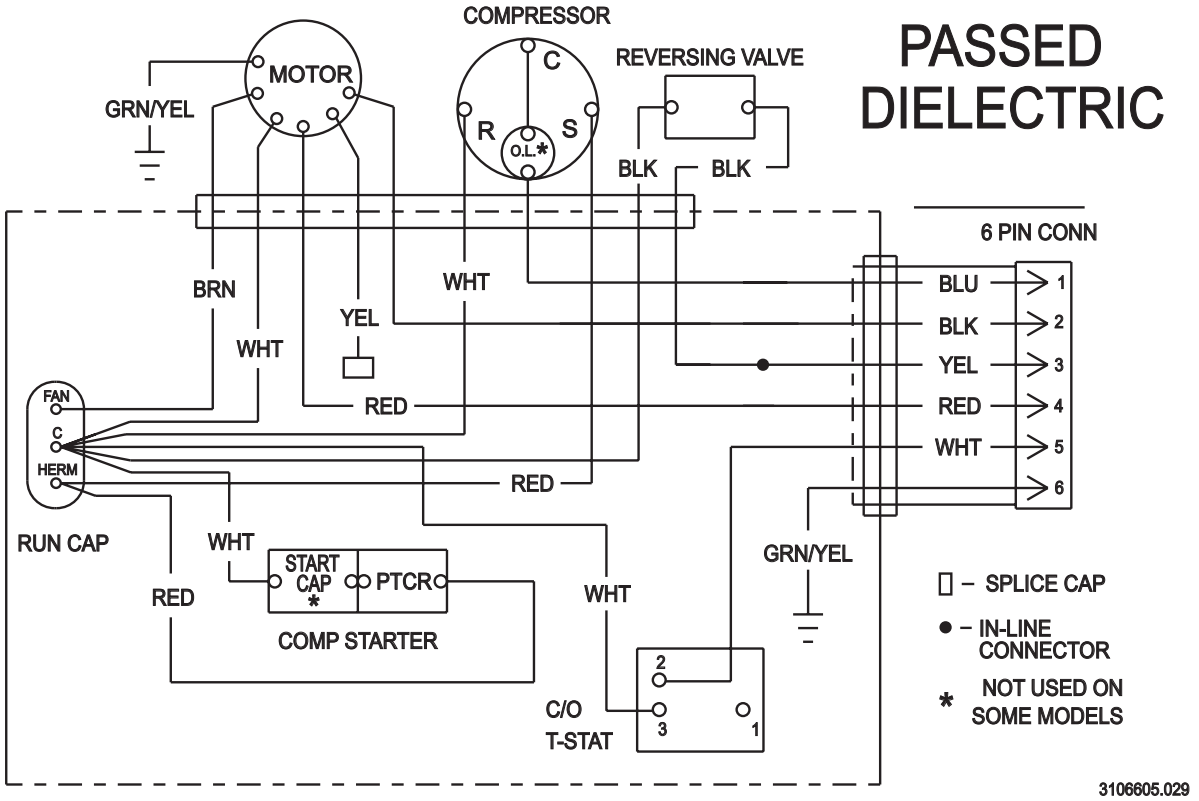

Typical Wiring 59136.XXX

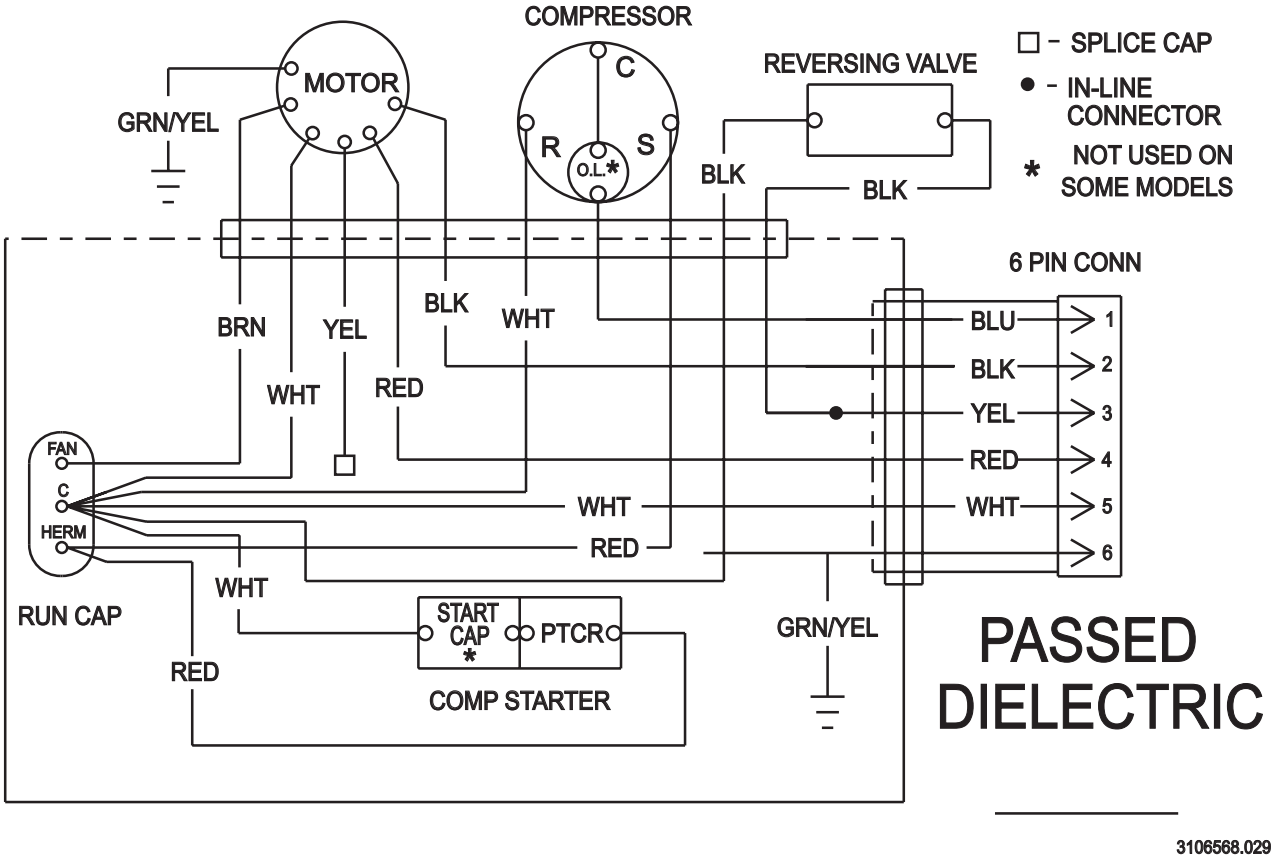

Typical Wiring 59516.XXX 5791X.XXX

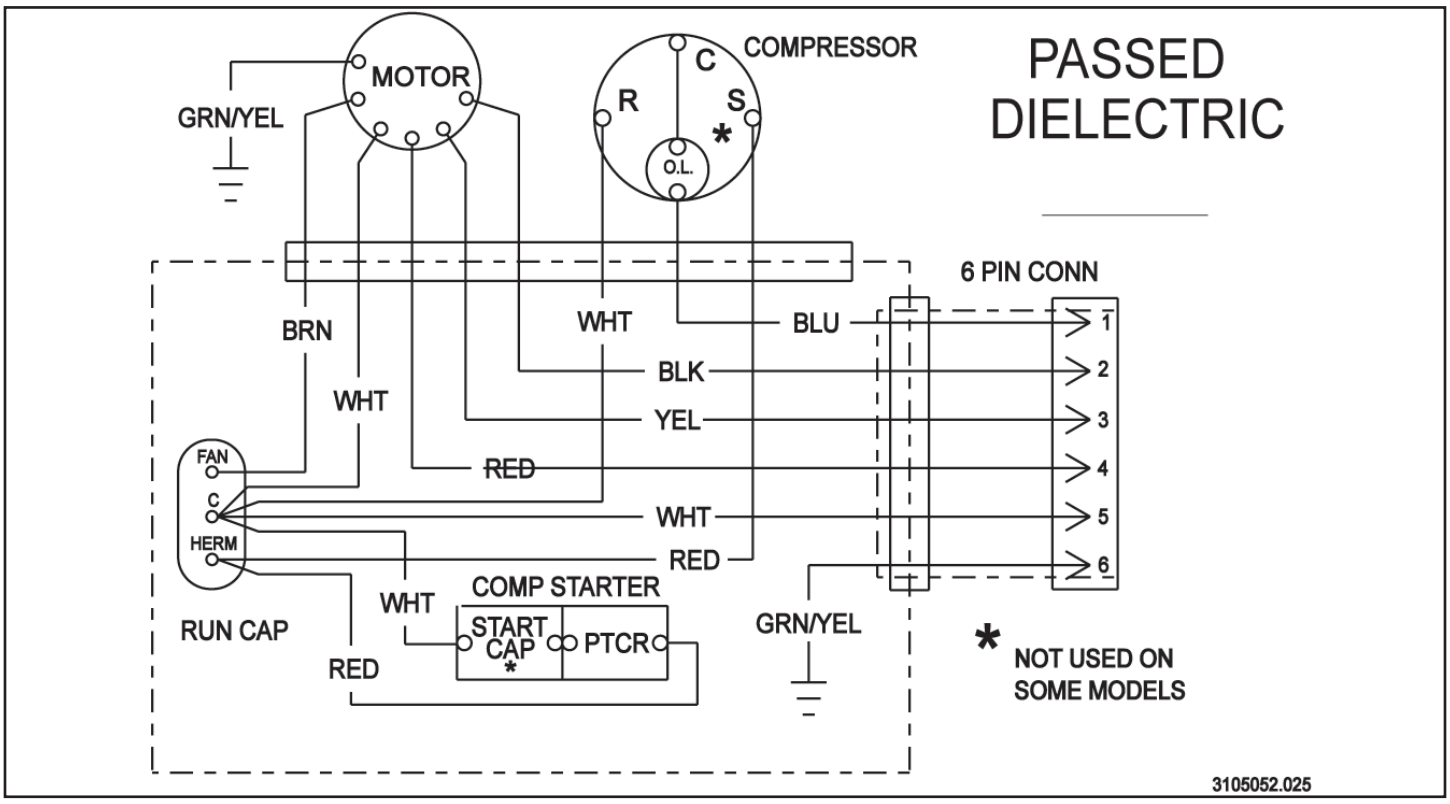

Typical Wiring 60031X.XXX

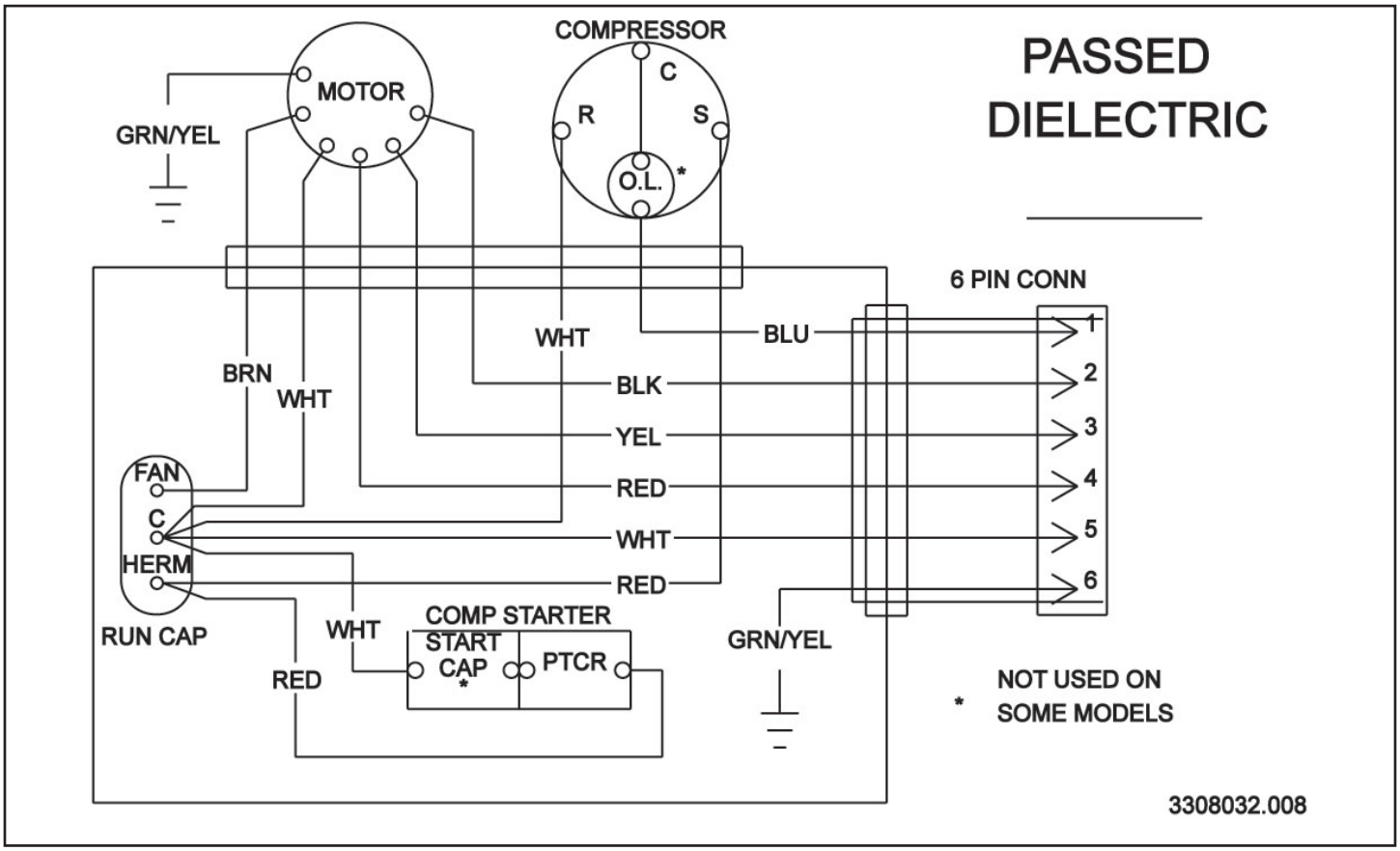

Typical Wiring 630035.XXX

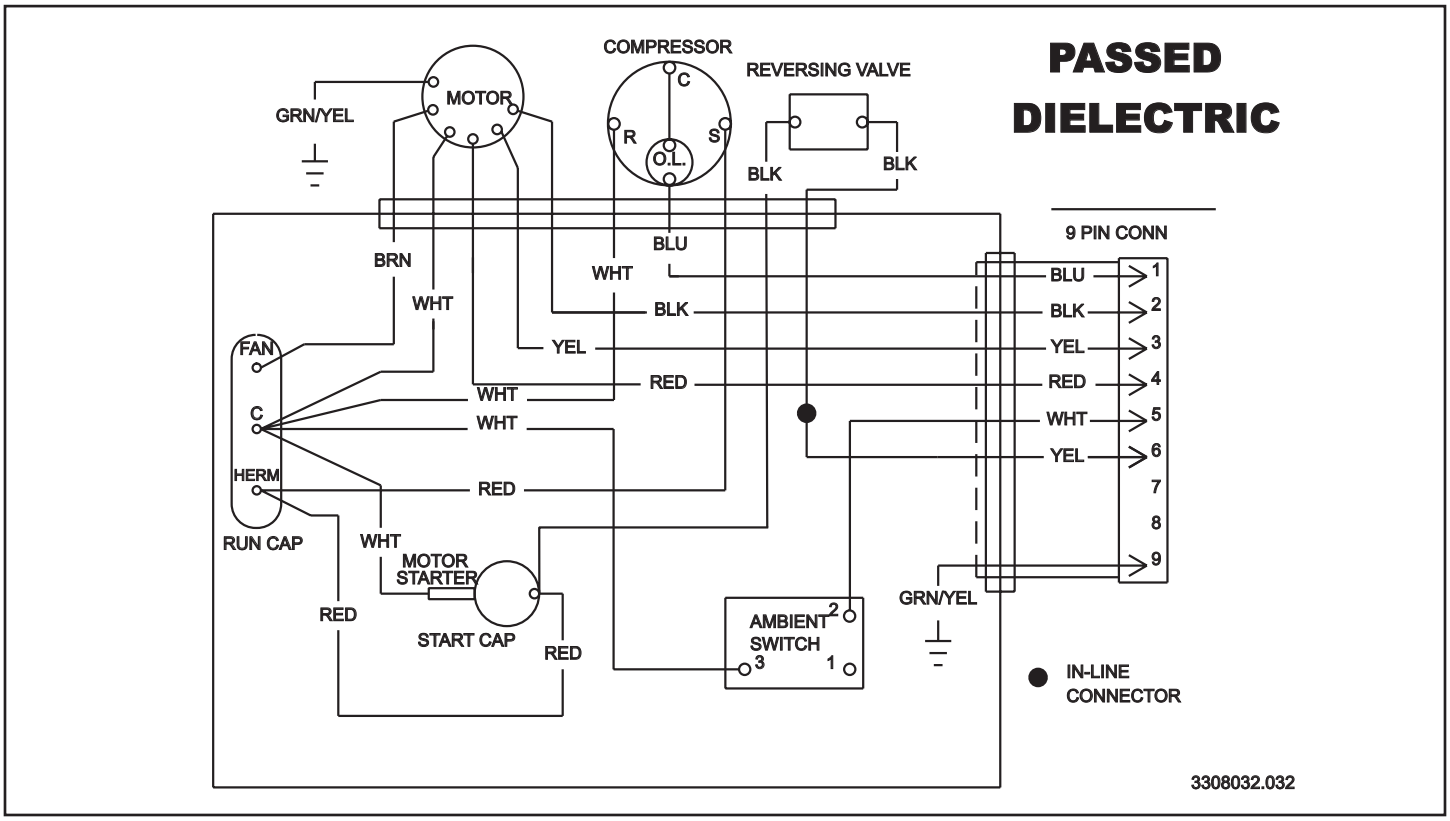

Typical Wiring 630515.XXX and 630516.XXX

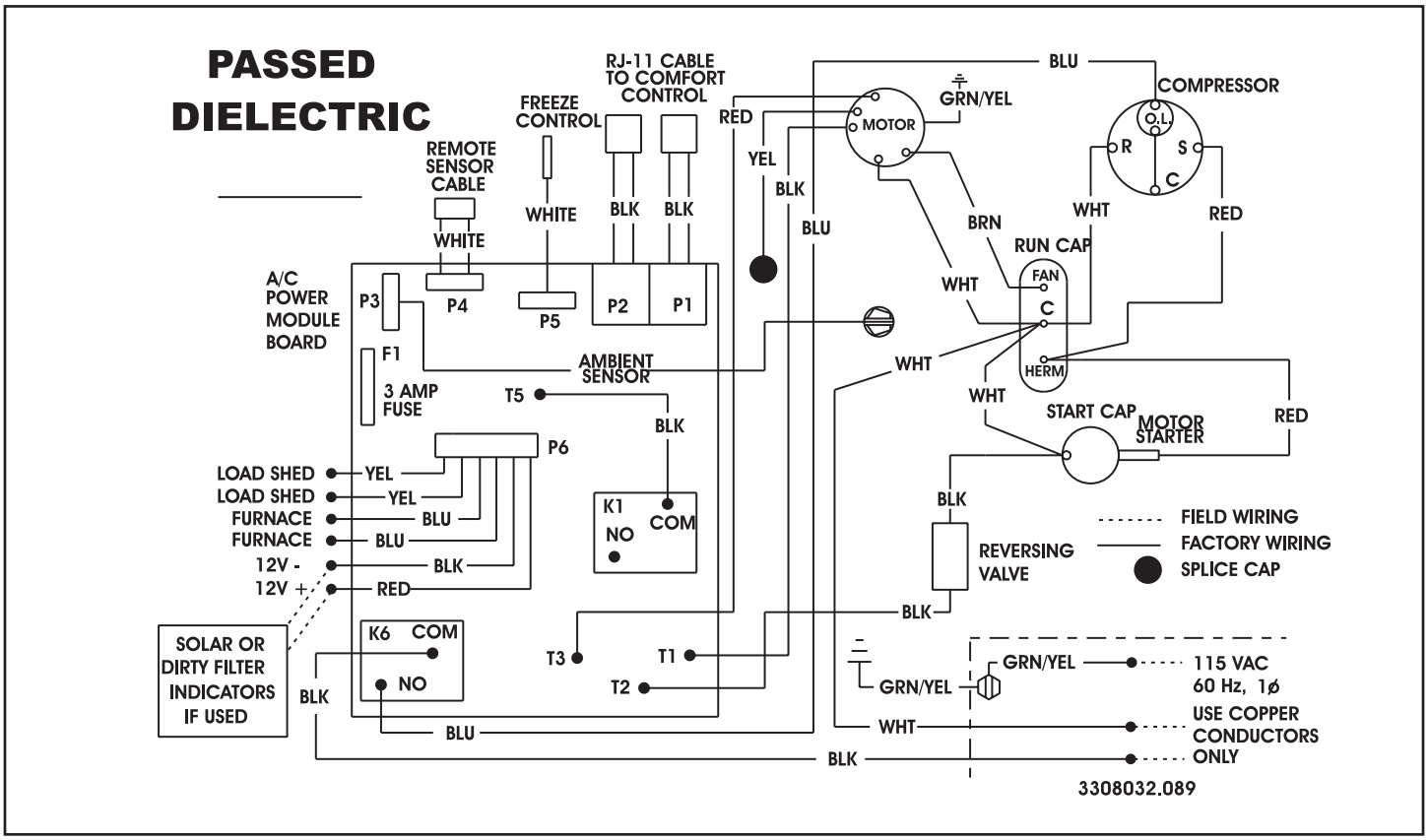

Typical Wiring 620515.XXX and 620525.XXX

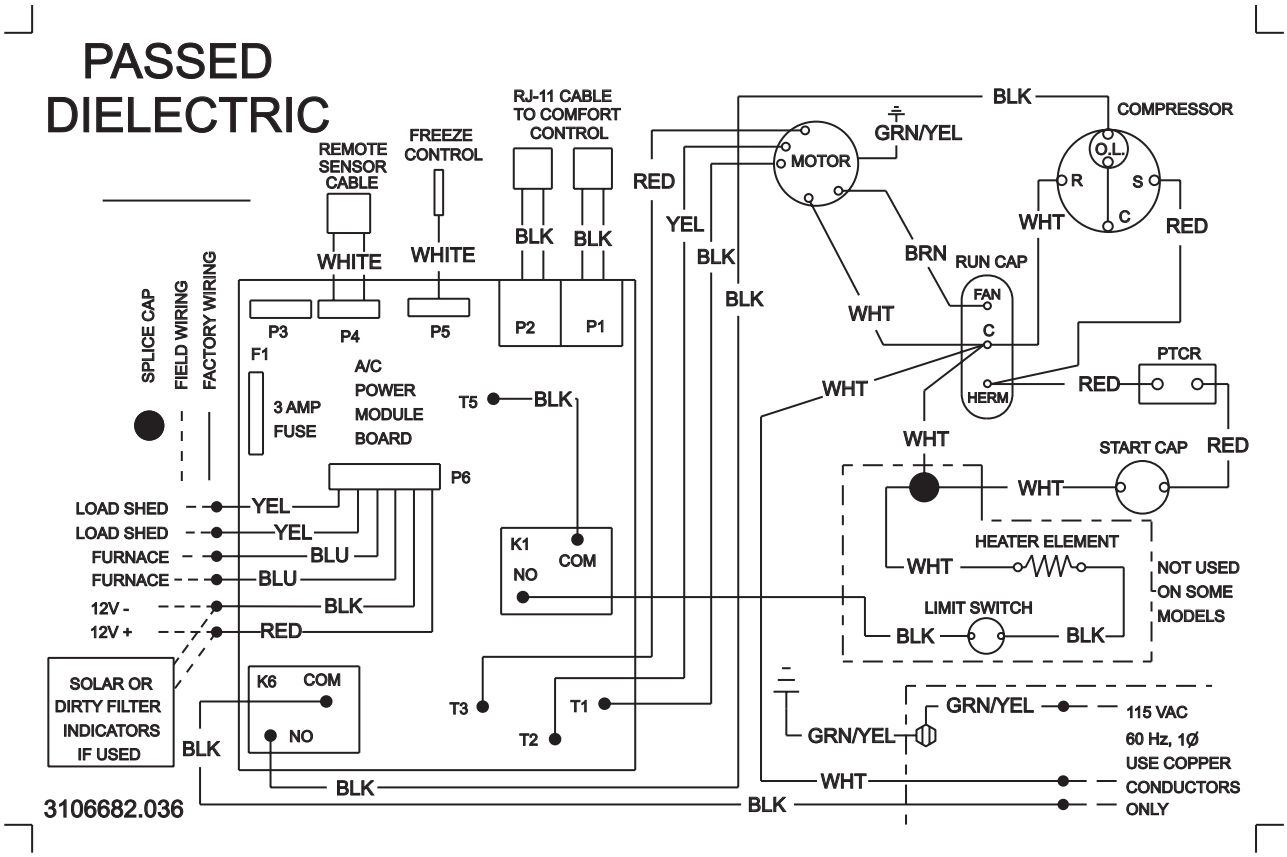

Typical Wiring 6204XX.XXX

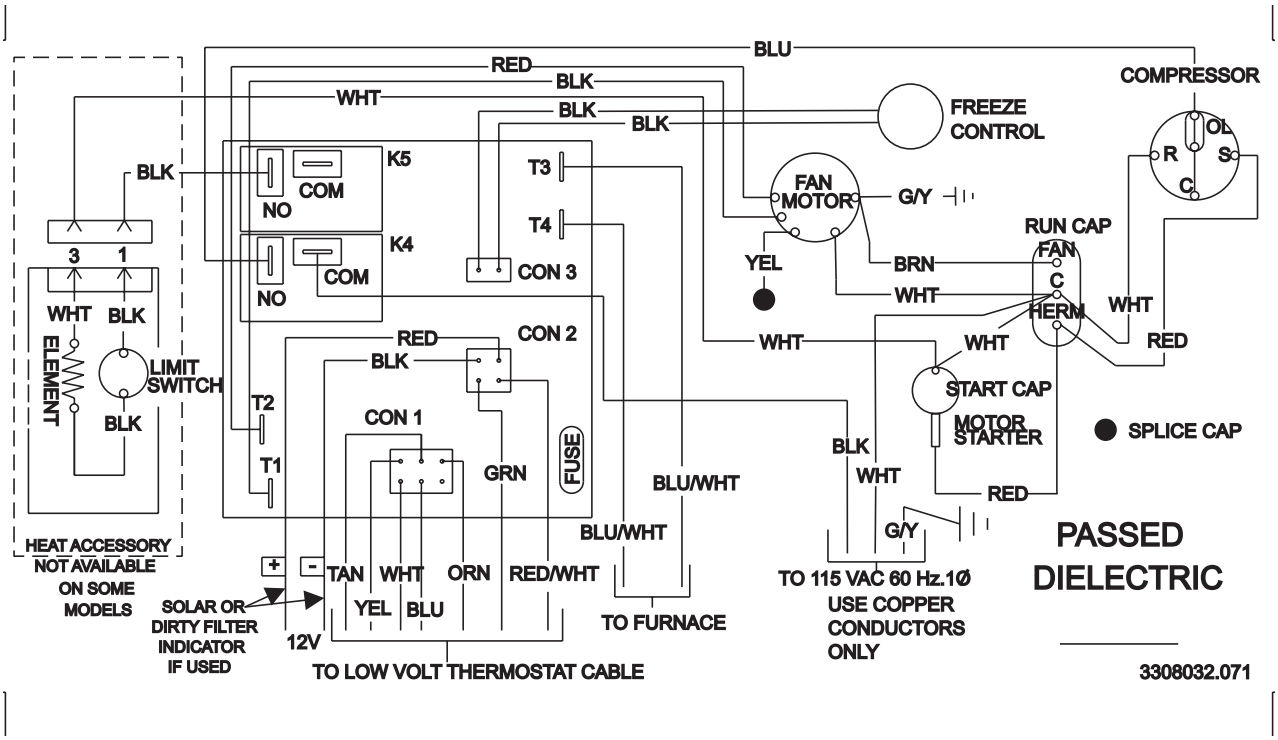

6206XX.XXX

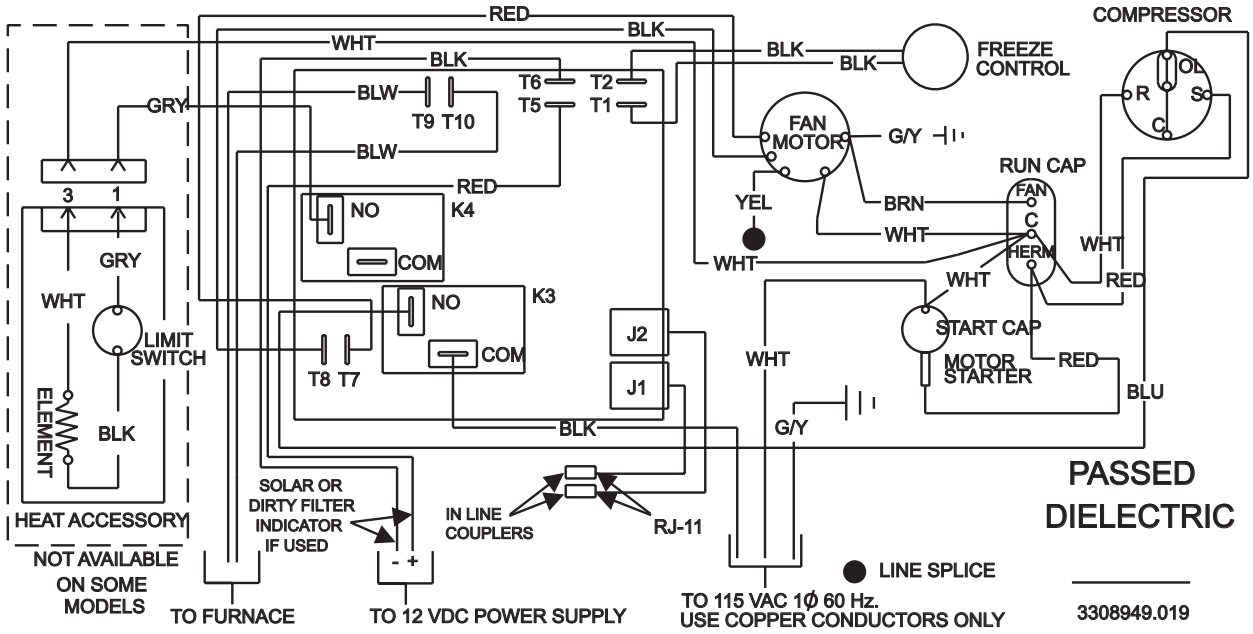

Comfort Control Board Wiring

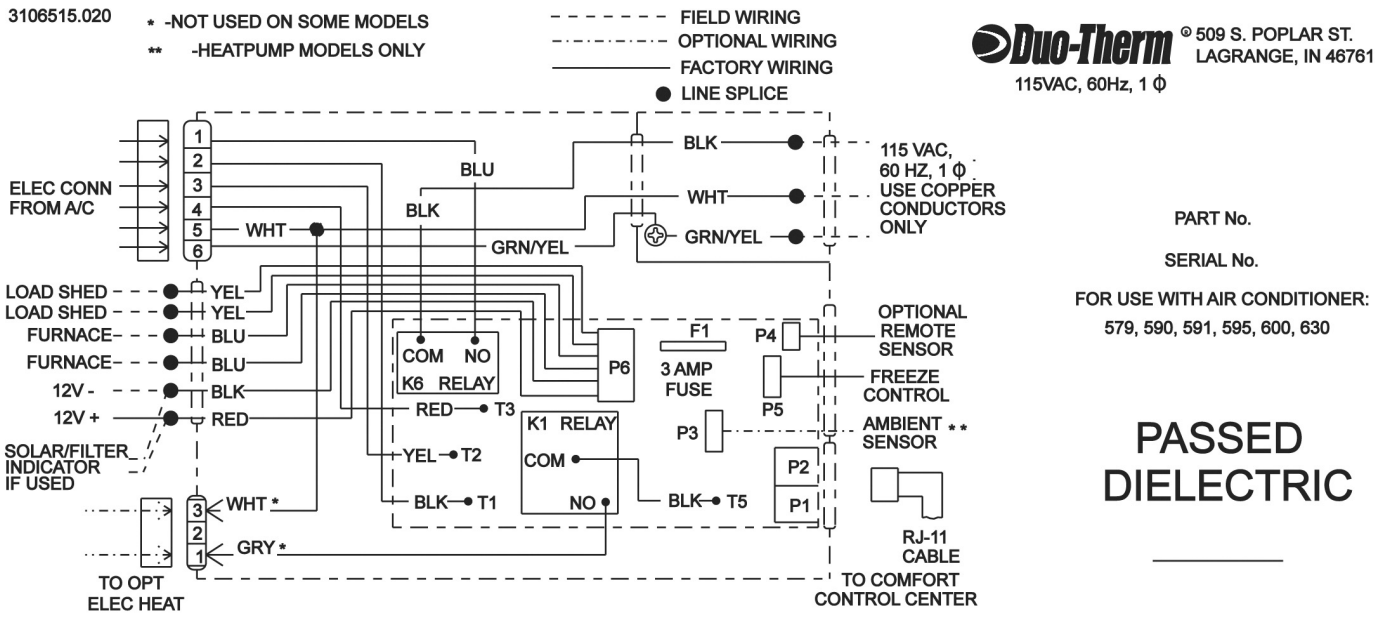

Typical Wiring 6418XX.XXX

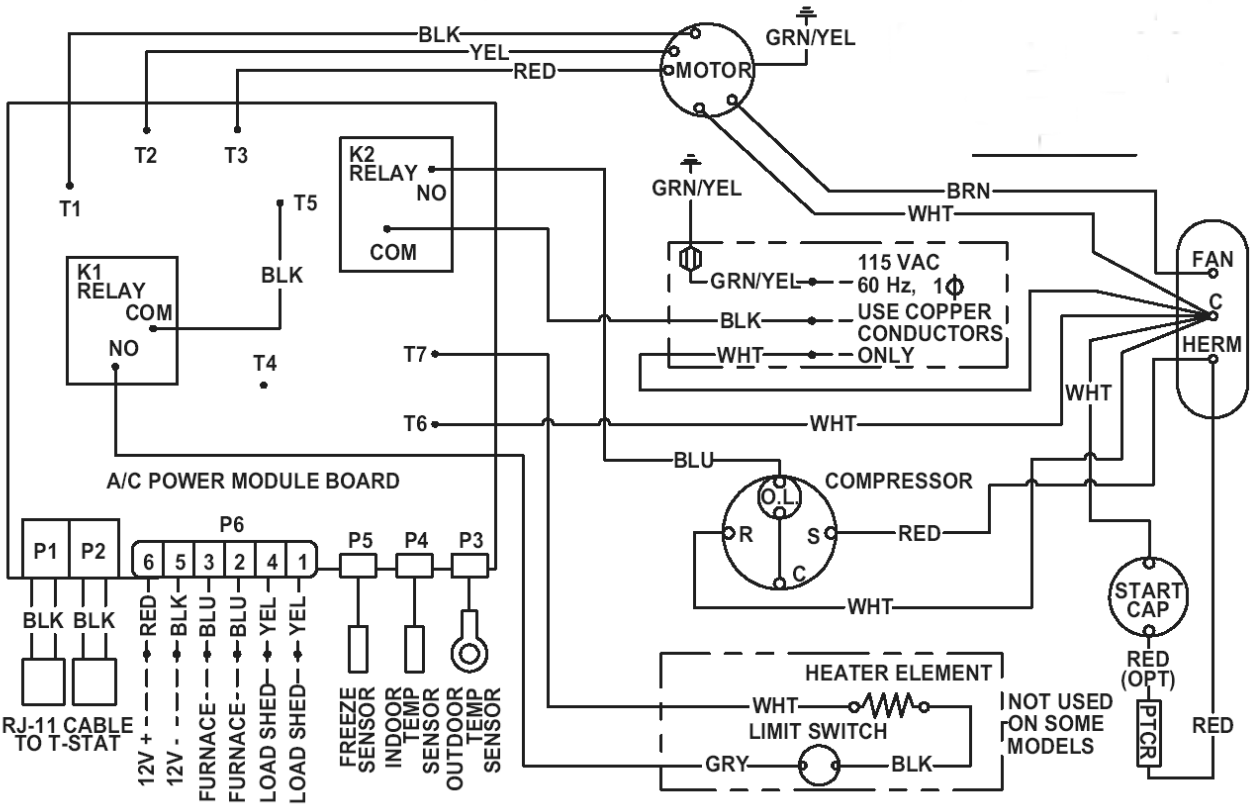

Typical Wiring 6518XX.XXX

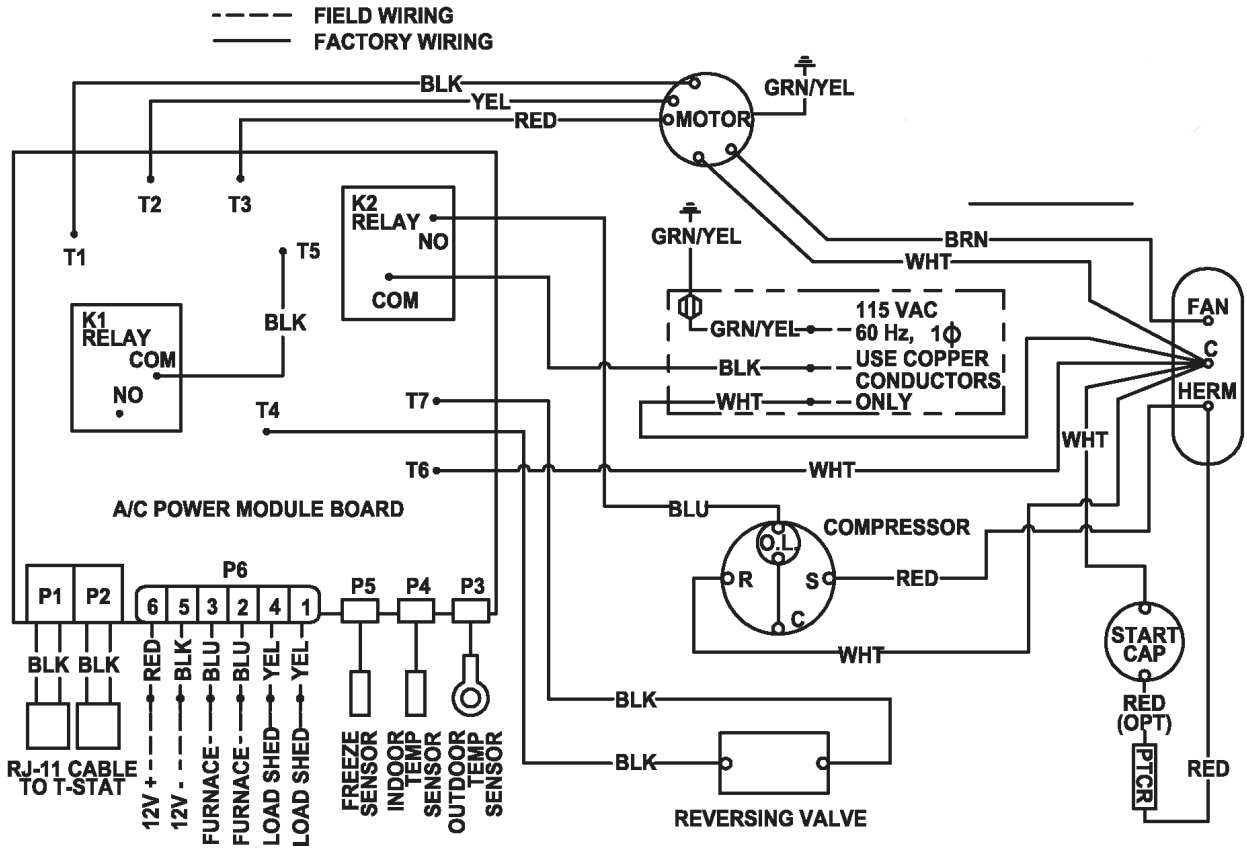

Typical Wiring 6419XX.XXX

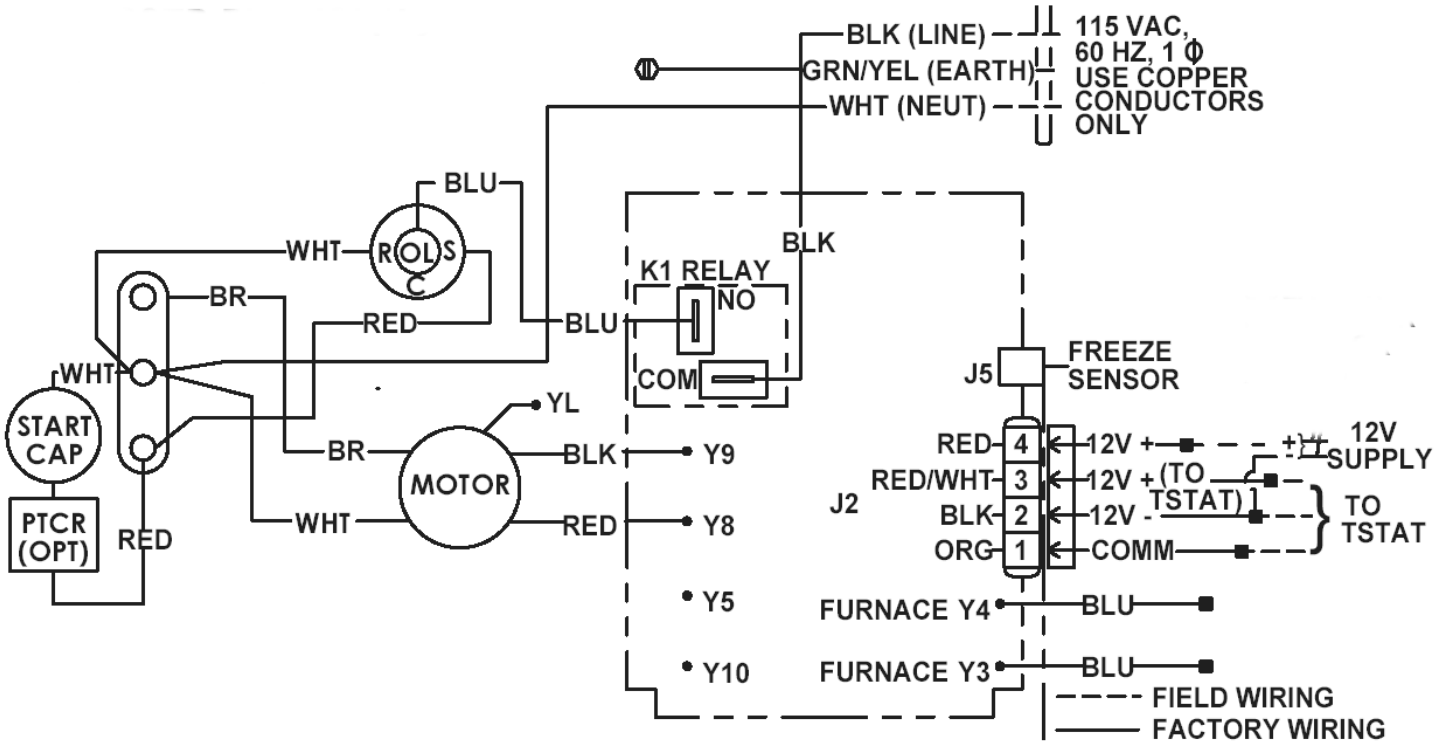

Typical Wiring 6519XX.XXX

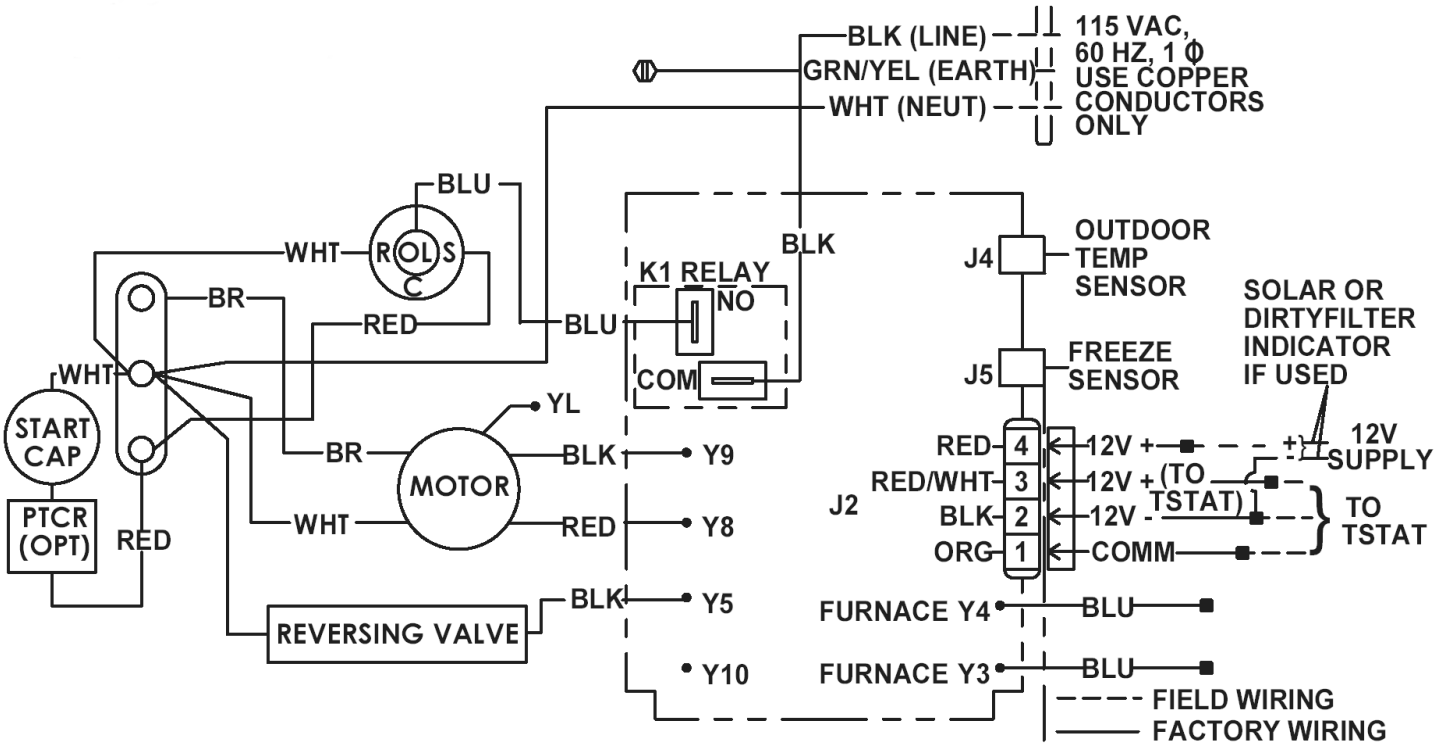

Wiring Diagrams Analog Systems

Wiring Diagram for 3107541.009 Cool & Furnace

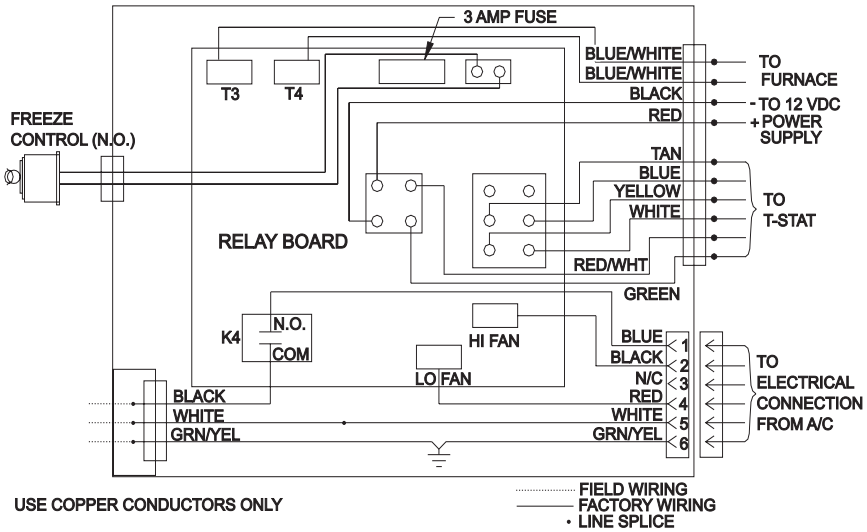

Wiring Diagram for 3107541.017 Cool, Furnace & Heat Strip

3107228.003

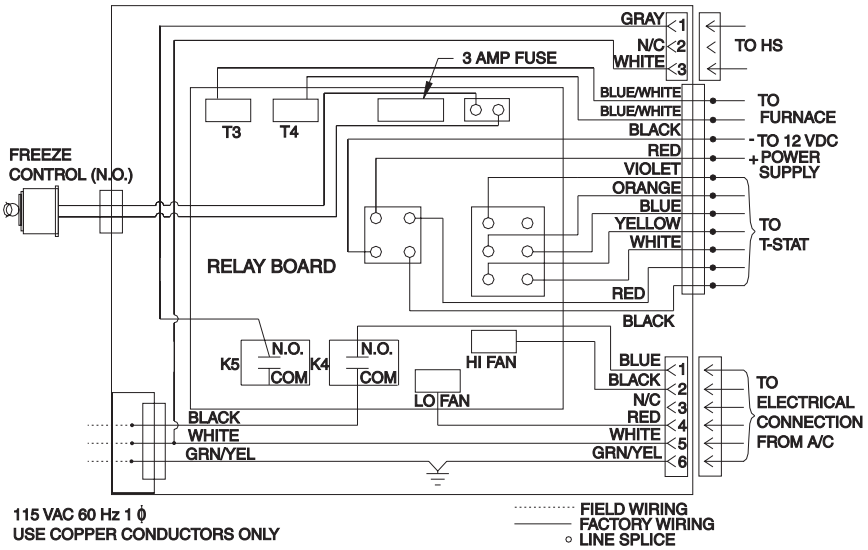

Wiring Diagram for 3107546.008 Cool, Furnace & Heat Pump

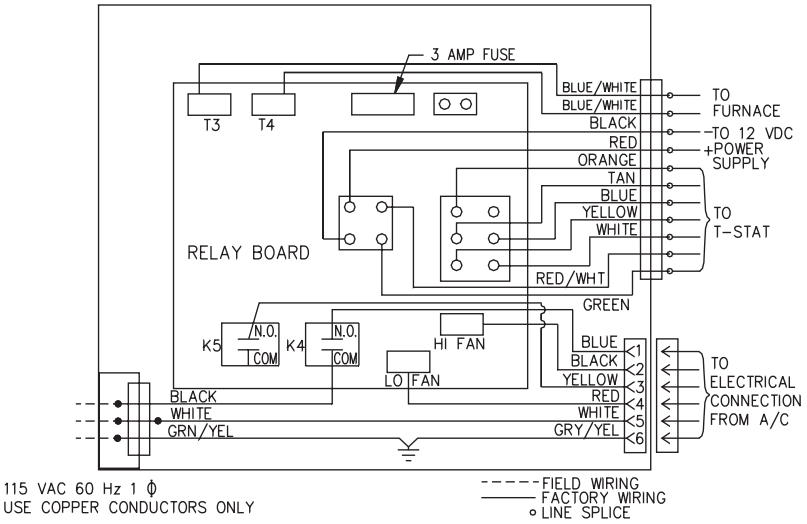

Air Box Field Wiring 3107206.XXX

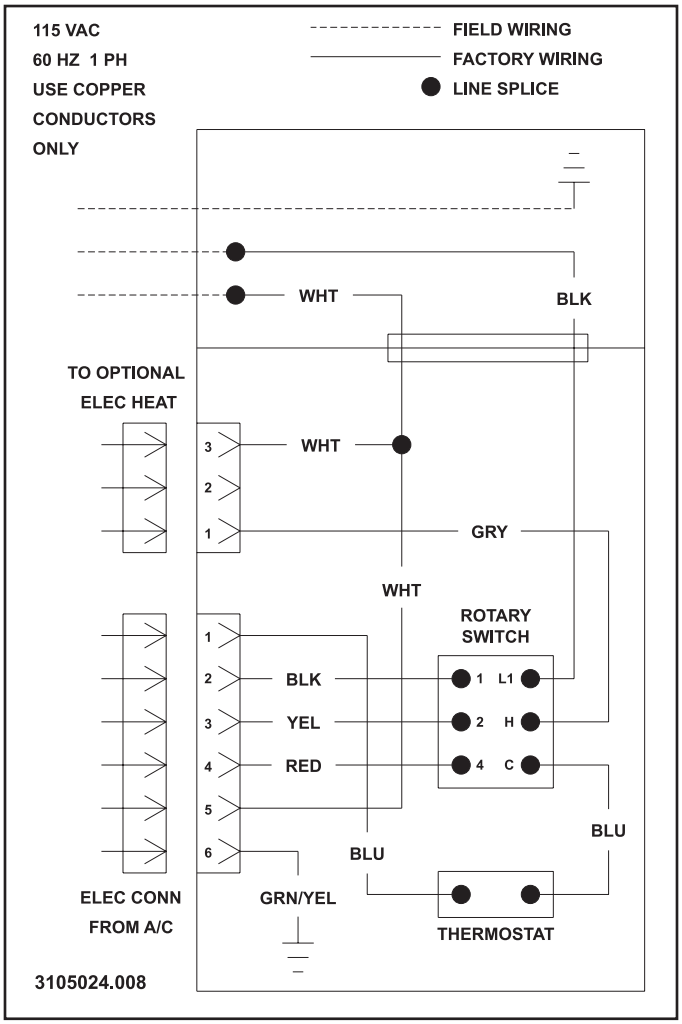

Air Box Field Wiring 3107211.XXX

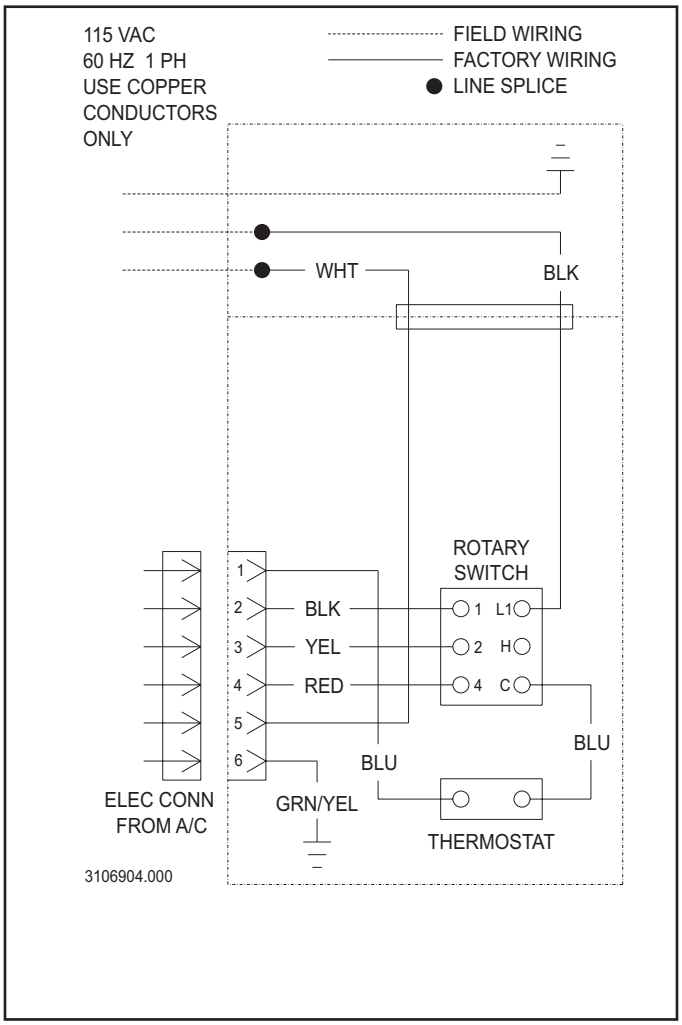

8.8 Short Cycle

Air Box

Short cycle is caused by cold air being drawn back into the intake side of the air conditioner before it is mixed with the warmer room air. This may cause the evaporator coil to freeze up, causing the cold control or the thermostat to open the circuit to the compressor. Cold discharge air that enters into the return air portion of the air box can cause a false temperature reading at the cold control thermostat and shut down the compressor. Two possible causes of this condition are the air box and the discharge duct. If the air box is not sealed tightly against the ceiling template, it will allow cold air to cross over into the return air portion of the air box. Also, if the discharge duct is not installed properly, it can allow cold air to cross over into the return portion of the air box. Make sure you have the correct discharge duct for the thickness of the roof. Seal all problem areas as necessary. You may need to use tape to seal the discharge duct. Also, make sure the discharge louvers are not restricted.

Ducted Installations

Short cycle could be caused by air being circulated directly on the thermostat or sensor. Make sure you do not have a register too close to the thermostat or remote sensor. Verify the duct connection at the unit is not leaking into the return air. Seal all problem areas. Reference Dometic bulletin A20-6B.

Section 9
Quick Tips

9.1 Mechanical Control No Compressor.
Turn power off and check in the following order.

1. T-stat test . Continuity
2. Selector Switch test. Continuity
3. Overload & Compressor test.

9.2 Comfort Control No Compressor and / or Fan.
First select high speed fan, not auto fan mode on the t-stat. If the fan runs a temperature sensor could be the problem.

1. Unplug ALL temperature sensors wait; 3 min utes and try again.
2. If multiple zones, unplug all other zones; wait 3 minutes and try primary zone alone.
3. Try a different DC power source and try again.

If one of the 3 sensors has a short it may not allow the compressor or fan to come on. A shorted ambient sensor could cause very erratic operation. The DC wires to the control system should be a dedicated line. There has been reports of things in the coach sending out RF (Radio Frequency) creating erratic operation or no operation at all. Disconnect DC power to all the components in the coach and run a dedicated straight line DC to the CCC control system and try again.
Always do a reset on the Comfort Control when no or erratic operation exist. Reference page 19 for reset.

9.3 Analog Tips
Analog control test for Compressor, Fan speeds and Furnace. All analog controls have 6 or 7 wires from control board to T-Stat. This test will by-pass the t-stat and harness in the wall. Disconnect all wires leaning from power module to thermostat. Check incoming AC and DC to control board for proper voltage. Follow the tips listed below.
When the ground wire from the control system is jumped to the listed wire, it should close the relay and activate that function. The thermostat provides a ground to close a relay. Using the wires from the control to test the following.

Green plus	Tan =	Low Fan
Green plus	Tan & Blue =	High Fan
Green plus	White =	Furnace
Green plus	Yellow =	Compressor
Green plus	Orange =	Heat Strip
Green plus	Orange =	Heat Pump

Green (ground) to the proper wire should activate the function from the control system. When Green to Orange is activated the heat strip should come on if unit has Heat strip. When Green to Orange on units with heat pump is activated, this will send voltage to the reversing valve. If the item (fan, compressor, furnace, heat strip) comes on the control module is OK the problem lies in the wires or t-stat. If there is still a problem go to control board testing.
Reference Dometic bulletin A27-8C.

9.4 CCC2 Tips and any digital controls.

First always do a System Initialization.
Note: The Single zone unit in the Heat Pump version reverc-ing valve could energized in AC (first generation) or heat pump (current production)

1. If multiple zones unplug all but single zone and reset.
2. If unit still erratic try straight line voltage then reset.
3. Try new control cable then reset.
4. Deaden the coach. unplug from shore power disconnect the batteries and run straight line DC to unit and AC voltage direct to AC and reset then test. If unit runs ok there is something in the coach giving off RF.

PRINCIPLES OF HEAT PUMP OPERATION

HEAT PUMP COOLING AND HEATING MODES:

Cooling Mode: Heat is removed from the **inside** air and released to the **outside** air.

Heating Mode: Heat is removed from the **outside** air and released to the **inside** air.

DEFINITION: A heat pump is one base unit which can operate in two modes, heating or cooling. The travel or flow of the refrigerant is reversed depending on which cycle you choose to operate, the heating cycle or the cooling cycle. The components used to accomplish this are the compressor, evaporator and condenser coils, reversing valve, capillary tubes, air movement system (motor and fan wheel), and refrigerant. The evaporator and condenser act as either the inside coils or the outside coils depending on the cycle of operation chosen.

THE COOLING MODE: To cool the air inside the vehicle, heat is removed from the inside air and released to the outside or ambient air.

To begin the cooling process, the air movement system establishes air flow which passes over both coils, the inside coil which in the cooling mode is the evaporator, and the outside coil, the condenser. Next, the refrigerant cycle is established starting at the compressor. The compressor's function is to take the low pressure vapor, and discharge it as high pressure vapor. As the refrigerant is compressed, it gives off heat causing the discharge line to be quite warm or hot to the touch in hot weather.

The high pressure vapor leaves the compressor through the discharge line and enters the reversing valve. The reversing valve routes the high pressure vapor to the outside or condenser coil. The high pressure vapor enters the outside coil (condenser) where, by passing through the coil, it is cooled and condensed into liquid. The heat is removed from the refrigerant, and expelled to the outside air. The refrigerant which began as a hot vapor, leaves the outside coil as a high pressure cooler liquid.

The high pressure liquid leaves the condenser and passes through the small capillary tube or tubes which will be warm to the touch. The capillary tube is the metering or flow control device in the sealed system. It determines the amount and force of refrigerant which enters the inside coil, or evaporator in the cooling cycle. For optimum efficiency, the capillary tube's length and diameter must never be altered.

The high pressure liquid refrigerant enters the inside coil/evaporator in a controlled amount from the capillary tube. The liquid enters the low pressure atmosphere of the inside coil and evaporates into vapor. During the evaporative process, heat is removed from the air flowing through the inside coil and the air, which is now cool, is returned to the inside of the vehicle via the air movement system (blower assembly).

After leaving the inside coil (evaporator), the low pressure refrigerant vapor returns to the reversing valve. The reversing valve routes the low pressure vapor to the compressor through the suction line to start the cooling process all over again.

THE HEATING MODE: To heat the air inside the vehicle, heat is removed from the outside air or ambient temperature, and released to the inside air.

When you heat a vehicle, the air conditioning process is reversed, with the compressor sending the high pressure vapor into the reversing valve which routes the vapor to the inside coil, which in the heating mode is the condenser coil.

The high pressure vapor enters the inside coil (condenser) where it is cooled, and condensed into liquid by passing through the coil. The heat removed from the refrigerant is expelled to the inside air by the air movement system. The refrigerant leaves the inside coil as a high pressure liquid.

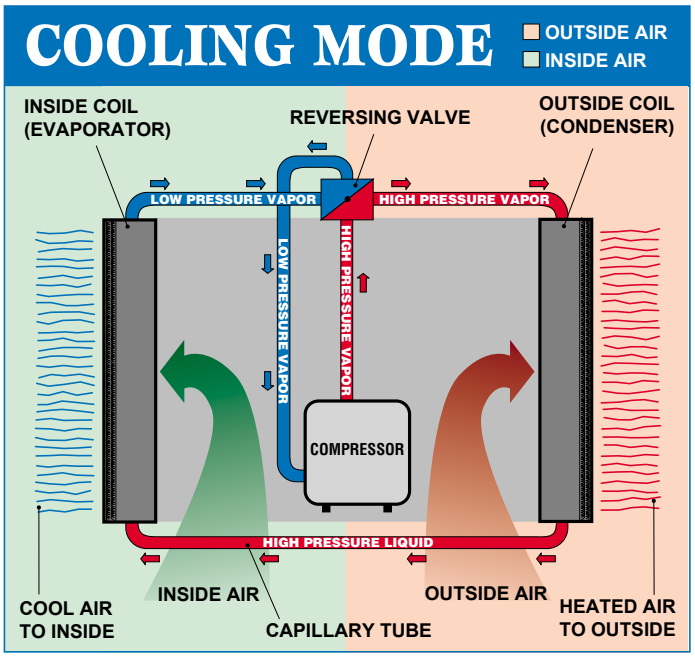

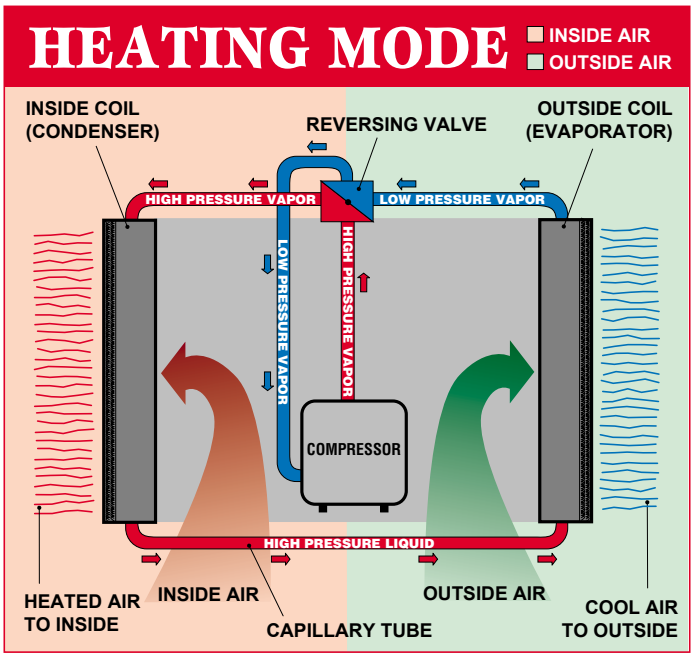

As the high pressure liquid leaves the inside coil (condenser) it passes through the small capillary tube or tubes, which act as the metering or flow control device in the sealed system.

The high pressure liquid refrigerant enters the outside coil (evaporator) in the controlled amount from the capillary tube. When the liquid enters the low pressure atmosphere of the outside coil (evaporator) it evaporates into vapor. When the evaporative process takes place, heat is removed from the air flowing through the outside coil (evaporator) and the air, which is now cool, is returned to the outside air (ambient) via the air movement system (blower assembly).

From the outside coil (evaporator), the low pressure refrigerant vapor returns to the reversing valve. The reversing valve routes the low pressure vapor to the compressor through the suction line to start the heating process again.