SLIDETOPPERS, WINDOW & DOOR AWNINGS

DEALER TRAINING

MAY 2020

Mobile living made easy.

DOMETIC

HOUSEKEEPING

Welcome To Training

Dana Bright, Product Training Manager

- **MUTED** during training
- **QUESTIONS** during training, send **Privately** or **Send to All**
- **QUESTIONS** after training, email training@dometic.com
- **DURATION** ‘1’ hour
- **FREQUENCY** ‘1’ per month
- 3 ways to **REGISTER FOR TRAINING**
- 3 ways to access **PAST TRAINING SESSIONS**

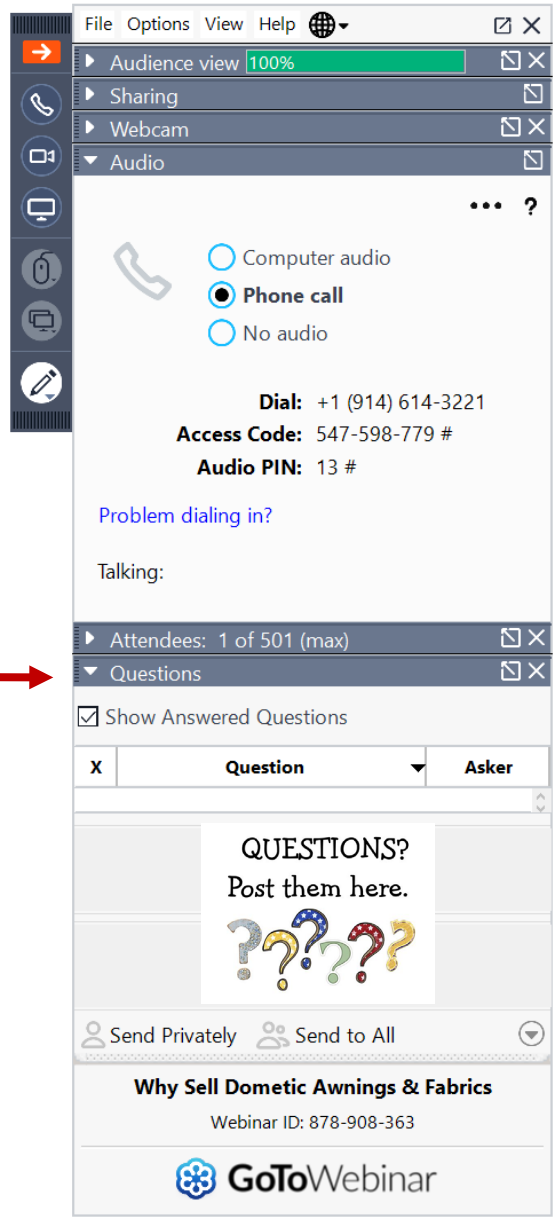

DOMETIC FOR BUSINESS

the new B2B customer portal

1. Go to www.dometic.com click **FOR BUSINESS** at top of page, sign in

2. Click **TRAINING WEBINAR** Tile

3. Click **Register for Training**

   (or)

   Click **Past Training Sessions**

Knowledge is power, so why not attend our monthly product webinars? Sign up by registering in the link below, don't forget to accept the invite into your calendar when you receive the confirmation e-mail.

Register for Training

Best of all, live training sessions are recorded and made available to watch at your leisure by clicking the past training's button. Enter this password Training2020! when prompted.

Past Training Sessions

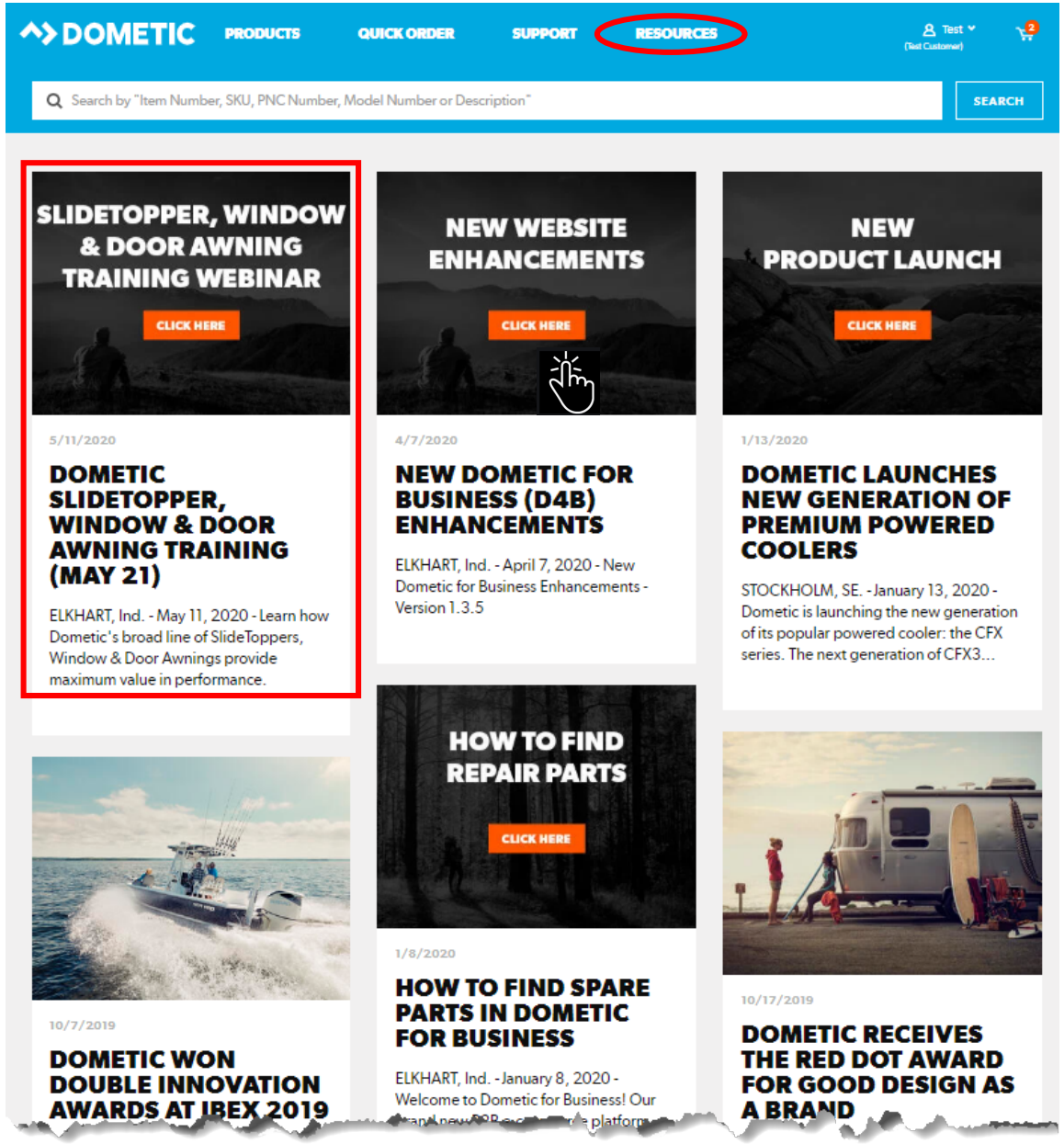

COMPANY OVERVIEW

PRODUCT CATEGORIES:

- CLIMATE
- FOOD & BEVERAGE
- HYGIENE & SANITATION
- POWER & CONTROL
- OUTDOOR / CAMPING

Employees

8,400

27 manufacturing assembly plants in

11

countries

Sales offices in

30

countries

Products sold in

100

countries

AGENDA

- **SlideTopper Awnings**
  - Testimonial
  - Everybody Wins
  - Benefits of SlideTopper
  - Anatomy of SlideTopper
  - 2020 Models (Good, Better, Best)
  - 2020 Models Key Features
  - Hardware (Old vs. New)
  - Replacement Parts & Fabric
  - Mounting Brackets (Tall & Short)
  - Determine Fabric Size
  - Common Customer Service Calls
- **Window Awnings**
  - 2020 Models (Good, Better, Best)
- **Door Awnings**
  - 2020 Model
- **Value Proposition: Why Sell Dometic**
- **Resources**
- **Questions**

MOTORHOME AWARDS

HVAC/Comfort Systems- GOLD
Toilets- GOLD
Refrigerators- GOLD & BRONZE (Dometic & Atwood, respectively)
Awnings- SILVER

165,000 monthly subscribers

TRAILER LIFE AWARDS

Awnings- GOLD
HVAC/Comfort Systems- GOLD & BRONZE (Dometic & Atwood, respectively)
Toilets- GOLD
Refrigerators- GOLD

260,000 monthly subscribers

SLIDETOPPER AWNINGS

Deb and I are big fans of our Dometic SlideToppers and Window Awning. *We camped 311 nights last year, 200 boon docked. Our slide toppers not only provide debris protection but aid with climate control. Since slide roofs have less insulation, the slide toppers keep the inside cooler by allowing shade and air gap above our 3 slides. As you mentioned, the awning slides do a nice job too.* ***Last week we were in Mesa, AZ … daytime temps were in the 90's … we were in direct sun, our window awning was on the Southside and we were able to stay comfortable inside only running one AC. Without the toppers and window awning we would have needed to run both ACs.***

Jeff & Deb Spencer, Dometic Product Management Consultant

EVERYBODY WINS

Maximize the sale and margins at time of purchase by helping the buyer see benefit of SlideToppers, Window and Door awnings. Some Dealers make them a core tenant of every sale, adding 1-2k to every coach before it rolls off the lot.
Add to PDI process.

Tangible benefits to the RVer who can accessorize at time of purchase and then blend the add-on spend into the total payment for a few dollars more per month. SlideToppers protect the investment, Window Awnings keep interior cooler, while Door Awnings shade and protect entryway.

BENEFITS

- **Provide shade** to help keep your room cooler
- **Helps reduce pollen and allergens** from riding on top of the slide out and into the living space
- **Bristles sweep away leaves and other debris**
- **Conserves battery** when only have to run ‘1’ AC versus 2
- Protection from elements **extends life of the slide out**

Protect Your Investment

SLIDETOPPER ANATOMY

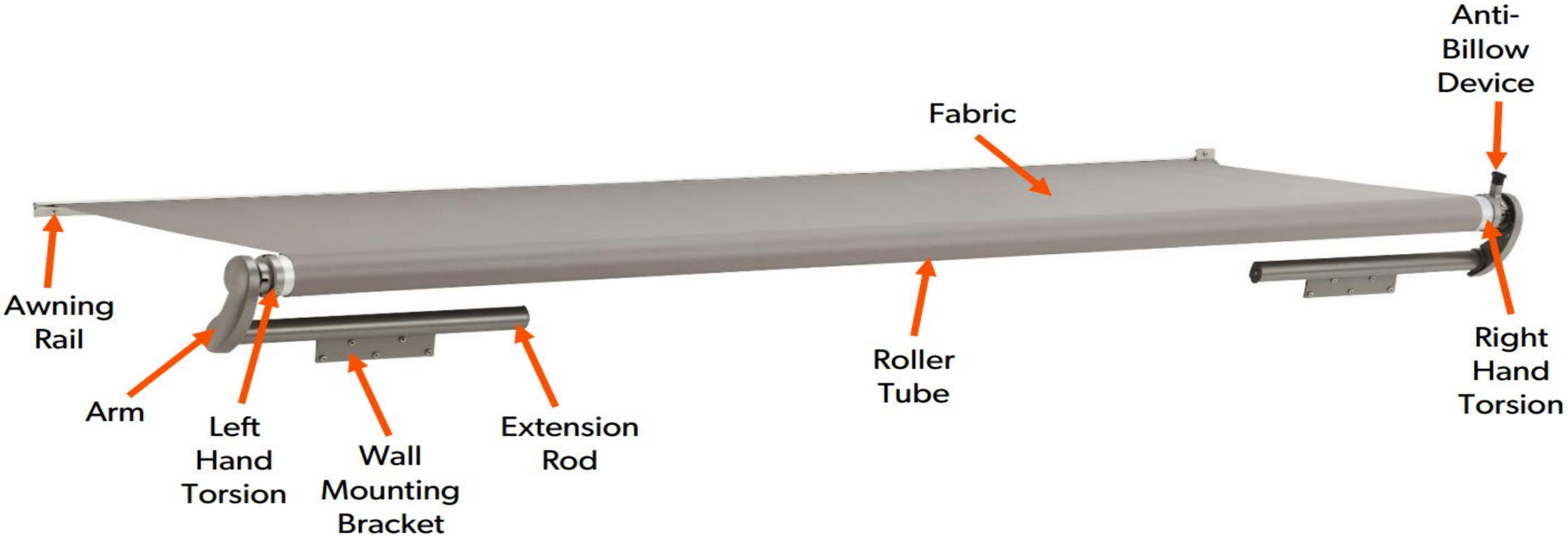

2020 MODELS

DELUXE (GOOD) Vinyl Fabric Vinyl Weathershield

ELITE (BETTER) Vinyl Fabric Metal Weathershield

FULL COVER (BEST) Vinyl Fabric Enclosed Metal Case

KEY FEATURES

- Easy installation, pre-assembled hardware
- Standard and Full Cover models
- Lengths up to 363” (30’3”)
- Weathershield in vinyl or metal (under 198” lengths, 16.5’)
- Standard 13.5 oz. durable vinyl fabric
- Double sided fabric has applied premium embossed texture
- Stitch & staple free, hot air welded, leak resistant seams
- Black (FJ) or Polar White (CQ) solid colors
- Hardware Brackets offer 45° (Tall) or 90° (Short) clearances
- Dual-torsion springs, more fabric tension
- Anti-Billow Device (Std), prevents unraveling while in motion
- Cradle Kit to support longer lengths (Deluxe & Elite)
- 1 Year Parts, Labor & Freight Warranty
  Awning fabric has 30-day material & freight damage examination period

C-Shape End Cap
Wind Protection

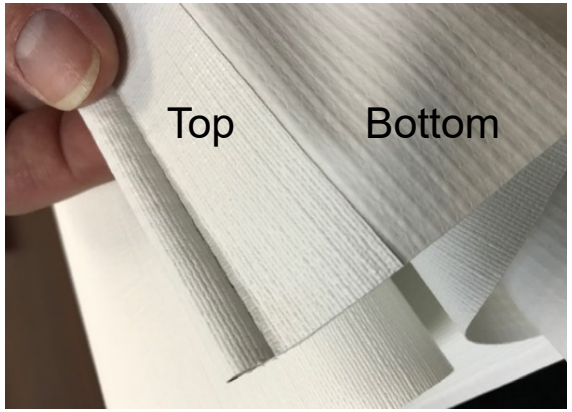

Premium Embossed Texture
Stitch Free, Hot Air Welded
Leak Resistant Seams

Anti-Billow Device

NEW HARDWARE

DESIGN FEATURES

- C-Shape end cap, not attached to torsion spring
- C-Shape not backwards compatible with Hex-Shape
- Half Circle extension rod, only comes hollow
- Pre-Assembled end cap, extension rod, mounting bracket

BENEFIT

- Less installation steps since hardware is pre-assembled

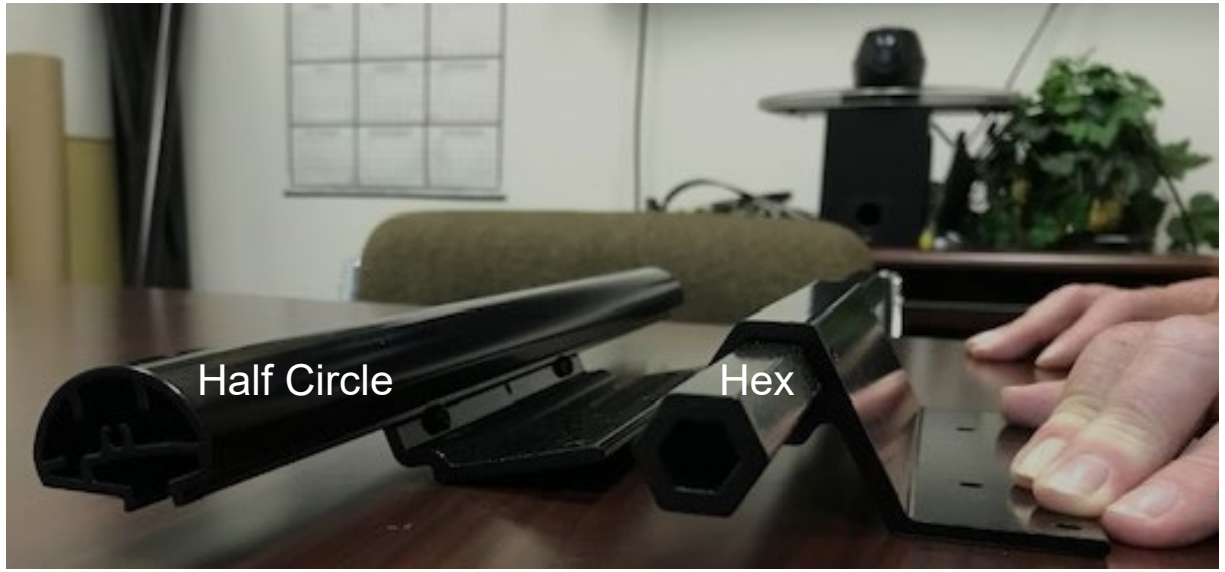

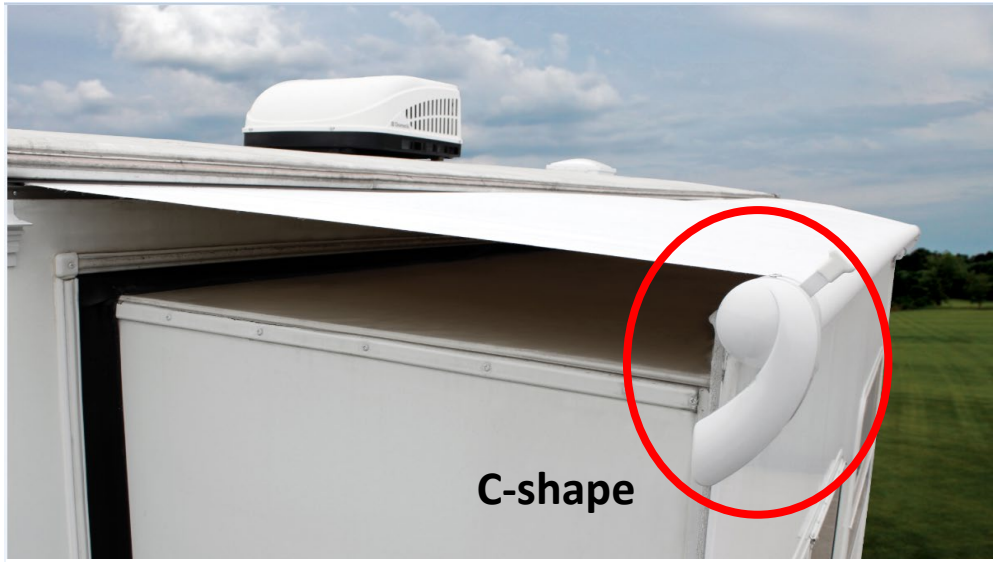

PRE-ASSEMBLED HARDWARE

HEX STYLE

Assembly Required

Torsion Spring
End Cap attached

“NEW” C-SHAPE STYLE

Pre-Assembled

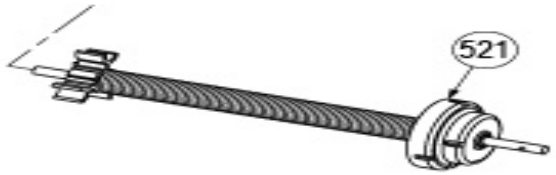

Torsion Springs
End Cap <u>not</u> attached

Anti-Billow
Device

Half Circle vs. Hex-Shape

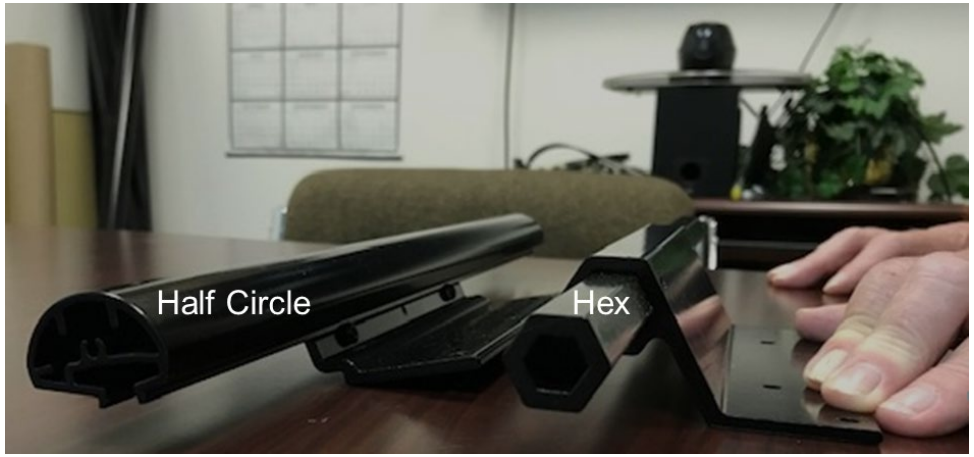

Half Circle vs. Hex-Shape

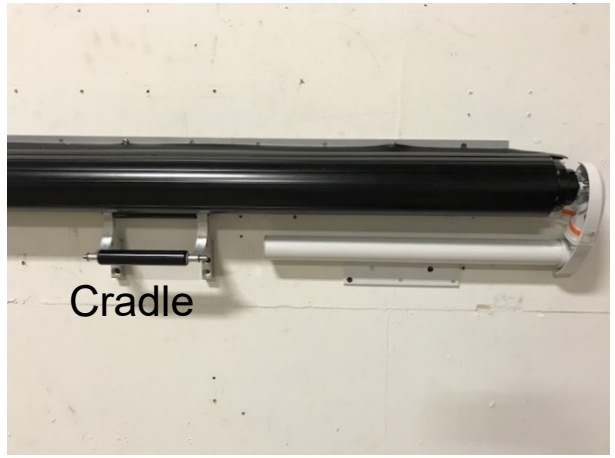

Pre-Assembled Hardware

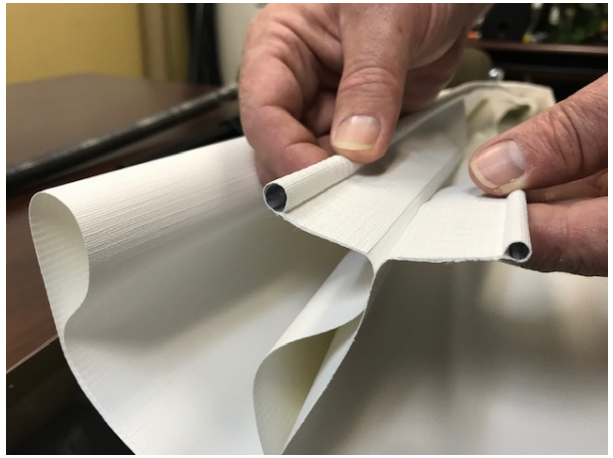

UV, Moisture & Chemical Resistant Polyester Rope

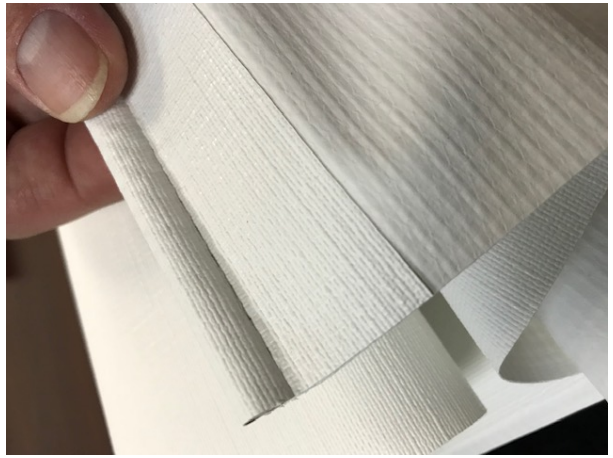

Stitch Free, Hot Air Welded Leak-Resistant Seams

Premium Embossed Texture

C-SHAPE HARDWARE INSTALL WITH TALL & SHORT BRACKETS

Installation Tip!
Be cognizant of the vertical ‘clearance’ between the Awning Rail and Slide Out Room Flange to ensure the SlideTopper fabric does not touch the Slide Out Room Flange when running in and out.

Example B:
TALL mounting bracket elevates the fabric for more clearance. <u>The width of the typical flange has led to most installations using the tall bracket kit</u>.

Example A:
SHORT mounting bracket reduces the clearance between the Awning Rail and top of the Slide Out Room Flange which can cause the fabric to touch during operation of the slide out room.

TALL

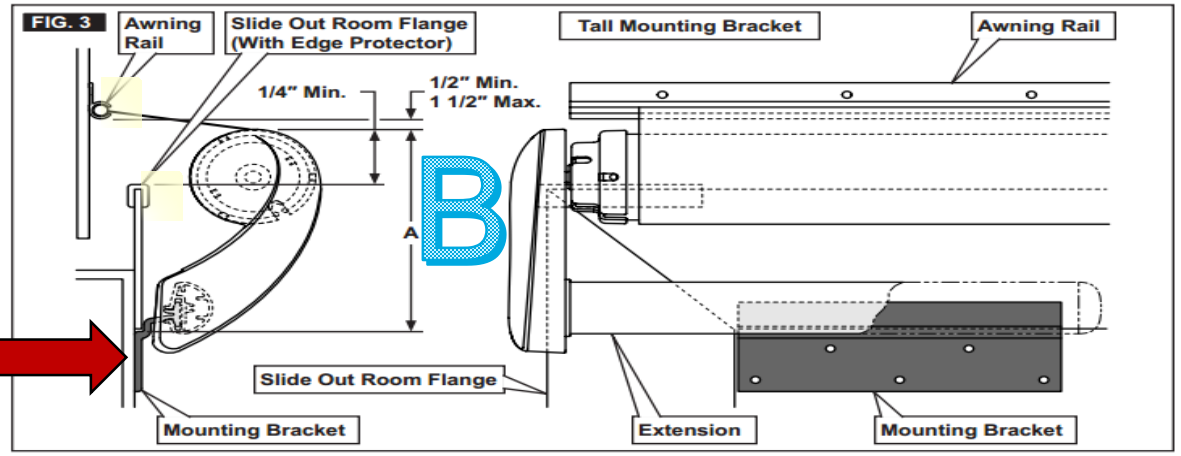

SHORT

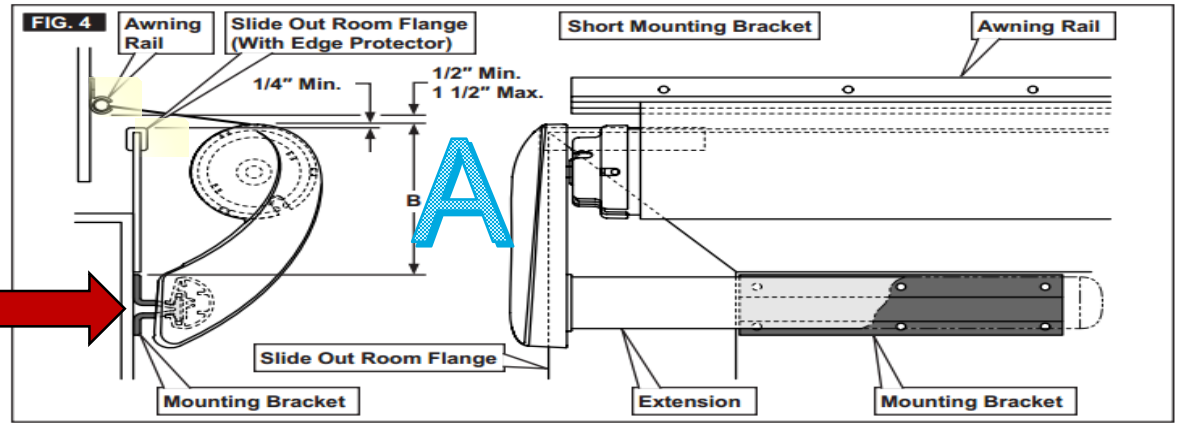

HEX-SHAPE HARDWARE INSTALL WITH 45° (SHORT) BRACKET

The angle of the mounting bracket on OLD HEX HARDWARE is either 45°(Tall) or 90°(Short)

45° provides a bit more clearance than the 90% mounting bracket

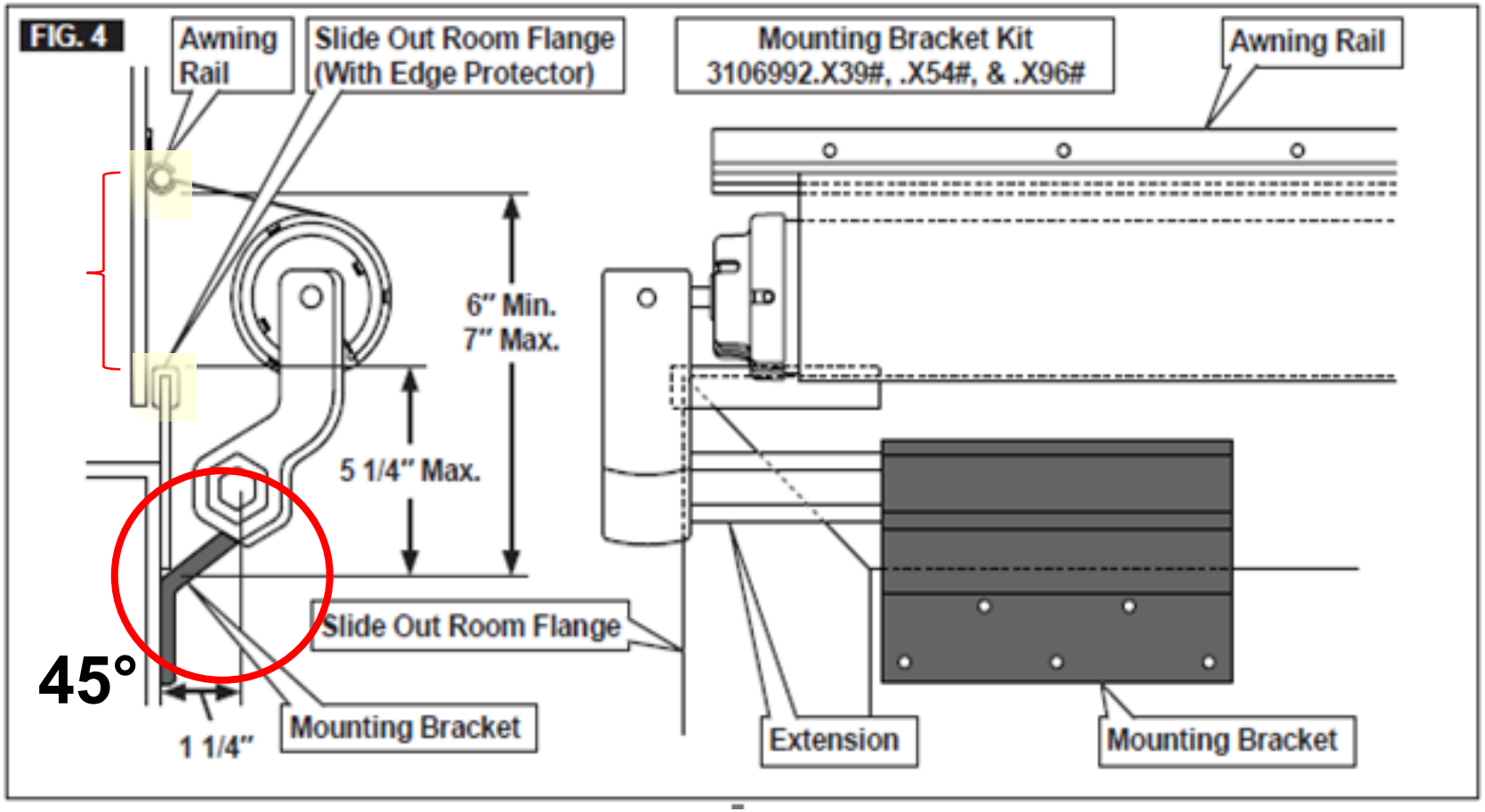

HEX-SHAPE HARDWARE INSTALL WITH 90° (TALL) BRACKET

The angle of the mounting bracket on OLD HEX HARDWARE is either 45°(Tall) or 90°(Short)

45° provides a bit more clearance than the 90% mounting bracket

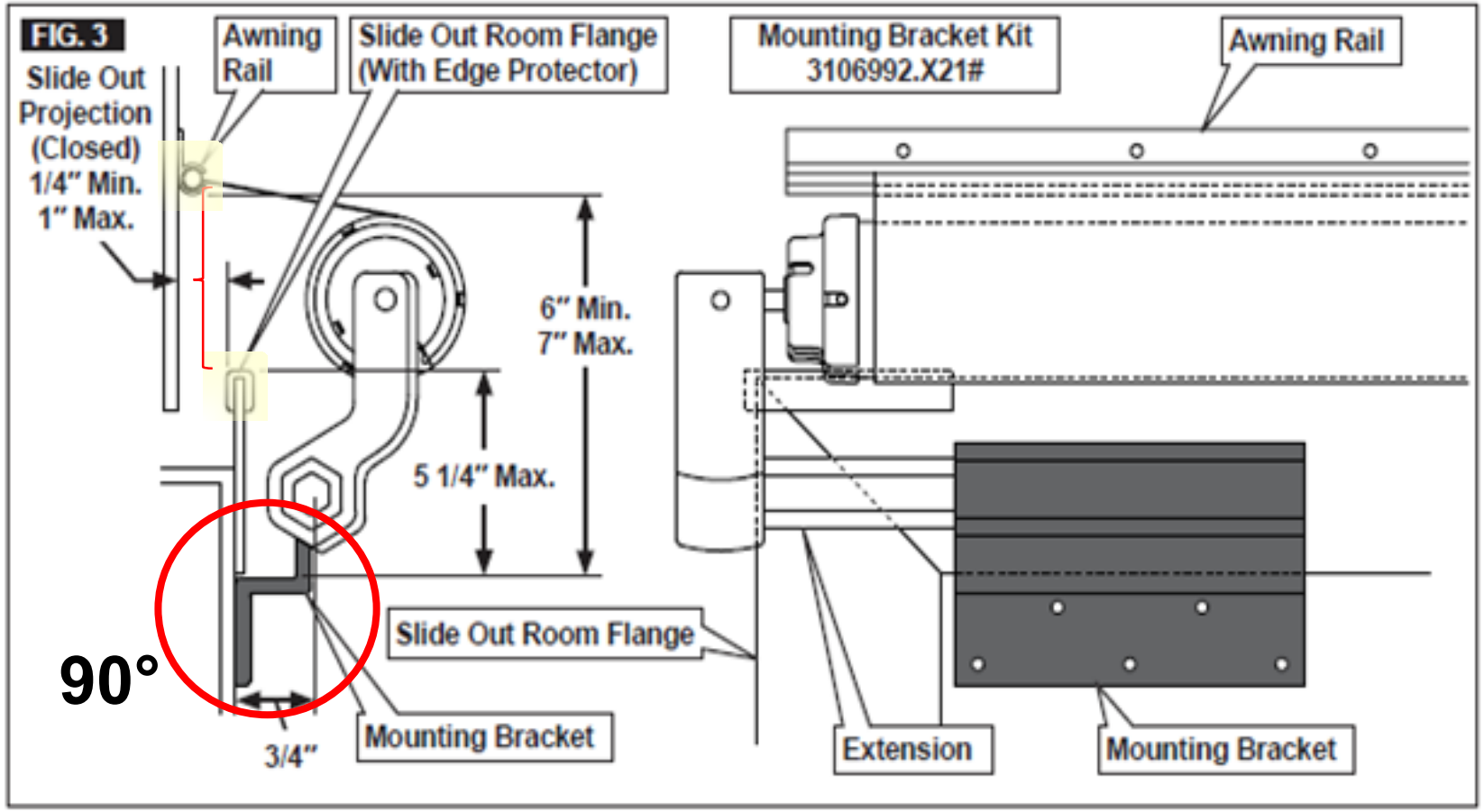

SLIDETOPPER REPLACEMENT PARTS & FABRIC

All parts interchangeable & work on old or new SlideToppers e.g. Anti-Billow Kits, Cradle Kits, Spacer Kits, Replacement Fabrics, Roller Tubes

PARTS

- **Anti Billow Kit 3312418.000(X)**
  Prevents SlideTopper from unraveling while in motion – one standard, two recommended for lengths 16-21'

- **Cradle Kit 3309526.006(X) Deluxe Series, 3309526.054(X) Elite Series**
  Support for long SlideToppers – one for lengths 16-21', two if longer than 21'

- **Spacer Kits 3107940.003 3310066.000**
  Provides additional clearance to prevent fabric from dragging or catching on the top of slide out flange
  This clearance issue was most prevalent when we switched from the old Hex-Shape to new C-Shape End Cap
  Die cast metal (molded) and offers a ½" standoff, can stack two for 1" standoff (buy longer screws)
  Works with new and old SlideTopper brackets 3310066.000U
  Old Bracket is extruded 3107940.003

Anti Billow Kit

Cradle Kit

Spacer Kit

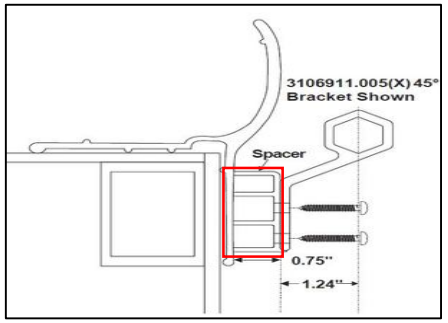

FABRIC

- **Universal SlideTopper Vinyl Replacement Fabric – Black or White**
  50 ft. long roll x 47.5" (roughly 4') wide Black T3106802FJ.600
  50 ft. long roll x 47.5" (roughly 4') wide White T3106802CQ.600
  Bulk pack 6 rolls x 192" (16') wide, has to ship LTL D3106802(XX).999 XX = FJ (Black) CQ (White)

COMPETITIVE PRODUCT COMPARISON – 13’ SLIDETOPPERS

Manufacturer	Dometic	Lippert (LCI)	Carefree
Product Description	Deluxe 156" (13') SlideTopper	Solera 13' Slider	156" (13') Ascend Std SlideTopper
Product Info / Color	Vinyl Weathershield	w/Awning Rail 83217d	Black
FRTA Model Number:	98000FJ.156U	V000165061	KB15462JV42
Shipping Label Information (FRTA) line 1	SLD TOP DLX BLACK 156"	SLIDETOP-156"BK-W HRDWRE-	ASCENT CVR,154"BLCK PBL 42"
Shipping Label Information (FRTA) line 2	-	BK RAIL	-
Date of Manufacture (FRTA)	2/28/2019	8/10/2018	LOT# 00143592
Quantity Received (FRTA)	3	3	3
Hardware Model Number:	9800015.401U	included with the above	KY5562-A
Shipping Label Information (Hardware) line 1	BRACKET KIT,TOPPER TALL BLACK	included with the above	KIT,MTG BRKT,AFT ASCENT,BLK/3
Shipping Label Information (Hardware) line 2	-	included with the above	
Date of Manufacture (Hardware)	2/27/2019	included with the above	LOT# (blank)
Quantity Received (Hardware)	3	included with the above	3
Dimensions:			
Roller tube wall thickness	0.066"	0.071"	0.055"
Roller tube weight	9.756lb	8.32lb	7.383lb
Roller tube length	153.1875	153.25	159.6875
Number of ribs between rope channels	No Ribs	No Ribs	No Ribs
LED Channel	N/A	N/A	N/A
LED Light	N/A	N/A	N/A
Shipping Tube ID			
Shipping Tube wall thickness			
Fabric finished dimension width	151.0625	150.6875	158.5625
Fabric finished dimension projection	47.375	47.0625	47.6875
Awning centerline to centerline (Length)	155.625	156.8125	162.75
Fabric secured at tube (method)	Welded Polyrope	Sewn Polyrope	Welded Polyrope w/ Screw
Fabric weight - Full assembly	4.724lb	4.4324lb	4.9884
Fabric weight - 1 sq ft	0.095lb/ft	0.090lb/ft	0.095lb/ft
Fabric weight per sq yd (calculated)	0.855lb/yd	0.81lb/yd	0.855lb/yd
Sewing; stitches per inch	N/A	N/A	3.5
Top rope; sewn or welded in place	Welded	Welded	Sewn
Top rope securement	Folded, Welded	Folded, Welded	Folded. Sewn, Stapled
Roller tube rope	Yes	Yes	Yes
Roller tube rope securement	Polyrope Welded into Fabric	Folded, Welded	Folded. Sewn, Screwed
Thread color	N/A	N/A	White
Endcap to roller tube attachment	3 Rivets	3 Seld-drilling Screws	1 Screw/ Pressed

SLIDETOPPER COMPARISON CHART

Product Attribute	Dometic 13’	Lippert 13’ Solera	Carefree 13’
Dual Torsion Springs for maximum fabric tension under dry & wet conditions	Yes (all sizes)	Yes	Yes/No (only designed with ‘1’ under 18’)
Pre-Assembled Hardware	Yes	No	No
Standard 13.5 oz. Vinyl Fabric	Yes	Yes	Yes
Stitch Free, Hot Air Welded Leak-Resistant Seams	Yes (Folded, Welded)	Yes (Folded, Welded)	No (Folded, Sewn & Stapled)
Premium Embossed Texture	Yes	No	No
Fabric Weight Per Square Yard	.855 lbs	.81 lbs.	.855 lbs.
Anti-Billow Device	Yes (standard on all SlideToppers)	Yes (optional)	No
Roller Tube Wall Thickness / Weight	.066” / 9.756 lbs.	.071” / 8.32 lbs.	.055” / 7.383 lbs.
Price (MSRP / Advertised)	$438 / $383	$472 / $402	$475 / $405 Amazon
Extension	42” / 53” Select Models	42”	42”
Lengths	Up to 363” (30’3”)	Up to192” (16’)	Up to 384” (32’)
Warranty	One (1) year parts, labor, freight	One (1) year parts, labor	One (1) year parts, labor, standard freight

DETERMINE FABRIC SIZE

- Measure your slide room according to the picture which would be point A (outside flange) to point B (outside flange) to determine room width.
- Measure from point A to point C to make sure the room extension is no more than 42 inches or the Slidetopper will not work.
- Take your measurement from point A (outside flange) and point B (outside flange) and go to page 42 of the 2019 Dometic catalog and get your recommended SlideTopper.

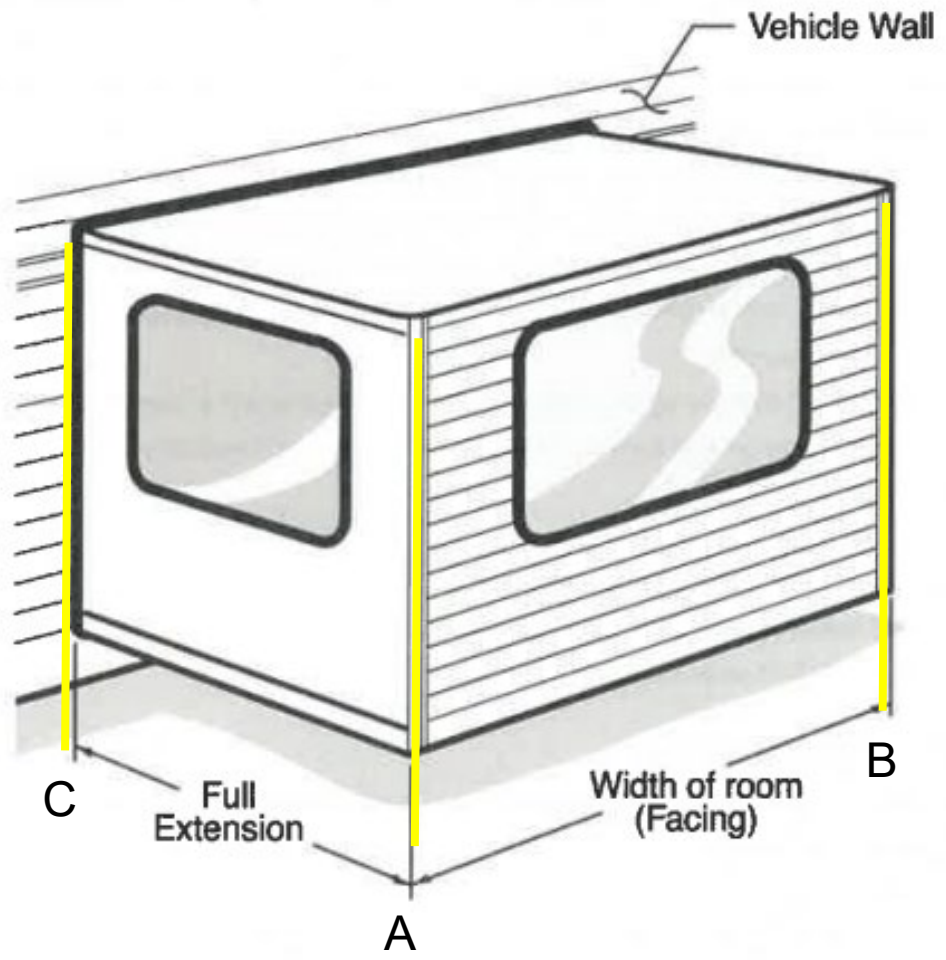

COMMON CUSTOMER SERVICE SLIDETOPPER CALLS

- ***Loose, Wrinkled & Flapping Fabric***
  Quickly SHED THE WATER that pools on top of SlideTopper after a rain by retracting and extending the slide out, this eliminates excessive weight that causes wrinkles & stretching.

- ***Damaged Caused by Fabric Catching on Slide Out Flange***
  Install a SPACER KIT with the HARDWARE BRACKET to add clearance between fabric and top of slide out flange. Knowing when to install these can avoid headaches and costly repairs such as: damaged fabric, bent flange, or wall damage.

- ***Warranty Claims***
  One (1) year parts, labor and freight for manufacturing defects. Awning fabric has a 30 day material & freight damage examination period e.g. bubbles (~delamination) in fabric, thin spots in vinyl where light bleeds through, torsion spring failures. We cover some non-manufacturing defects for initial 30-days e.g. rips, tears, scrapes, pin holes in fabric, hardware scratch or dent in roller tube – but not if customer fault e.g. scratches awning driving by tree. Awnings are meant for shade, not designed to be umbrellas.

WINDOW AWNINGS

Deluxe (Good) or Deluxe Plus (Better) Window Awnings

Companion window awnings add to the beauty of your RV, shade your interior helping it stay cool, and block UV rays that can fade and deteriorate fabrics and other materials inside the RV. Easy to install, use & maintain.

- Vinyl Fabric / Vinyl Weathershield (Deluxe)
  Vinyl Fabric / Metal Weathershield (Deluxe Plus)
- Vinyl fabric available in same colors options as patio awnings
  Durable 13.5 oz. double-sided vinyl, premium embossed texture

Awnings

- 85604 – Standard window height under 30” (Vinyl WeatherShield)
- 85630 – Standard window height under 30” (Metal WeatherShield)
- 85610 – Tall window height over 30” (Vinyl WeatherShield)
- 85620 – Tall window height over 30” (Metal WeatherShield)

Hardware

- 830757.002B - 18” Standard Hardware (White)
- 830757.002U - 18” Standard Hardware (Black)
- 830757.001B - 30” Tall Hardware (White)
- 830757.001U - 30” Tall Hardware (Black)

Warranty

- 1 Year Parts, Labor & Freight
  Awning fabric has 30-day material & freight damage examination period

VINYL LINEN FADE PATIO & WINDOW AWNING FABRICS - 2020

Double-Sided

- White – Color Code CQ
- Black – Color Code FJ
- Sandstone – Color Code NS
- Azure – Color Code NT
- Bark – Color Code NU
- Maroon – Color Code NV
- Onyx – Color Code NR
- Meadow Green – Color Code NW

Single-Sided
(for OEM 803 and OE/AM 848 awnings)

- Onyx – Color Code PI
- Sandstone – Color Code PH

Elite Window Awning (Best)

Companion window awnings add to the beauty of your RV, shade your interior helping it stay cool, block UV rays that can fade and deteriorate fabrics and other materials inside the RV. Easy to install, use & maintain.

- Acrylic Fabric / Metal WeatherShield
- Acrylic fabric available in same color options as patio awnings

Awnings

- 85662 - Standard for window height under 30”
- 85690 - Tall for window height over 30”

Hardware

- 830757.002B - 18” Standard Hardware (White)
- 830757.002U - 18” Standard Hardware (Black)
- 830757.001B - 30” Tall Hardware (White)
- 830757.001U - 30” Tall Hardware (Black)

Warranty

- 1 Year Parts, Labor & Freight
  Awning fabric has 30-day material & freight damage examination period

WOVEN ACRYLIC PATIO & DOOR AWNING FABRICS - 2020

Stocked: Solid Color, 1-Piece, Double-Sided

- Cadet Grey – Color Code AT
- Black – Color Code BN
- Linen Tweed – Color Code EE
- Charcoal Tweed – Color Code EU

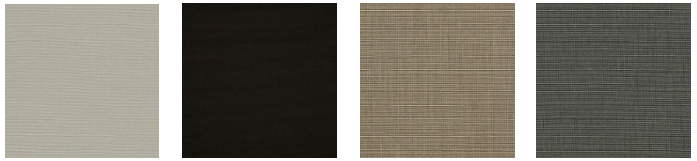

Special Order ($300 upcharge, 3+ weeks): Solid Color, Paneled, Double-Sided

- Forest Green – Color Code BL
- Burgundy – Color Code DA
- Natural – Color Code DD
- Linen – Color Code DM
- Taupe – Color Code DP
- Charcoal Grey – Color Code EK
- Logo Red – Color Code FB
- Marine Blue – Color Code KJ

POWER DOOR AWNINGS

ELITE OASIS II POWER DOOR AWNING – 975 SERIES

Companion door awnings protect your motorhome entryway and passenger side window, add to the beauty of your RV, shade your interior helping it stay cool, block UV rays that can fade fabrics inside the RV, and are easy to install, use & maintain.

Fabric

- Vinyl fabric available in Black ‘FJ’ and White ‘CQ’
  Durable 13.5 oz. double-sided vinyl, premium embossed texture
- Acrylic fabric available in same color choices as patio awnings

Hardware

- Black or Polar White

Sizes

- Available in widths of 48” or 56”
- Canopy is 43 ½” wide
- Canopy extends 34”

Warranty

- 1 Year Parts, Labor & Freight
  Awning fabric has 30-day material
  & freight damage examination period

VINYL LINEN FADE PATIO & DOOR AWNING FABRICS - 2020

Double-Sided

- White – Color Code CQ
- Black – Color Code FJ
- Sandstone – Color Code NS
- Azure – Color Code NT
- Bark – Color Code NU
- Maroon – Color Code NV
- Onyx – Color Code NR
- Meadow Green – Color Code NW

Single-Sided
(for OEM 803 and OE/AM 848 awnings)

- Onyx – Color Code PI
- Sandstone – Color Code PH

WOVEN ACRYLIC PATIO & DOOR AWNING FABRICS - 2020

Stocked: Solid Color, 1-Piece, Double-Sided

- Cadet Grey – Color Code AT
- Black – Color Code BN
- Linen Tweed – Color Code EE
- Charcoal Tweed – Color Code EU

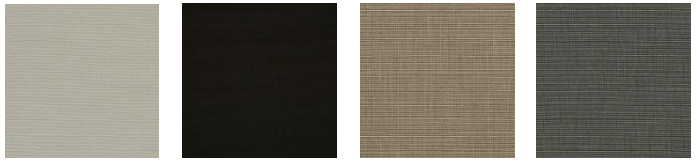

Special Order ($300 upcharge, 3+ weeks): Solid Color, Paneled, Double-Sided

- Forest Green – Color Code BL
- Burgundy – Color Code DA
- Natural – Color Code DD
- Linen – Color Code DM
- Taupe – Color Code DP
- Charcoal Grey – Color Code EK
- Logo Red – Color Code FB
- Marine Blue – Color Code KJ

RESOURCES

DOMETIC BUSINESS CUSTOMERS

www.dometic.com/d4b and navigate to RESOURCES > RV RESOUCE CENTER

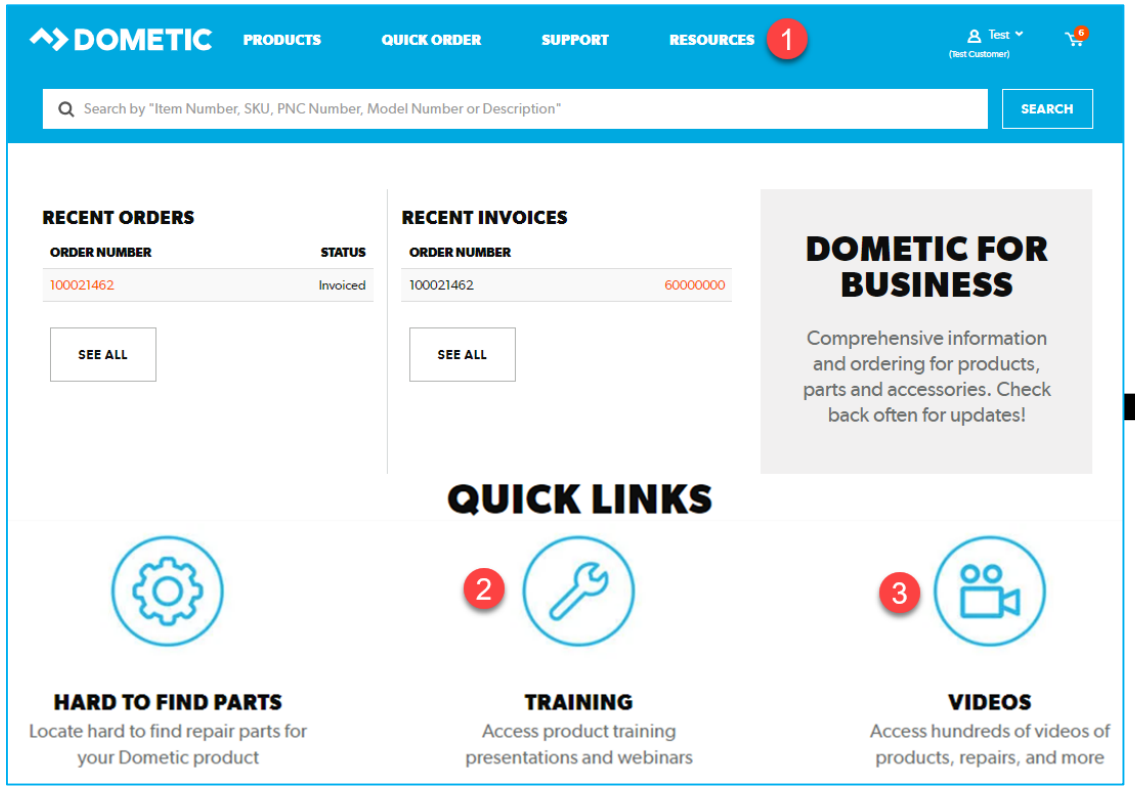

Product Literature, Training Decks

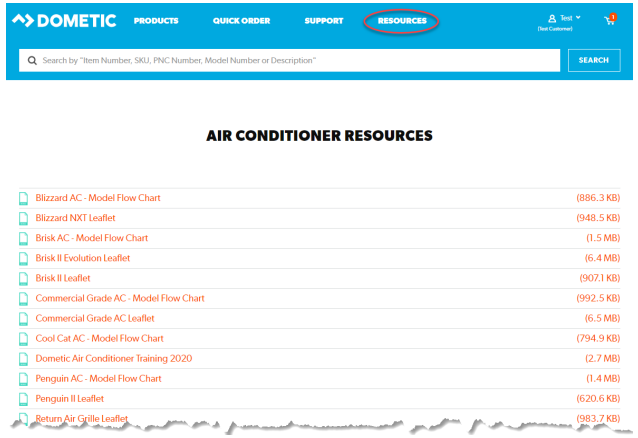

Repair & Product Videos

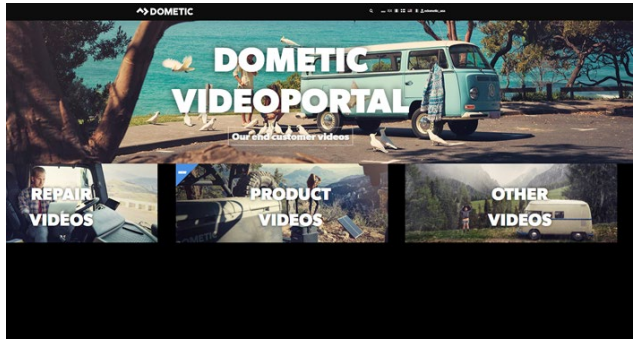

Past Training Sessions

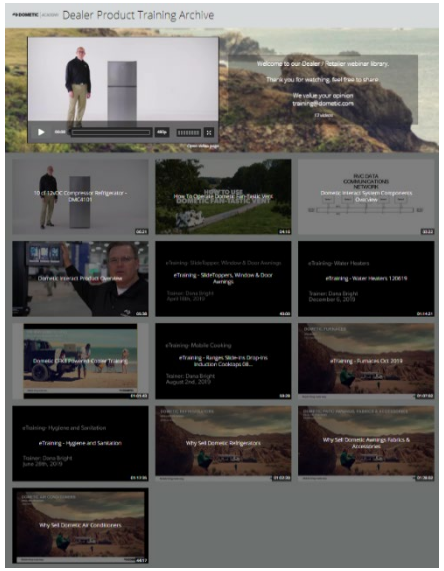

MANUALS

DOMETIC

AWNINGS
SLIDE TOPPER™

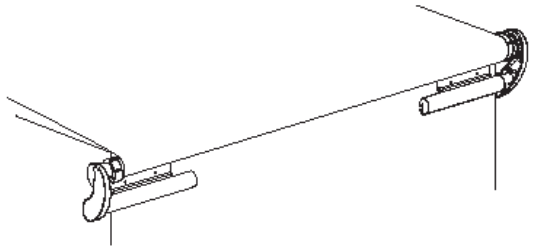

Hardware: 98000(LL).40(Y)(#)
Fabric Roller Tube Assembly: 98(X)0(Z)(YY).(LLL)(#)

EN **Slide Topper**
Installation and Operation Manual 2

REVISION D Form No. 3314719.000 04/19 | ©2019 Dometic Corporation

Click To Open

DOMETIC

AWNINGS
SLIDE TOPPER™

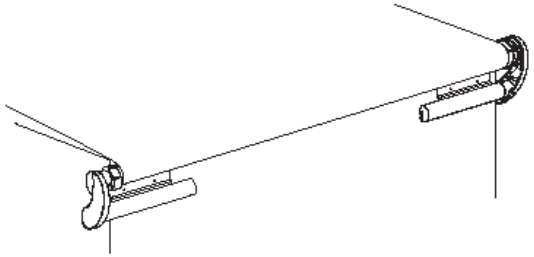

Hardware: 98000(LL).40(Y)(#)
Fabric Roller Tube Assembly: 98(X)0(Z)(YY).(LLL)(#)

EN **Slide Topper**
Application Guide

This application guide is intended to aid in the selection of the proper awning size, brackets, and hardware for the Slide Topper installation only. It is not intended to provide all information and warnings related to the product. Refer to your operating and instruction manual for additional important information and safety warnings.

Model Identification

Hardware

98000LL . 40Y #

- Hardware Color
- 1 = Tall, 2 = Short
- Extension (15, 18)

Fabric Roller Tube Assembly (FRTA)

98X 0Z YY . LLL #

- Color
- Length
- Fabric Color
- 0 = No Rail Included, 1 = Rail Included
- Number of Slats

REVISION C Form No. 3315517.000 04/19 | ©2019 Dometic Corporation

Click To Open

QUESTIONS

DOMETIC SUPPORT

www.dometic.com www.dometic.com/d4b

Technical Service and Warranty Return Authorization

Dometic brands (US): (800) 216-5115 or (888) 867-4188 Email: techservice@dometic.com

Dometic brands (Canada): (800) 576-6546

Atwood brands (866) 869-3118

Sealand brands (800) 321-9886

Environmental brands: (800) 542-2477 (Florida)

Claim Payment Information

Dometic/Atwood brands (888) 867-4188 Option 7

Sealand brand (800) 321-9886

Warranty: claimpayments@dometic.com

Freight Claim: freightclaims@dometic.com

Mobile living made easy.

DOMETIC