DOMETIC

REFRIGERATION REFRIGERATORS

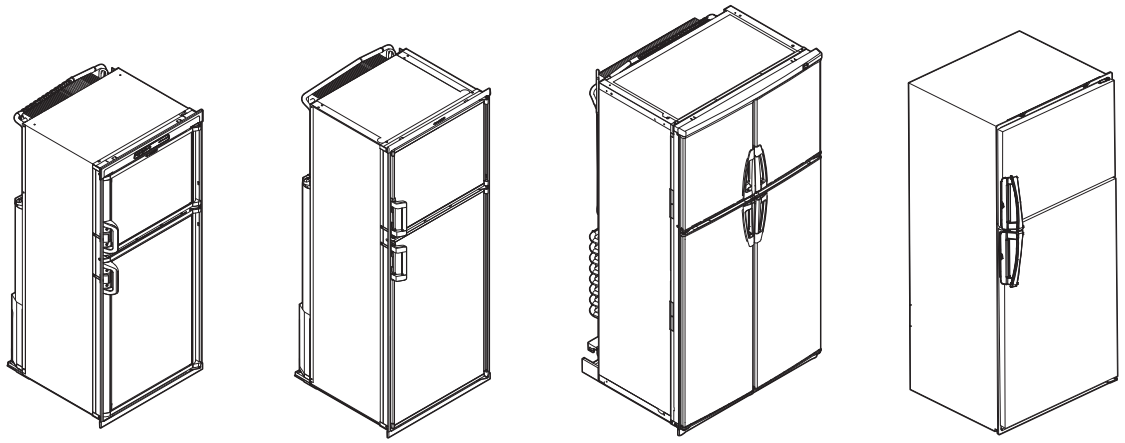

DM2652, DM2662, DM2663, DM2672, DM2682, DM2683, DM2852, DM2862, DM2872, DM2882, DMR702 (first gen), DMR702-C, DMR702-D, DMR702-E, RM1350, RM2351, RM2354, RM2451, RM2454, RM2551, RM2554, RM3762, RM3962

EN

Americana and New Generation Refrigerators

Service Manual. 2

WARNING: If the information in this manual is not followed exactly, a fire or explosion may result, causing property damage, personal injury, or death.

- **Do not store or use gasoline or other flammable vapors and liquids in the vicinity of this or any other appliance.**
- **WHAT TO DO IF YOU SMELL GAS**
  - **Do not try to light any appliance.**
  - **Do not touch any electrical switch.**
  - **Do not use any phone in your recreational vehicle.**
  - **Clear the recreational vehicle of all occupants.**
  - **Turn off the gas supply tank valve(s) or main gas supply.**
  - **Immediately call your gas supplier for instructions.**
  - **If you cannot reach your gas supplier, call the fire department.**
- **Have the gas system checked and leakage source corrected by a qualified installer, service agency, manufacturer or dealer, or the gas supplier.**

⚠ WARNING

Cancer and Reproductive Harm
www.P65Warnings.ca.gov

Revision A Form No. 3317426.000 07/22 | ©2022 Dometic Corporation

Service Center & Dealer Locations
Visit: www.dometic.com

Please read these instructions carefully and follow all instructions, guidelines, and warnings included in this product manual in order to ensure that you install, use, and maintain the product properly at all times. These instructions MUST stay with this product.

By using the product, you hereby confirm that you have read all instructions, guidelines, and warnings carefully and that you understand and agree to abide by the terms and conditions as set forth herein. You agree to use this product only for the intended purpose and application and in accordance with the instructions, guidelines, and warnings as set forth in this product manual as well as in accordance with all applicable laws and regulations. A failure to read and follow the instructions and warnings set forth herein may result in an injury to yourself and others, damage to your product, or damage to other property in the vicinity. This product manual, including the instructions, guidelines, and warnings, and related documentation, may be subject to changes and updates. For up-to-date product information, please visit www.dometic.com.

Contents

1 Explanation of Symbols and Safety Instructions 3
1.1 Recognize Safety Information 3
1.2 Understand Signal Words 3
1.3 Supplemental Directives 3
1.4 General Safety Messages 4
2 Intended Use 5
3 Troubleshooting 5
4 General Information 9
4.1 Tools and Materials 9
4.2 Model Identification 9
4.3 Component Locations 12
4.4 Terminology 14
5 Wiring Diagrams 15
6 Diagnostic Procedures 16
6.1 Error-Based Diagnostics 25
7 Installation Issues 28
7.1 Power Issues 29
7.2 Gas Pressure Issues 29
7.3 Installation Issues 29
7.4 Ambient Temperature Issues 30
7.5 Humidity Issues 30
7.6 Altitude Issues 30
7.7 RF Interference Issues 30
8 Service Procedures 30
8.1 Removing the Refrigerator from an Enclosure 31
8.2 Performing a Gas Leak Test 31
8.3 Replacing the Burner Assembly 31
8.4 Testing the Climate Control Heater for Resistance 32
8.5 Testing the Cooling Unit in Bypass Mode . . 32
8.6 Replacing the Cooling Unit 32
8.7 Testing the Communication Wire Harness for Continuity 33
8.8 Replacing the Communication Harness 33
8.9 Testing a Lower Control Module Fuse for Continuity 34
8.10 Replacing the Lower Control Module 34
8.11 Replacing the Door 35
8.12 Testing the Door Gasket 35
8.13 Repairing the Door Gasket 36
8.14 Adjusting the Door Flapper (RM1350 Model Only) 36
8.15 Replacing the Door Hinge 37
8.16 Adjusting the Position of the Electrode 37
8.17 Replacing the Electrode 38
8.18 Replacing the Flue Baffle 38
8.19 Testing the Gas Valve for Resistance 39
8.20 Replacing the Gas Valve 39
8.21 Testing the Heating Element for Resistance . 40
8.22 Replacing the Heating Element 40
8.23 Bypassing the Ice Maker 41
8.24 Replacing the Ice Maker 41
8.25 Testing the Interior Light Switch for Continuity 42
8.26 Replacing the Interior Light 42

8.27 Replacing the Orifice 43
8.28 Replacing the Re-igniter 43
8.29 Testing the Relay for Continuity (RM1350 Model Only). 44
8.30 Replacing the Relay (RM1350 Model Only) . 44
8.31 Testing the Thermal Fuse for Continuity 45
8.32 Replacing the Thermal Fuse 45
8.33 Testing the Thermistor for Resistance 46
8.34 Testing the Thermistor for Continuity 46
8.35 Replacing the Thermistor 46
8.36 Replacing the Thermocouple 47
8.37 Testing the Thermo Fuse for Continuity (Americana Models Only) 47
8.38 Replacing the Thermo Fuse (Americana Models Only). 48
8.39 Testing the Thermofuse for Continuity (New Generation Models Only) 48
8.40 Replacing the Thermofuse (New Generation Models Only). 49
8.41 Replacing the Upper Control Module 49
8.42 Replacing the Upper Control Module Circuit Board (DM2652, 2852 only) 50
8.43 Replacing the Ventilator Fan 51
8.44 Replacing the Ventilator Fan Switch 51
8.45 Testing the Water Valve for Resistance 52
8.46 Replacing the Water Valve. 52
9 Disposal 53
10 Replacement Parts 53

1 Explanation of Symbols and Safety Instructions

This manual has safety information and instructions to help you eliminate or reduce the risk of accidents and injuries.

1.1 Recognize Safety Information

This is the safety alert symbol. It is used to alert you to potential physical injury hazards. Obey all safety messages that follow this symbol to avoid possible injury or death.

1.2 Understand Signal Words

A signal word will identify safety messages and property damage messages, and also will indicate the degree or level of hazard seriousness.

DANGER!
Indicates a hazardous situation that, if **not** avoided, will result in death or serious injury.

WARNING
Indicates a hazardous situation that, if **not** avoided, could result in death or serious injury.

CAUTION
Indicates a hazardous situation that, if **not** avoided, could result in minor or moderate injury.

NOTICE: Used to address practices **not** related to physical injury.

Indicates additional information that is **not** related to physical injury.

1.3 Supplemental Directives

To reduce the risk of accidents and injuries, please observe the following directives before proceeding to service or maintain this appliance:

- Read and follow all safety information and instructions.
- Read and understand these instructions before service or maintenance of this product. For additional information on replacement service, refer to the appropriate installation manual.
- When servicing the appliance, replacement parts and installations must comply with all applicable local or national codes, including the latest edition of the following standards:

U.S.A.

- ANSI/NFPA70, National Electrical Code (NEC)
- ANSI/NFPA 1192, Recreational Vehicles Code
- ANSI Z21.19, Absorption, Recreational Vehicles Code

Canada

- CSA C22.1, Parts I & II, Canadian Electrical Code
- CSA Z240 RV Series, Recreational Vehicles

1.4 General Safety Messages

DANGER! CARBON MONOXIDE POISONING HAZARD.

This product can produce carbon monoxide, which has no odor and can be life-threatening. Avoid improper adjustment, alterations, service, or maintenance. Follow instructions for the proper installation of this appliance. Failure to obey this danger notification can result in improper installation causing carbon monoxide poisoning that will result in death or serious injury.

WARNING: ELECTRICAL SHOCK, FIRE, AND/ OR EXPLOSION HAZARD. Failure to obey the following warnings could result in death or serious injury:

- Disconnect all power before working within any electrical enclosure or before handling any electrical connections.
- If powered diagnostics are necessary to troubleshoot the appliance, a trained and certified service technician is required. Service and maintenance must be done by a qualified service person only.
- Use only Dometic replacement parts and components that are specifically approved for use with the appliance.
- Do **not** modify this product in any way. Modification can be extremely hazardous.
- Do **not** allow anyone (including children) with reduced physical, sensory, or mental capabilities, or lack of experience and knowledge, to use this product unless they have been given supervision or instruction (concerning the use of this product) by a person responsible for their safety. Do **not** allow children to play with the product or with the fixed controls (if applicable).
- This product is equipped with a three-prong (grounding) plug for protection against shock hazards. This product should be plugged directly into a three-prong receptacle that provides grounding in compliance with all applicable electrical codes. Do **not** cut or remove the grounding prong from the plug.
- Before refueling or parking near a gasoline pump, make sure that all LP gas appliances are shut off.
- Do **not** store or use gasoline, oil- or gasoline-soaked rags, or flammable liquids in the service area behind the refrigerator or in the vicinity of this or any other gas appliance.

WARNING: PRESSURE HAZARD.

Do **not** place carbonated liquids, glass containers, or sealed bottles in the freezer. Liquids expand when frozen and could cause the container to explode. Failure to obey this warning could result in death or serious injury.

WARNING: LIFTING HAZARD.

Use proper lifting techniques and control when lifting the product. Failure to obey this warning could result in death or serious injury.

WARNING: ABSORPTION-COOLING SYSTEMS: FIRE, BURN, OR INHALATION HAZARD.

Do **not** fracture or puncture the cooling unit. The cooling unit is under pressure and contains ammonia, sodium chromate, and other chemicals. Repeated or prolonged exposure to sodium chromate could cause organ damage or cancer. Exposure to high concentrations of ammonia refrigerant could cause pulmonary edema (fluid in the lungs); chemical burns to the eyes, lungs, and skin; and could cause a fire (when exposed to open flame). If the refrigerator stops working and/or emits an ammonia smell, immediately turn the refrigerator off (if it is safe to do so), leave the vicinity, and contact a qualified Service Center. Failure to obey this warning could result in death or serious injury.

CAUTION: BURN, FROSTBITE , OR FROSTNIP HAZARD. Failure to obey the following cautions could result in minor or moderate injury:

- Do **not** touch cold surfaces (or stored items) in the freezer compartment with damp or wet skin. Skin could stick to the cold surfaces and freeze.

- The cooling unit piping may be hot. Allow time for the piping to cool before touching.

2 Intended Use

This service manual is intended for use by OEM service center and dealer technicians. It is not intended for use by RV owners, or those unfamiliar with the workings of refrigerators used in the RV industry.

Readers of this manual are assumed to have a basic understanding of RV refrigerator best practices and experience in the proper use of the tools and materials related to the installation, operation, maintenance, and service of the refrigerator equipment used in the RV industry.

The refrigerator service manual is a resource created to help service technicians identify the refrigerator product by serial number, diagnose an operational issue, and efficiently and effectively process warranty claims.

For applicable installation instructions, authorized service center information, or specific warranty information, visit www.dometic.com.

For applicable exploded parts views or service kit information, visit www.dometic.com/en-us/us/for-business.

3 Troubleshooting

This section has tables showing the main causes for refrigerator issues.

Review the "Troubleshooting Table" on page 5 to help you identify the suspected operational issue, the potential causes, and the diagnostic procedure associated with those issues.

Refer to the "Diagnostics Table" on page 9 for links to specific refrigerator components that show diagnostic tasks to help you confirm the suspected operational issue and potential cause.

Remember to check the basics, including contributing issues, before replacing any parts. Refer to "Installation Issues" on page 28 for more details.

Troubleshooting Table

Operational Issue	Potential Reason	Page
The refrigerator is not operating and the interior light not on.	The mode or a switch is set incorrectly.	24
	The DC voltage is too low or absent.	28
	The thermal fuse is blown.	22
	The thermo fuse is blown.	23
	The wiring is faulty, has shorted, or is miswired.	15
	The upper control module is defective.	24
	There is a short or a failed circuit in the lower control module.	21
The refrigerator is not operating but the interior light is on.	The mode or a switch is set incorrectly.	24
	The DC voltage is too low or absent.	28
	The thermistor is not operating within the proper temperature range.	23
	The communication wire harness has lost continuity or is shorted to ground.	16
	There is a short or a failed circuit in the lower control module.	21
	The lower control module is not reading the thermistor properly.	
The panel lights do not turn on.	The DC voltage is too low or absent.	28
	The upper control module is defective.	24
	The communication wire harness has lost continuity or is shorted to ground.	16

Operational Issue	Potential Reason	Page
The refrigerator operates in electric mode but not in gas mode.	The mode or a switch is set incorrectly.	24
	The gas pressure is too low or absent.	28
	The knob on the gas valve has been turned to the off or closed position.	19
	The altitude is affecting the operation of the refrigerator in gas mode.	30
	The re-igniter is not creating a spark.	18
	The electrode is not functioning properly.	
	The resistance on the gas valve solenoid is out of specification.	19
	The orifice is blocked or incorrectly sized.	22
	Older Americana models only: the thermocouple is defective.	23
	The burner is blocked.	16
	The wiring is faulty, has shorted, or is miswired.	15
	There is a short or a failed circuit in the lower control module.	21
	The lower control module is not reading the thermistor properly.	
The refrigerator operates in gas mode but not in electric mode.	The mode or a switch is set incorrectly.	24
	The AC voltage is too low or absent.	28
	The heating element is defective.	19
	The wiring is faulty, has shorted, or is miswired.	15
	The 5A 120VAC fuse on the lower control module is blown.	21
	There is a short or a failed circuit in the lower control module.	
	The lower control module is not reading the thermistor properly.	
The refrigerator operates in gas mode but does not cool properly.	The flue baffle is out of place or damaged.	19
The refrigerator or freezer does not get cold enough in any operating mode.	Improper installation caused an imbalance in the airflow around the refrigerator.	28
	The fan switch is defective.	24
	The refrigerator level is not within tolerance.	28
	The ambient temperature is preventing the proper function of the refrigerator.	
	The door is warped.	18
	The door gasket is cracked, warped, or has a gap.	
	RM1350 model only: the relay is defective.	22
	RM1350 model only: the flapper guide needs adjustment.	17
	The thermistor is not operating within the proper temperature range.	23
	There is a short or a failed circuit in the lower control module.	21
	The lower control module is not reading the thermistor properly.	
	The cooling unit is defective.	17
The ice maker is not producing ice.	The freezer is not at the required temperature.	20
	The ice maker is defective.	
	The AC voltage is too low or absent.	28
	RM1350 model only: the relay is defective.	22
	The water valve is defective.	25

Operational Issue	Potential Reason	Page
The ice maker is over-filling or under-filling during operation.	The ice maker water supply needs adjustment.	20
The fresh food compartment freezes.	The thermistor is not operating within the proper temperature range.	23
	There is a short or a failed circuit in the lower control module.	21
	The lower control module is not reading the thermistor properly.	
The refrigerator rapidly builds up frost.	The door has been open too often or for too long.	18
	Food was placed in the refrigerator while it was still warm.	N/A
	The door is warped.	18
	The door hinge is warped.	
	The door gasket is cracked, warped, or has a gap.	
	High humidity in the environment is causing frost buildup.	30
Condensation forms in the fresh food compartment or around the door frame.	The door is warped.	18
	The door hinge is warped.	
	The door gasket is cracked, warped, or has a gap.	
	RM1350 model only: the flapper guide needs adjustment.	17
	High humidity in the environment is causing condensation.	30
	The climate control heater is defective.	16
There is a strong smell of ammonia.	The cooling unit is defective.	17
There is a loud gurgling noise coming from the cooling unit.	The cooling unit is defective.	17
The door does not close properly.	The door is warped.	18
	The door hinge is warped.	
	RM1350 model only: the flapper guide needs adjustment.	17
The interior light remains on when the door is closed.	The light switch is wired incorrectly.	20
	The low ambient switch is on.	
	The light switch needs alignment.	
The interior light is not functioning properly.	The interior light is defective or broken.	20
The check indicator lamp is on. (Americana models only)	The DC voltage is too low.	28
	There is a loose or weak ground.	15
	The re-igniter is not creating a spark.	18
	The gas pressure is too low or absent.	28
	The knob on the gas valve has been turned to the off or closed position.	19
	The resistance on the gas valve solenoid is out of specification.	22
	The orifice is blocked or incorrectly sized.	22
	The burner is blocked.	16
	The thermocouple is defective.	23
	The altitude is affecting the operation of the refrigerator in gas mode.	28
	The electrode is not functioning properly.	18

Operational Issue	Potential Reason	Page
New Generation models only • E0 is displayed. • Three thermostat range setting lights are flashing. (First generation DMR702 and DMR702-D models only)	The DC voltage is too low.	28
	The lower control module cannot handle the AC ripple level.	21
	There is a short or a failed circuit in the lower control module.	21
	There is a loose or weak ground.	15
	The communication wire harness has lost continuity or is shorted to ground.	16
	There is RF interference.	28
	The upper control module is defective.	24
New Generation models only • E1 is displayed. • The left thermostat range setting light is flashing. (First generation DMR702 and DMR702-D models only)	There is a loose or weak ground.	15
	The communication wire harness has lost continuity or is defective.	16
	There is a short or a failed circuit in the lower control module.	21
	There is RF interference.	28
	The upper control module is defective.	24
	The gas pressure is too low or absent.	28
	The knob on the gas valve has been turned to the off or closed position.	19
	The altitude is affecting the operation of the refrigerator in gas mode.	30
	The resistance on the gas valve solenoid is out of specification.	19
New Generation models only • E2 is displayed. • The middle thermostat range setting light is flashing. (First generation DMR702 and DMR702-D models only)	The thermistor has a bad connection.	23
	There is a short in the thermistor wire.	
	The thermistor is not operating within the proper temperature range.	
	The lower control module is not reading the thermistor correctly.	21
New Generation models only • E3 is displayed. • Two thermostat range setting lights are flashing. (First generation DMR702 and DMR702-D models only)	The thermal fuse is tripped.	22
	The thermofuse is defective.	23
	Improper installation caused an imbalance in the airflow around the refrigerator.	28
	The heating element is out of specification or loose.	19
	The heating element is defective.	
	The orifice is blocked.	22
	The burner is blocked.	16
	The cooling unit is defective.	17
	There is a short or a failed circuit in the lower control module.	21
New Generation models only • E4 is displayed. • The right thermostat range setting light is flashing. (First generation DMR702 and DMR702-D models only)	The DC voltage is too low.	28
	There is a short or a failed circuit in the lower control module.	21

Diagnostics Table

Component	Page
Burner Assembly	16
Climate Control Heater	16
Communication Wire Harness	16
Cooling Unit	17
Door Flapper (RM1350 model only)	17
Door Hinge	17
Doors	18
Electrode	18
Flue Baffle	19
Gas Valve	19
Heating Element	19
Ice Maker	20
Interior Light	20
Lower Control Module	21
Orifice	22
Re-Igniter	18
Relay (RM1350 model only)	18
Thermal Fuse	22
Thermistor	23
Thermocouple (Older Americana models only)	23
Thermo Fuse	23
Upper Control Module	24
Ventilator Fan/Switch	24
Water Valve	25

4 General Information

This section provides reference information on the tooling, model identification, components, and terminology associated with the different models.

The images used in this document are for reference purposes only. Components and component locations may vary according to specific product models.

4.1 Tools and Materials

Dometic recommends that the following tools and materials be used while servicing the refrigerators:

Recommended Tools	
Flat-Bladed Screwdriver	Phillips Head Screwdriver
Heat Gun	Razor Knife
Insulated Needle Nose Pliers	Substance Temperature Thermometer
Multimeter - DC/AC Amperage, AC/DC Voltage, Millivolts, Ohms	Wrenches
	U-Tube Manometer

4.2 Model Identification

Each refrigerator is manufactured with a data plate that includes useful information like the model number, product number, manufacturing number and serial number. For most models, the data plate is located inside the refrigerator near the top of the inside cabinet.

This section explains the breakdown of the model identification numbers.

Americana Model Number Breakdown

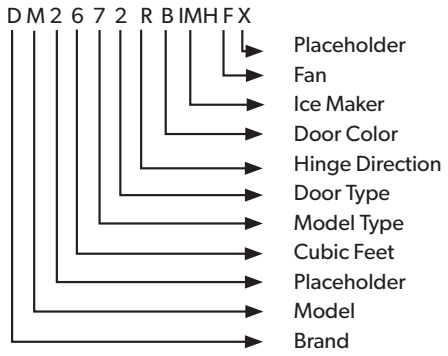

Brand	D = Dometic R = Refrigerator
Model	M = Model
Placeholder	2 = Placeholder
Cubic Feet	# shown = Cubic Feet
Model Type	5 = Americana 6 = Americana Plus 7 = Americana II 8 = Americana II Plus
Door Type	1 = Single Door, Two-Way 2 = Double Door, Two-Way 3 = Double Door, Three-Way 4 = Single Door, Three-Way
Hinge Direction	R = Right Hinge L = Left Hinge
Door Color	B = Black Frame (Accepts Panels) SS = Silver Stainless Steel Door BS = Black Stainless Steel Door
Ice Maker	None = No Ice Maker IMH = Ice Maker with Heater
Fan	None = No Fan F = Pre-installed Fan
Placeholder	X = Placeholder

New Generation Model Number Breakdown

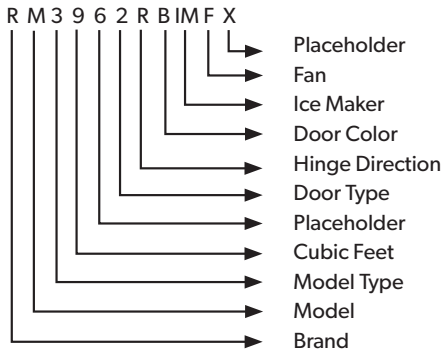

Brand	R = Refrigerator
Model	M = Model
Model Type	3 = New Generation
Cubic Feet	# shown = Cubic Feet
Placeholder	6 = Placeholder
Door Type	2 = Double Door, Two-Way
Hinge Direction	R = Right Hinge L = Left Hinge
Door Color	B = Black Frame (Accepts Panels) SS = Silver Stainless Steel Door BS = Black Stainless Steel Door
Ice Maker	None = No Ice Maker IM = Ice Maker
Fan	None = No Fan F = Pre-installed Fan
Placeholder	X = Placeholder

Renaissance Model Number Breakdown

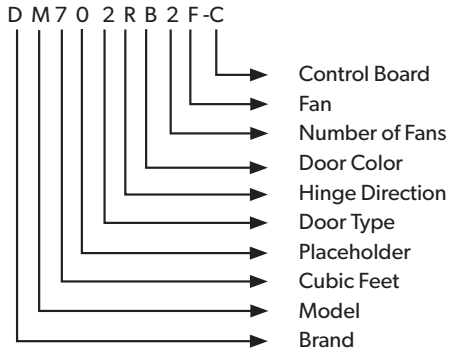

Brand	D = Dometic
Model	M = Model
Cubic Feet	7 = 7 ft^3
Placeholder	0 = Placeholder
Door Type	2 = Two-Way
Hinge Direction	R = Right Hinge L = Left Hinge
Door Color	B = Black Frame (Accepts Panels)
Number of Fans	2 = Two Fans
Fan	None = No Fan F = Pre-installed Fan
Control Board	-C = ZhangBang V1 Control Board -E = ZhangBang V2 Control Board -D = Hydra Control Board None = Original Model, Hydra Control Board

Elite Series Model Number Breakdown

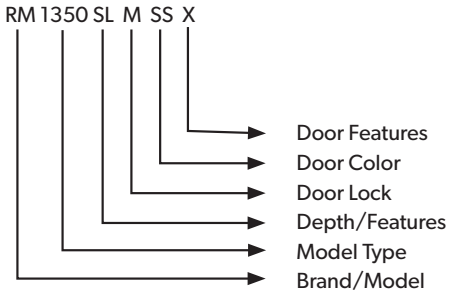

Brand/Model	RM = Refrigerator Model
Model Type	1350 = Elite Series
Depth/Features	SL = Slim (24 in.) IM = Ice Maker WID =Water/Ice Dispenser in the Door M = Manual Door Lock (26 in. Models)
Door Lock	M = Manual Door Lock (Slim Models)
Door Color	SS = Silver Stainless Steel Door BS = Black Stainless Steel Door
Door Features	X = Placeholder

4.3 Component Locations

This section provides the general component locations for each refrigerator model. Actual model component locations may vary.

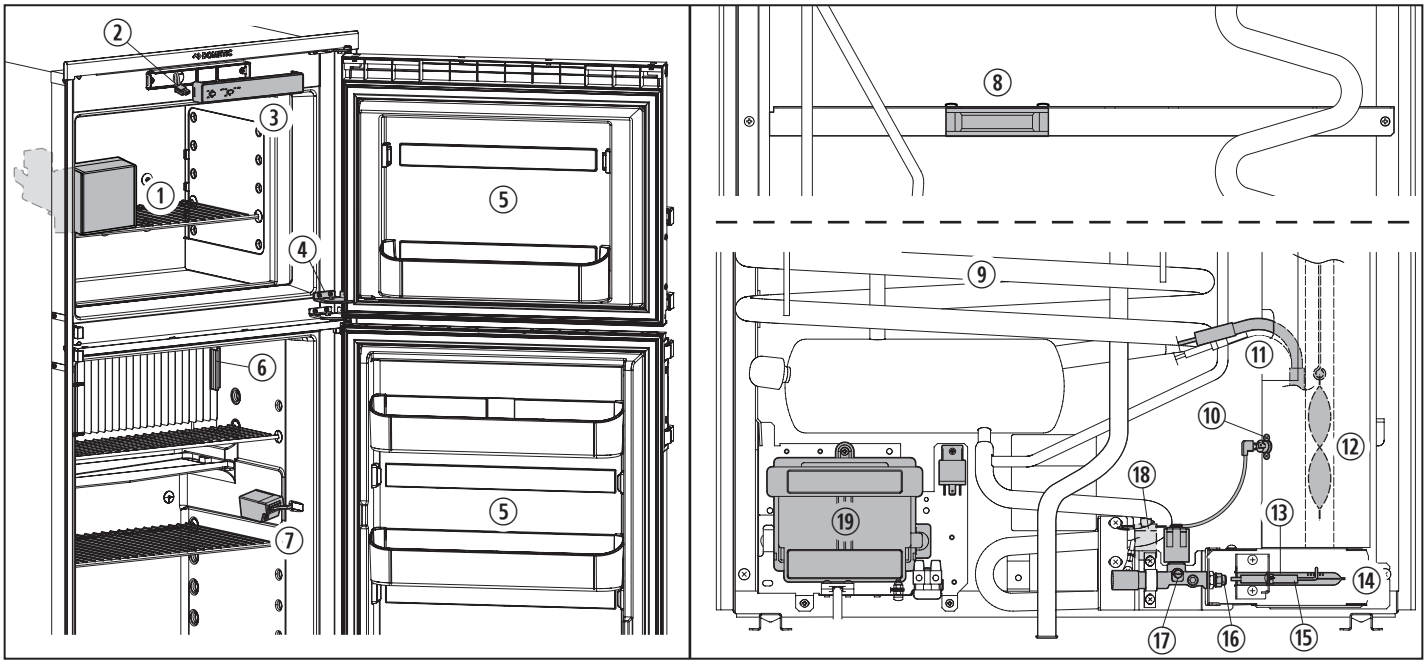

1 Americana Model Component Locations

① Ice Maker
② Communication Wire Harness
③ Upper Control Module
④ Door Hinge
⑤ Doors
⑥ Thermistor
⑦ Interior Light
⑧ Ventilator Fan/Switch
⑨ Cooling Unit
⑩ Thermo Fuse
⑪ Heating Element
⑫ Flue Baffle
⑬ Thermocouple
⑭ Burner Assembly
⑮ Electrode
⑯ Orifice
⑰ Gas Valve
⑱ Thermal Fuse
⑲ Lower Control Module
⑳ Water Valve (not shown)

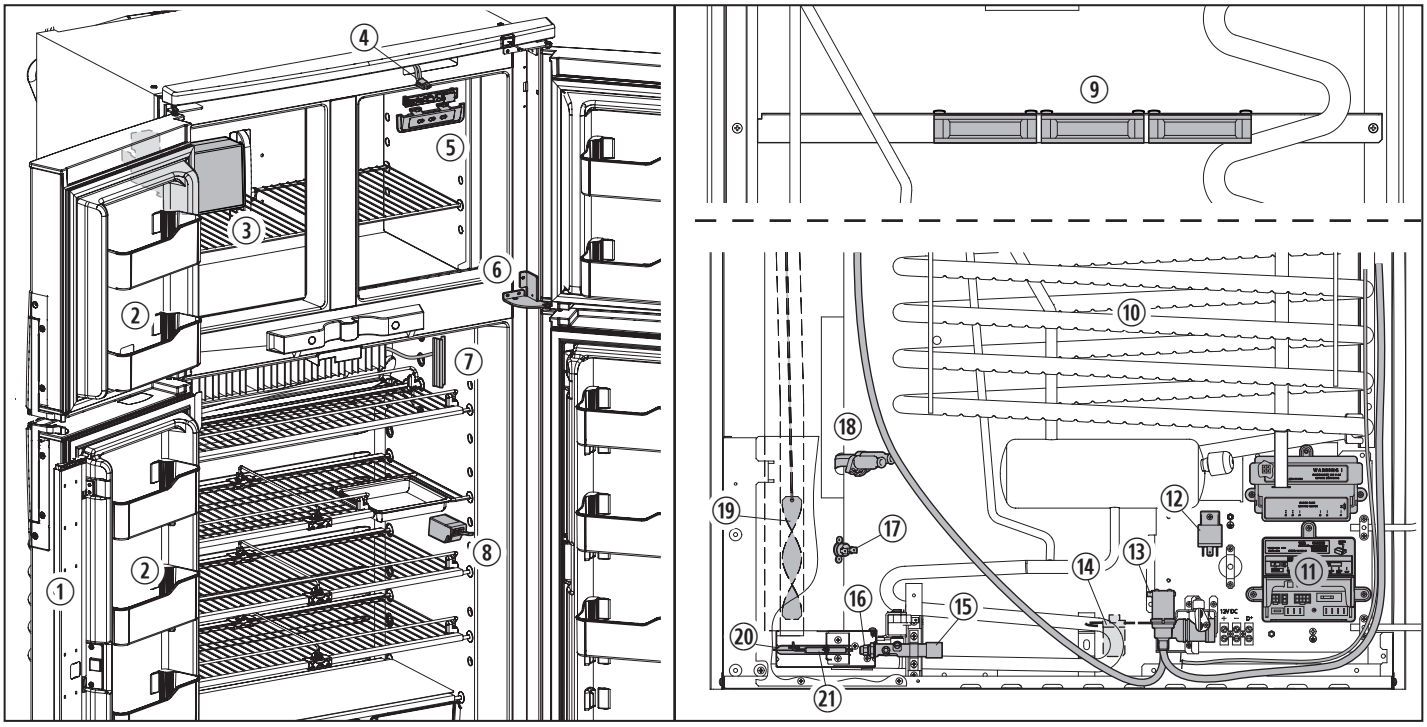

2 New Generation Model Component Locations

① Door Flapper
② Doors
③ Ice Maker
④ Communication Wire Harness
⑤ Upper Control Module
⑥ Door Hinge
⑦ Thermistor
⑧ Interior Light
⑨ Ventilator Fan/Switch
⑩ Cooling Unit
⑪ Lower Control Module
⑫ Relay
⑬ Water Valve
⑭ Thermal Fuse
⑮ Gas Valve
⑯ Orifice
⑰ Thermofuse
⑱ Heating Element
⑲ Flue Baffle
⑳ Burner Assembly
㉑ Electrode

4.4 Terminology

Term	Definition
2-Way	A refrigerator designed to work on either gas or 120 VAC
3-Way	A refrigerator designed to work on either gas, 120 VAC, or 12 VDC
Condenser	The section of the heat exchanger used to cool and condense the incoming refrigerant vapor into a liquid
Condenser Coil	Tubing used in the condenser to release heat energy from the refrigerant and condense the refrigerant vapor into a liquid
Control Module	A power distribution board and function controller
Cooling Unit	A sealed, ammonia-based absorption cooling system
Electrode	Passes a spark from the re-igniter to the burner to ignite the fuel
Flue Baffle	Installed within the flue tube to slow heat rise and spread heat along the flue tube
Flue Tube	A tube welded to the boiler that, when the refrigerator operates in gas mode, conveys heated exhaust gases from the boiler to an external vent
Heating Element	Provides a specific number of BTUs to the boiler when the refrigerator operates in electric mode
Orifice	Provides a pre-determined amount of gas to the burner (does not regulate pressure)
Re-Igniter	A spark generator and flame detection device
Thermal Fuse	A flame detection safety device
Thermistor	A negative temperature coefficient sensor that allows the refrigerator to stay within a narrow range of temperatures and turn its cooling cycle on or off as needed
Thermocouple	Flame detection device in some older models that uses resistance to keep fuel flowing for gas operation
Thermo Fuse	A temperature overheating safety device. The electrode fulfills this function on newer models
Turning Vein	A deflector installed in some applications to assist with air movement at the rear of the refrigerator cooling unit
Ventilator Fan	Fan that circulates air, which helps the condenser unit function properly

5 Wiring Diagrams

This section provides examples of the wiring for each refrigerator model.

The wiring diagrams shown are best representations of each refrigerator. Wire colors may vary.

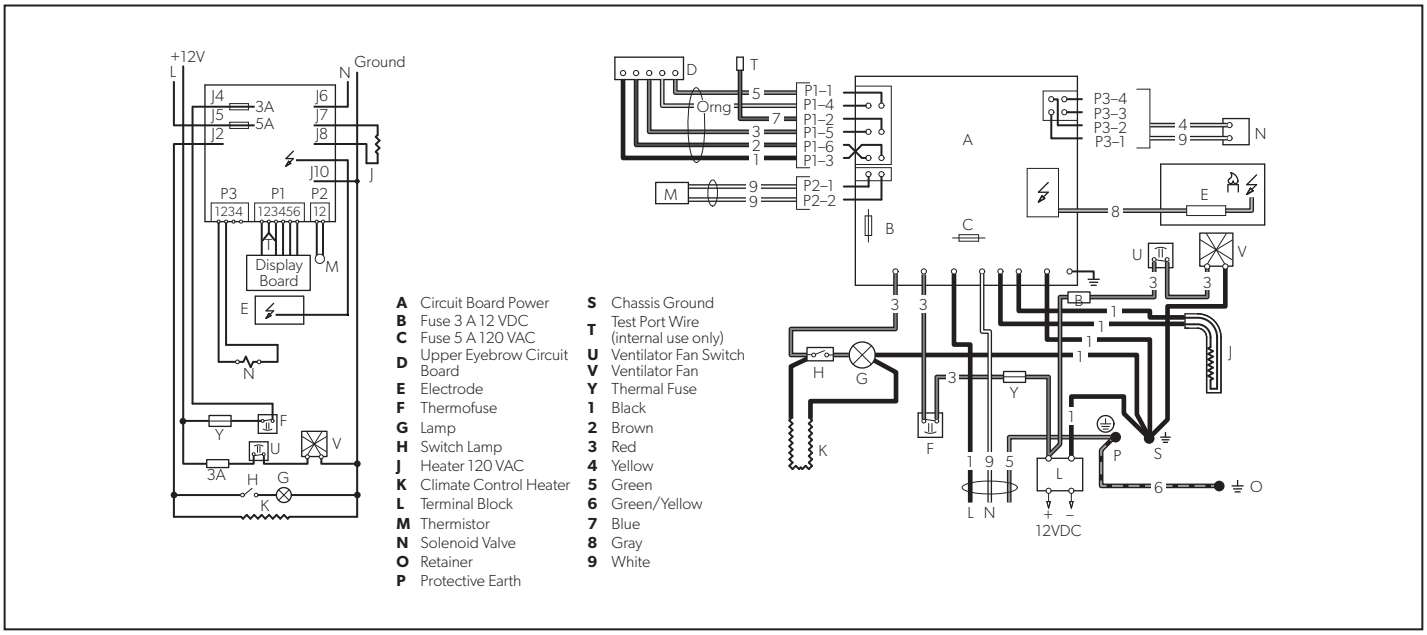

3 DM2672, DM2682, DM2872, DM2882, DM2652, DM2662, DM2852, DM2862 (one fan) with and without ice maker

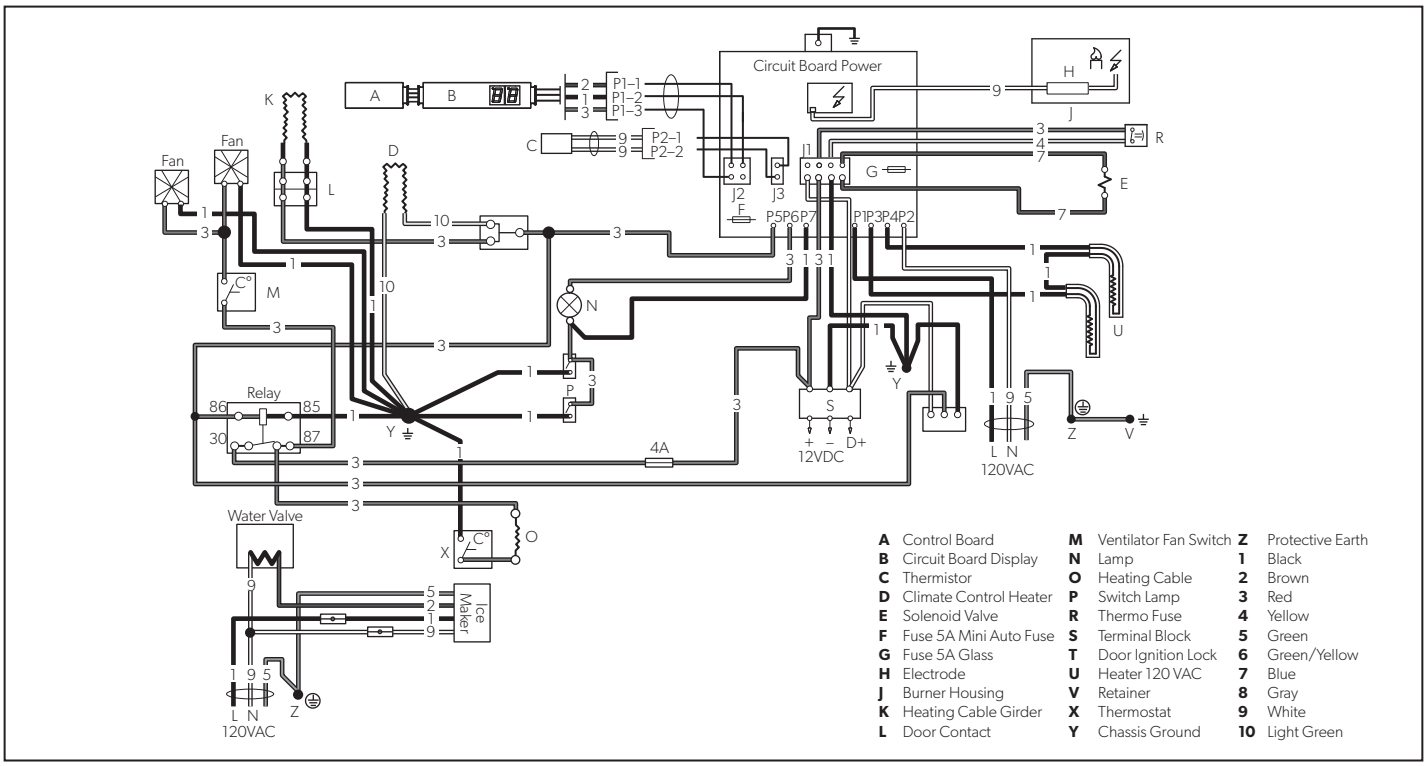

4 RM1350IM (automatic door lock, ice maker & steel doors)

6 Diagnostic Procedures

This section has information to help you identify various operational issues by diagnosing individual component parts.

Remember to check the basics, including contributing issues, before replacing any parts. Refer to "Installation Issues" on page 28 for more details.

Component	Diagnostic Question	Action Based On Status	Page
Burner Assembly			
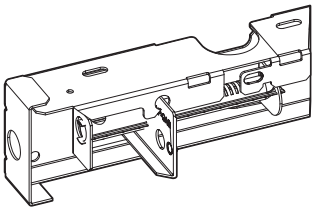	Does the refrigerator operate in electric mode but not in gas mode? Is the check indicator lamp on? (Americana models only) Is E3 displayed? (New Generation models only) Are two thermostat range setting lights flashing? (First generation DMR702 and DMR702-D models only)	1. Inspect the burner and the area around the burner for blockages. Clear any blockages. 2. Inspect the burner slots for clogs. Clean any that are clogged. 3. Turn on the refrigerator in gas mode. 4. Verify that the flame from the burner is blue and steady. 5. If the burner cannot be unclogged or if it appears damaged, replace the burner.	12 31
Climate Control Heater			
	Does condensation form in the fresh food compartment or around the door frame?	1. Test the climate control heater wiring for resistance. 2. If the reading is out of specification, replace the defective wire.	12 15
Communication Wire Harness			
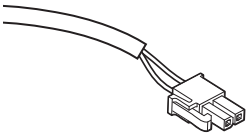	Is the refrigerator not operating but the interior light is on? Do the panel lights not turn on? Is E0 or E1 displayed? (New Generation models only) Are three thermostat range setting lights flashing or is the left thermostat range setting light flashing? (First generation DMR702 and DMR702-D models only)	1. Test each wire of the communication wire harness to confirm that there is continuity through the wire. 2. Test each wire of the communication wire harness to confirm that there is no continuity to the chassis ground or to the case of the refrigerator. 3. If the communication wire harness fails either test, replace it.	33

Component	Diagnostic Question	Action Based On Status	Page
Cooling Unit			
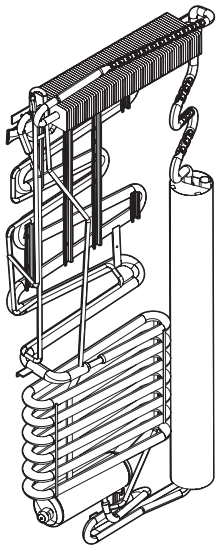	Is there a strong smell of ammonia? Is a loud gurgling noise coming from the cooling unit?	Replace the cooling unit.	32
	Is the refrigerator or freezer not cold enough in any operating mode? Is E3 displayed? (New Generation models only) Are two thermostat range setting lights flashing? (First generation DMR702 and DMR702-D models only)	1. Bypass the cooling unit and test it for blockage. 2. If the cooling unit fails the test, replace it.	
Door Flapper (RM1350 Model Only)			
	Is the refrigerator or freezer not cold enough in any operating mode? Does condensation form in the fresh food compartment or around the door frame? Does the door not close properly?	1. Inspect the flapper to confirm it closes without an air gap. 2. Adjust the flapper guides or flapper as needed.	36
Door Hinge			
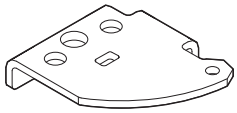	Does the refrigerator rapidly build up frost? Does condensation form in the fresh food compartment or around the door frame? Does the door not close properly?	1. Inspect each door hinge for warping or other damage. 2. If damage is observed, replace the door hinge.	37

Component	Diagnostic Question	Action Based On Status	Page
Doors			
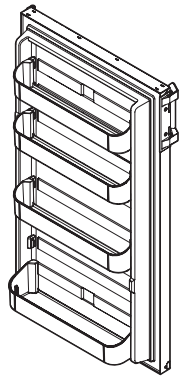	Is the refrigerator or freezer not cold enough in any operating mode? Does the refrigerator rapidly build up frost? Does condensation form in the fresh food compartment or around the door frame?	1. Inspect the door for warping or other damage that would prevent it from closing properly. 2. If damage is observed, replace the door.	35
		1. Test the door gasket. 2. If the gasket is weak at any point, repair it. 3. After 24 hours, test the gasket again. 4. If the gasket remains weak, refer to the parts list by product number to determine if the gasket is a replaceable part. 5. Can the gasket be replace? – Yes, replace the gasket as appropriate for the part and the refrigerator model. – No, replace the door.	35 35
		Confirm with the owner that the door has not been held open or opened often enough to allow a substantial volume of warm air to enter.	N/A
Electrode/Re-Igniter			
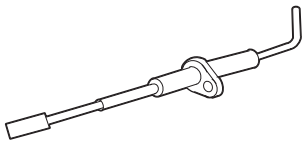	Does the refrigerator operate in electric mode but not in gas mode? Is the check indicator lamp on? (Americana models only)	1. Inspect the ceramic insulator for cracks or breaks in the ceramic casing. A hair line crack at the electrode can be difficult to see. 2. If cracks or breaks are observed, replace the electrode.	38
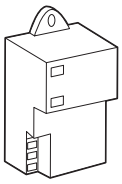		1. Confirm that the tip of the electrode is centered left-to-right and 3/16 in. (4.8 mm) above the burner. 2. If the electrode is out of position, adjust it.	
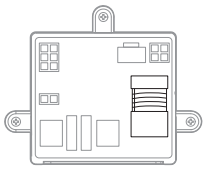		1. Turn on the refrigerator in gas mode and confirm that the electrode generates a spark. 2. If the electrode fails to generate a spark, perform the steps to disconnect the electrode from the re-igniter. 3. Use a pair of insulated needle nose pliers to hold the electrode connector about 1/2 in. (13 mm) from the re-igniter terminal. 4. Turn on the refrigerator in gas mode. 5. Does the re-igniter generate a spark? – Yes, replace the electrode and the high voltage cable. – No, replace the re-igniter.	 43

Component	Diagnostic Question	Action Based On Status	Page
Flue Baffle			
	Does the refrigerator operate in gas mode but does not cool properly?	1. Confirm that the flue baffle is properly hooked and positioned in the burner tube. 2. Inspect the flue baffle for damage. 3. If damaged is observed, replace the flue baffle.	38
Gas Valve			
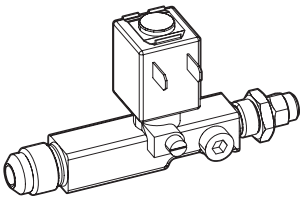	Does the refrigerator operate in electric mode but not in gas mode? Is E1 displayed? (New Generation models only) Is the left thermostat range setting light flashing? (First generation DMR702 and DMR702-D models only)	Confirm that the line on the manual shut off is in the horizontal, open position.	N/A
		1. Confirm that the resistance of the gas valve solenoid is within specification. 2. If the resistance is out of specification, replace the gas valve.	39
	Is the check indicator lamp on? (Americana models only)	1. Confirm that the voltage supplied to the gas valve is between 10.5–13.5 VDC. ℹ Test the voltage with the gas system turned on and under a load. 2. If the voltage is out of specification, perform a diagnostic on the power supply.	15
Heating Element			
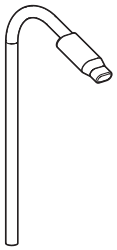	Does the refrigerator operate in gas mode but not in electric mode? Is E3 displayed? (New Generation models only) Are two thermostat range setting lights flashing? (First generation DMR702 and DMR702-D models only)	1. Check the part number of the heating element against the parts list for the model. 2. If the number does not match, replace the heating element with the correct part.	N/A
		1. Confirm that the heating element is firmly in the pocket of the flue stack and does not move side-to-side. 2. If loose, remove and re-seat the heating element in the flue stack.	12
		1. Inspect the heating element for cracks or breaks. 2. If damage is observed, replace the heating element.	40
		1. Confirm that the resistance of the heating element is within specification. 2. If the resistance is out of specification, replace the heating element.	

Component	Diagnostic Question	Action Based On Status	Page
Ice Maker			
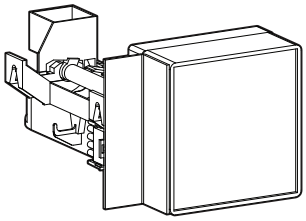	Does the ice maker not produce ice?	Confirm that the 120 VAC supplied to the ice maker is within tolerance (± 10%).	15
		Use a substance thermometer to confirm that the temperature in the freezer, next to the ice maker, is 12°F (-11°C) or colder.	N/A
		1. Bypass the ice maker and confirm that it cycles. 2. If the ice maker does not cycle, replace it.	41
		Perform a diagnostic on the water valve.	25
		Perform a diagnostic on the relay. (RM1350 model only)	22
	Is the ice maker over-filling or under-filling during operation?	1. Remove the plastic cover from the front of the ice maker. 2. The water supply adjustment screw is located above the gears. – Turn towards the + to increase the supply. – Turn towards the - to decrease the supply. One full turn in either direction equals an 18 cc change.	N/A
Interior Light			
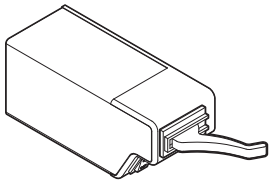	Does the interior light remain off when the door is open? Does the interior light remain on when the door is closed?	If the refrigerator was built prior to 2009, check the interior light assembly to determine if the low ambient light is switched on.	12
		1. With the refrigerator door open, depress the interior light switch. 2. If the light turns off, perform the following actions: – Inspect the switch for alignment issues that would prevent it from being depressed when the door is closed. – Realign the switch if needed. 3. If the light remains on, perform the following actions: – Inspect the switch for damage. – If damage is observed, replace the interior light assembly. 4. If the switch appears to be undamaged, test it for continuity. 5. Did the switch pass the continuity test?	42
		– No, replace the light assembly.	42
		– Yes, rewire the switch according to the wiring diagram.	15
		6. Depress the switch. 7. If the light remains on, replace the light assembly.	42

Component	Diagnostic Question	Action Based On Status	Page
Lower Control Module			
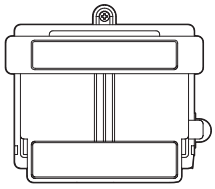	Is the refrigerator not operating and the interior light not on? (Americana models only)	1. Confirm that the voltage supplied to the lower control module at J4 is between 10.5–13.5 VDC. 2. If the voltage is out of specification, perform a diagnostic on the power supply.	15
		1. If the module is equipped with a 3 A 12 VDC fuse, test the fuse for continuity. 2. If the fuse is blown, replace it.	34
		1. Confirm that the voltage between the red (negative) and orange (positive) wires connected at P1 is between 10.5–13.5 VDC. 2. If the voltage is out of specification, replace the lower control module.	15 34
	Is the check indicator lamp on? (Americana models only)	1. Confirm that the voltage supplied to the lower control module at J4 is between 10.5–13.5 VDC. 2. If the voltage is out of specification, perform a diagnostic on the power supply.	15
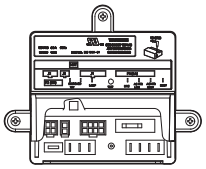	Is the refrigerator not operating and the interior light not on? (New Generation models only)	1. Confirm that the voltage supplied to the lower control module at terminal 6 is between 10.5–18 VDC. 2. If the voltage is out of specification, perform a diagnosis on the power supply.	15
		1. Test the 3 A 12 VDC fuse for continuity. 2. If the fuse is blown, replace it.	34
		1. Confirm that the voltage from terminal 2 is between 10.5–13.5 VDC. 2. If the voltage is out of specification, replace the lower control module.	15 34
	Is the refrigerator not operating but the interior light is on?	Perform a diagnostic on the lower control module to rule out any issues with power flow through the component.	21
	Does the refrigerator operate in electric mode but not in gas mode?	Perform a diagnostic on the communication wire harness.	16
	Does the refrigerator operate in gas mode but not in electric mode?	Perform a diagnostic for RF interference.	30
		1. Test the 5 A 120 VAC fuse for continuity. 2. If the fuse is blown, replace it.	34
		If the problem persists, replace the lower control module.	
	Is E3 displayed? (New Generation models only) Are two temperature setting lights blinking? (First generation DMR702 and DMR702-D models only)	1. Confirm that the voltage on the yellow wire to J1, terminal 3 is between 10.5–18 VDC. 2. If the voltage is out of specification, perform a diagnosis on the power supply.	15
		If the error persists, replace the lower control module.	49

Component	Diagnostic Question	Action Based On Status	Page
	Is E4 displayed? (New Generation models only) Is the right temperature setting light blinking? (First generation DMR702 and DMR702-D models only)	1. Confirm that the voltage supplied to the lower control module at terminal 6 is between 10.5–18 VDC. 2. If the voltage is out of specification, perform a diagnosis on the power supply.	15
		If the error persists, replace the lower control module.	49
Orifice			
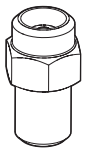	Does the refrigerator operate in electric mode but not in gas mode? Is the check indicator lamp on? (Americana models only) Is E3 displayed? (New Generation models only) Are two thermostat range setting lights flashing? (First generation DMR702 and DMR702-D models only)	1. Check the part number and size of the orifice against the parts list for the refrigerator model. 2. If the number does not match, replace the orifice with the correct part.	43
		1. Remove the orifice. 2. Hold the orifice up to a light. You should be able to see through the orifice and it should appear pink in color. Do not blow compressed air or stick anything into the orifice. The orifice has a man-made ruby inset that is easy to dislodge. If dislodged, the orifice must be replaced. 3. If the orifice is clogged, soak it in an alcohol-based solvent for one hour. 4. Remove it from the cleaner and let it air dry. 5. If the orifice is still clogged, replace it.	
Relay (RM1350 Model Only)			
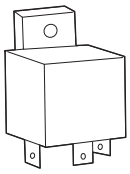	Is the refrigerator or freezer not cold enough in any operating mode? Does the ice maker not produce ice?	1. Confirm that the voltage from the lower control module to terminal 86 is between 10.5–18 VDC. 2. If the voltage is out of specification, perform a diagnosis on the power supply.	15
		1. Test for continuity between terminal 30 and terminal 87. 2. Test terminal 85 to confirm that there is no continuity to the chassis ground.	44
		3. If the relay fails either test, replace it.	44
Thermal Fuse			
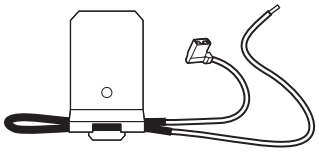	Is the refrigerator not operating and the interior light not on? Is E3 displayed? (New Generation models only) Are two thermostat range setting lights flashing? (First generation DMR702 and DMR702-D models only)	1. Test for continuity through the thermal fuse. 2. If there is no continuity, replace the thermal fuse.	45

Component	Diagnostic Question	Action Based On Status	Page
Thermistor			
	Is the refrigerator not operating but the interior light turns on? Is the refrigerator or freezer not cold enough in any operating mode? Does the fresh food compartment freeze?	1. Confirm that the resistance of the thermistor is within specification. 2. If the resistance is out of specification, replace the thermistor.	46
	Is E2 displayed? (New Generation models only) Is the middle thermostat range setting light flashing? (First generation DMR702 and DMR702-D models only)	1. Confirm that the resistance of the thermistor is within specification. 2. If the resistance is out of specification, replace the thermistor. 3. Test each pin of the thermistor for continuity. 4. If the thermistor is shorted to ground, replace it.	
Thermocouple (Older Americana Models Only)			
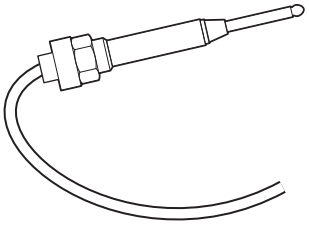	Does the refrigerator operate in electric mode but not in gas mode? Is the check indicator lamp on?	Models with integrated ignition where the re-igniter is on the lower control module do not use a thermocouple. 1. Confirm that the gas is lighting but not staying lit or that the electrode continues to spark while in the flame. 2. Confirm that the voltage of the thermocouple while in the burner flame is between 25–35 mV. 3. If the voltage is out of specification, replace the thermocouple.	47
Thermo Fuse (Americana Models Only)			
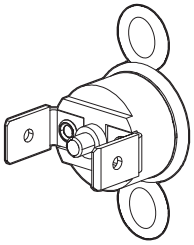	Is the refrigerator not operating and the interior light not on?	1. Test for continuity through the thermo fuse. 2. If there is no continuity, and a reset fails to restore continuity, replace the thermo fuse.	47
Thermofuse (New Generation Models Only)			
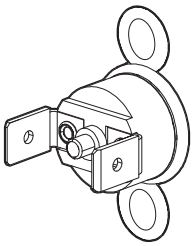	Is E3 displayed? Are two thermostat range setting lights flashing? (First generation DMR702 and DMR702-D models only)	1. Test for continuity through the thermofuse. 2. If there is no continuity, and a reset fails to restore continuity, replace the thermofuse.	48

Component	Diagnostic Question	Action Based On Status	Page
Upper Control Module			
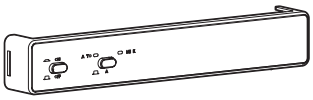	Is the refrigerator not operating but the interior light is on? Does the refrigerator operate in electric mode but not in gas mode? Does the refrigerator operate in gas mode but not in electric mode?	Confirm the mode or switch is set correctly.	N/A
	Is the refrigerator not operating and the interior light not on? (Americana models only)	Confirm the mode or switch is set correctly.	N/A
		1. Confirm that the voltage between the red (negative) and orange (positive) wires connected at P1 is between 10.5–13.5 VDC.	15
		2. If the voltage is within specification, replace the upper control module. – Models DM 2652 and DM2852 only. Replace the circuit board.	49
	Is the refrigerator not operating and the interior light not on? (New Generation models only)	1. Confirm that the voltage between the red (positive) and black (negative) wires on the communication wire harness is between 10.5–18 VDC.	15
		2. If the voltage is within specification, replace the upper control module. – Models DM 2652 and DM2852 only. Replace the circuit board.	49
Ventilator Fan/Switch			
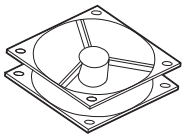	Is the refrigerator or freezer not cold enough in any operating mode?	1. Confirm that the temperature at the ventilator fan switch is within the range that will activate the ventilator fan. Installation location varies by model and installer. The temperature range for activation varies by model.	51
		2. If the temperature is within specification, does the fan switch close the circuit? 3. If the circuit does not close, replace the fan switch.	
		4. If the circuit closes, but the fan does not activate, confirm that the voltage supplied to the fan is between 10.5–22 VDC.	15
		5. If the voltage is within specification, replace the fan.	50

Component	Diagnostic Question	Action Based On Status	Page
		Water Valve	
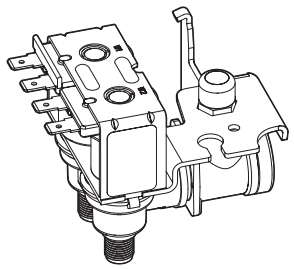	Does the ice maker not produce ice?	1. Confirm that the water supply to the ice maker is turned on and there are no breaks in the water line from the water valve to the ice maker. 2. Confirm the resistance on the water valve solenoid is within specification. 3. If the resistance is out of specification, replace the water valve.	31 52

6.1 Error-Based Diagnostics

Refer to the following tables to diagnose system errors for the Americana and New Generation models covered in this service manual.

6.1.1 Americana

Americana models have a check indicator lamp on the control panel that illuminates to indicate operational errors.

Fault Description	Possible Cause	Recommended Action	Page
The check indicator lamp is on.	The gas pressure is too low or absent.	Perform a diagnosis on the gas supply.	29
	The knob on the gas valve has been turned to the off or closed position. The gas valve solenoid is defective.	Perform a diagnostic on the gas valve.	19
	The DC voltage is too low.	Perform a diagnostic on the DC voltage supplied to the lower control module.	21
		Perform a diagnostic on the DC voltage supplied to the gas valve.	19
	There is a loose or weak ground.	Clean or tighten the ground connections for the lower control module, gas valve, and RV converter as needed. Strip back the wiring and make new connections as needed.	15
	There is a short or a failed circuit in the lower control module.	Perform a diagnostic on the lower control module.	21
	The thermocouple is defective.	Perform a diagnostic on the thermocouple.	23
	The re-igniter is not creating a spark.	Perform a diagnostic on the re-igniter.	18
	The electrode is not functioning properly.	Perform a diagnostic on the electrode.	
	The orifice is blocked or incorrectly sized.	Perform a diagnostic on the orifice.	22
	The burner is blocked.	Perform a diagnostic on the burner assembly.	16
	The altitude is affecting the operation of the refrigerator in gas mode.	Perform a diagnostic for altitude issues.	30

6.1.2 New Generation

New Generation models (except for model DMR702) display an error code to indicate operational errors.

The DMR702 model has three thermostat range setting lights used to indicate where the temperature is set. A light or combination of lights will flash to indicate operational errors.

Fault Description	Possible Cause	Recommended Action	Page
E0 is displayed. Three thermostat range setting lights are flashing. (First generation DMR702 and DMR702-D models only)	The DC voltage is too low. The lower control module cannot handle the AC ripple level.	Perform a diagnostic on the power supply.	29
	The communication wire harness has lost continuity or is shorted to ground.	Perform a diagnostic on the communication wire harness.	16
	There is a loose or weak ground.	Clean or tighten the ground connections for the lower control module, gas valve and RV converter as needed. Strip back the wiring and make new connections as needed.	15
	There is RF interference.	Perform a diagnostic for RF interference.	30
	There is a short or a failed circuit in the lower control module.	If the error persists, replace the lower control module.	34
	The upper control module is defective.	If replacing the lower control module does not resolve the error, replace the upper control module.	49
E1 is displayed. The left thermostat range setting light is flashing. (First generation DMR702 and DMR702-D models only)	The gas pressure is too low or absent. The knob on the gas valve has been turned to the off or closed position.	Perform a diagnostic on the gas supply.	29
	The resistance on the gas valve solenoid is out of specification.	Perform a diagnostic on the gas valve.	19
	The communication wire harness has lost continuity or is shorted to ground.	Perform a diagnostic on the communications wire harness.	16
	There is a loose or weak ground.	Clean or tighten the ground connections for the lower control module, gas valve, and RV converter as needed. Strip back the wiring and make new connections as needed.	15
	There is RF interference.	Perform a diagnostic for RF interference.	30
	There is a short or a failed circuit in the lower control module.	If the error persists, replace the lower control module.	34
	The upper control module is defective.	If replacing the lower control module does not resolve the error, replace the upper control module.	49
E2 is displayed. The middle thermostat range setting light is flashing. (First generation DMR702 and DMR702-D models only)	The thermistor has a bad connection. There is a short in the thermistor wire. The thermistor is not operating within the proper temperature range. There is a short or a failed circuit in the lower control module.	1. Perform a diagnostic on the thermistor. 2. If the error persists, replace the lower control module.	23 34

Fault Description	Possible Cause	Recommended Action	Page
E3 is displayed. Two thermostat range setting lights are flashing. (First generation DMR702 and DMR702-D models only)	The thermal fuse is tripped.	Perform a diagnostic on the thermal fuse.	22
	The thermofuse is defective.	Perform a diagnostic on the thermofuse.	23
	Improper installation caused an imbalance in the airflow around the refrigerator.	Perform a diagnostic on the air space and ventilation.	29
	The heating element is out of specification or loose.	Perform a diagnostic on the heating unit.	19
	The gas pressure is too low or absent.	Perform a diagnostic on the gas supply.	29
	The orifice is blocked.	Perform a diagnostic on the orifice.	22
	The burner is blocked.	Perform a diagnostic on the burner assembly.	16
	The cooling unit is defective.	Perform a diagnostic on the cooling unit.	17
	There is a short or a failed circuit in the lower control module.	Perform a diagnostic on the lower control module.	21
E4 is displayed. The right thermostat range setting light is flashing. (First generation DMR702 and DMR702-D models only)	The DC voltage is too low. There is a short or a failed circuit in the lower control module.	Perform a diagnostic on the lower control module.	21

7 Installation Issues

Many refrigerator problems are caused by issues outside of the product itself. When diagnosing a refrigerator problem, always check the issues described in this section before replacing components.

Operational Issue	Potential Issue
The refrigerator is not operating and the interior light not on. The refrigerator is not operating but the interior light turns on. The refrigerator operates in gas mode but not in electric mode. The ice maker is not producing ice. The check indicator lamp is on. (Americana models only) E1 or E4 is displayed. (New Generation models only) The left or right thermostat range setting light is flashing. (First generation DMR702 and DMR702-D models only)	Power

Operational Issue	Potential Issue
The refrigerator operates in electric mode but not in gas mode. The check indicator lamp is on. (Americana models only) E1 is displayed. (New Generation models only) The left thermostat range setting light is flashing. (First generation DMR702 and DMR702-D models only)	Gas Pressure
The refrigerator or freezer is not cold enough in any operating mode. E3 is displayed. (New Generation models only) The right thermostat range setting light is flashing. (First generation DMR702 and DMR702-D models only)	Improper Installation

Operational Issue	Potential Issue
The check indicator lamp is on. (Americana models only) E1 is displayed. (New Generation models only) The left thermostat range setting light is flashing. (First generation DMR702 and DMR702-D models only)	Altitude
E0 or E1 is displayed. (New Generation models only) The left or three thermostat range setting lights are flashing. (First generation DMR702 and DMR702-D models only)	RF Interference

7.1 Power Issues

The following checks should be made using the battery, converter, or generator, where applicable. Do not use a test light, as it does not provide enough useful information for a proper diagnosis.

Use a digital multi-meter to take voltage readings. Check that the DC power to the refrigerator is between 10.5–18 VDC during operation, testing with the interior lights both on and off.

A check light will occur when voltage is less than 9.6 VDC. (Americana models only.)

Check that the AC power to the refrigerator is between 103.5–126.5 VAC for electric operation (Auto mode), testing with the interior lights both on and off.

Use a multi-meter to take AC voltage readings at the DC terminal block connections while the converter is under a load. Check that the AC ripple is 2 VAC or lower. If the reading is higher, the power issue originates with the converter.

The control modules can function with up to 6 VAC of AC ripple, however anything above 2 VAC can cause communication issues.

7.2 Gas Pressure Issues

Check that the gas pressure is between 10.5–11.5 in. W.C., ideally as close to 11 in. W.C. (at the refrigerator) as possible. Perform the check with a minimum of 50% (ideally 100%) of other gas-fired appliances operating while the refrigerator is in operation. The pressure should be tested using a U-tube manometer. If using a digital-type manometer, calibrate it often with a U-tube manometer.

Check the outside air temperature. As the air gets colder, it reduces the capacity of the liquid propane (LP) tank and the gas pressure is affected by a combination of the fill level of the LP tanks and the ambient temperature outside.

To raise the tank temperature and increase the capacity of the tank:

1. Place an insulated, fire-resistant blanket over the tanks.
2. Place an illuminated 75 W light bulb under the blanket.

The temperature of the bottle should rise 10–20°F [(-12)–(-7)°C] over a brief period of time, which increases tank capacity.

For older RVs, it may be necessary to supply gas directly to the refrigerator from a regulated shop tank in order to bypass any issues related to blocked gas lines from the RV.

7.3 Installation Issues

Specific clearances are required during the installation of the refrigerator. Check the installation manual for the refrigerator to find the proper dimensions, and ensure that the existing installation location complies with the requirements. In addition, check for these potential installation issues:

- Fan(s): when installing the refrigerator with two side wall vents (typically slide-out room installations), a ventilator fan must be installed at the rear of the refrigerator to assist with airflow.
- Leveling: the refrigerator should be set at 3° from left to right and 6° from front to back. Level the refrigerator within this tolerance setting.

- Air space: after installing the refrigerator within the cabinetry, there should be less than 0.5 in. (13 mm) of open air space on the sides and top of the refrigerator or performance issues can occur. If there is any open air space around the refrigerator, fill the space with insulation. There should be no more than 1 in. (25 mm) of space between the cooling unit and the side wall of the RV. If there is more than 1 in. (25 mm) of space, install a baffle box to fill the extra space.
- Baffle extension: when installing the refrigerator with two side wall vents (typically slide-out room installations) and the outer edge of the cooling unit more than 1 in. (25 mm) from the sidewall of the RV, install a baffle extension below the fins. Start at the lower portion of the upper vent and lead up to between 0.25–0.50 in. (6–13 mm) away from the bottom of the condensing fins to ensure a strong airflow is maintained directly to and through the fins.
- Deflector shield: when installing the refrigerator with two side wall vents (typically slide-out room installations), install a deflector shield air baffle (turning vein) above the condensing fins to assist with deflecting the air sideways out of the upper side wall vent after the air passes through the fins.

7.4 Ambient Temperature Issues

The ambient temperature can impact the performance of the refrigerator. As the ambient temperature rises, the air temperature around the cooling unit rises and may result in decreased cooling performance if the unit is not installed and ventilated according to specification. Refer to "Installation Issues" on page 29 for more details.

If the ambient temperature is below 32 °F(0 °C) operating the refrigerator may damage the cooling unit.

7.5 Humidity Issues

High levels of humidity can impact the cooling performance of the refrigerator and can cause condensation and frost build up if the doors are opened frequently.

7.6 Altitude Issues

The gas system on the refrigerators are not designed to operate at extremely high altitude. The higher the refrigerator is in altitude, the more chance there is of improper gas operation until the refrigerator is brought to a lower altitude.

7.7 RF Interference Issues

Supply the refrigerator with straight-line DC voltage from a different 12 VDC source and deaden the RV (unplug shore cord and disconnect the batteries), this will eliminate interference.

8 Service Procedures

WARNING: ELECTRICAL SHOCK, FIRE, AND/OR EXPLOSION HAZARD. Failure to obey the following warnings could result in death or serious injury:

After service, perform a leak check on the gas system, like a pressure drop test. Verify that there is a sufficient gas supply before attempting to light any burner. Air in the line will significantly delay the burner ignition and a burner may light unexpectedly as the air in the line clears out and is replaced by LP gas.

This section has information to help you access the components for diagnosis and service.

Remember to check the basics, including contributing issues, before replacing any parts. Refer to "Installation Issues" on page 29 for more details.

8.1 Removing the Refrigerator from an Enclosure

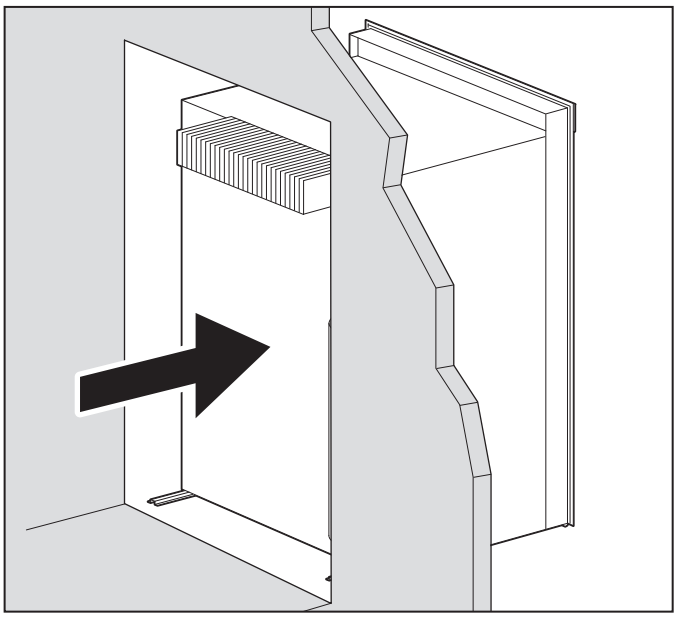

5 Removing the Refrigerator from an Enclosure

1. Disconnect the unit from all power sources (120 VAC and 12 VDC).
2. Turn off the LP gas supply to the refrigerator.
3. Disconnect the LP gas line from the refrigerator. Cap the line and verify there are no LP gas leaks. Refer to "Performing a Gas Leak Test" on page 31 for more details.
4. For units with ice makers, perform the following actions:
   - Turn off the water supply to the refrigerator.
   - Disconnect the water line.
   - Disconnect the drain hose.
5. Remove the screws anchoring the refrigerator to the enclosure.
6. Slide the refrigerator out of the enclosure.
7. Perform these steps in reverse to replace the refrigerator in the enclosure.
8. Verify there are no LP gas leaks. Refer to "Performing a Gas Leak Test" on page 31 for more details.

8.2 Performing a Gas Leak Test

WARNING: FIRE AND/OR EXPLOSION HAZARD.

Do **not** use matches, candles, or other sources of open flame when checking for gas leaks. Failure to obey this warning could result in death or serious injury.

1. Turn on the LP gas supply to the refrigerator.
2. Locate the component for testing. See "Component Locations" on page 12.
3. Place a non-corrosive leak detection fluid into a spray bottle.
4. Lightly spray the component with the fluid.
5. Look for bubbles forming on the component.

   The appearance of bubbles indicates a leak in the component.

8.3 Replacing the Burner Assembly

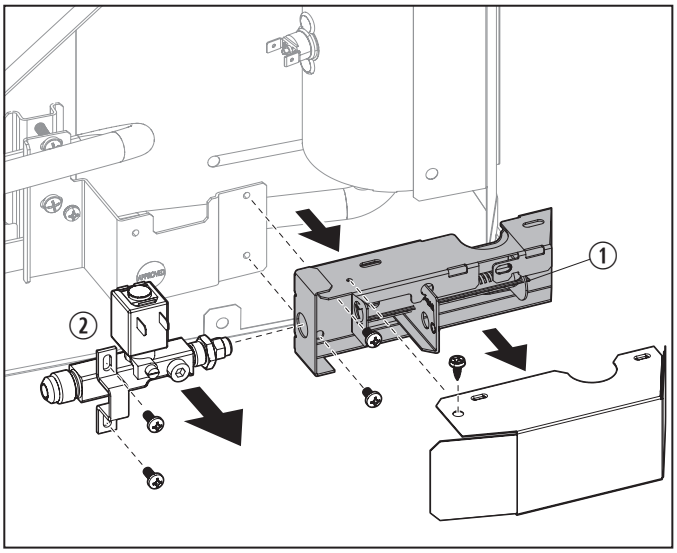

6 Removing the Burner Assembly

① Burner Assembly ② Gas Valve

1. Disconnect the unit from all power sources (120 VAC and 12 VDC).
2. Shut off the LP gas supply to refrigerator.
3. Disconnect the wiring to the gas valve solenoid.

4. Disconnect the LP gas supply line from the gas valve and cap the gas line.
5. Remove the nut and screws securing the gas valve to the burner housing.
6. Slide the gas valve out from the burner housing.
7. Remove the screws securing the burner housing to the back of the refrigerator and remove the burner housing.
8. Perform these steps in reverse with a new burner housing to complete the replacement.
9. Verify there are no LP gas leaks. Refer to "Performing a Gas Leak Test" on page 31 for more details.

8.4 Testing the Climate Control Heater for Resistance

1. Disconnect the unit from all power sources (120 VAC and 12 VDC).
2. Depending on the model of the refrigerator, flip up the lower control module cover (New Generation and some DMR702 models) or locate and remove the screw securing the cover to the refrigerator wall.
3. Refer to the "Wiring Diagrams" on page 15 to locate the wiring to the climate control heater.
4. Set the multi-meter to the Ohms resistance setting.
5. Attach the leads of the multi-meter to the terminal ends of the wires to the climate control heater.

   The reading should be between 22–26 Ohms. If the reading is out of specification, it indicates a faulty wire to the climate control heater.

Consult the operating manual for the multi-meter for specific device function.

8.5 Testing the Cooling Unit in Bypass Mode

The temperature outside the refrigerator must be warmer than 50°F (10°C).

1. Prepare the thermistor for the test determined by the model of the refrigerator.
   - New Americana, perform the steps in "Replacing the Thermistor" on page 46 to remove the thermistor.
   - New Generation, perform the steps in "Replacing the Thermistor" on page 46 to install a spare thermistor and position the thermistor to hang out of the lower access door.
2. Set the refrigerator to electric.
3. Place a bottle of water in the fresh food compartment.
4. Let the refrigerator run in this state for 6-8 hours.
5. Use a substance thermometer to test the temperature of the water in the bottle.

   The temperature in the fresh food compartment should read within ANSI specifications (43 °F (6 °C) or lower). If the reading is out of specification, it indicates a blocked cooling unit.

8.6 Replacing the Cooling Unit

1. Perform the steps in "Removing the Refrigerator from an Enclosure" on page 31.
2. Remove the handles (if needed) and lay the refrigerator face down on a protected surface.
3. Remove the screws securing the outside frame of the cooling unit to the box of the refrigerator.
4. Remove the electric heating element(s) from their pockets in the cooling unit and set aside to re-use.
5. Pull the flue baffle from the top of the burner tube of the defective cooling unit and set aside to re-use.

Replacement cooling units do not come with a replacement flue baffle. The flue baffle must be transferred from the defective cooling unit to the new cooling unit.

6. Disconnect all wiring from the lower control module, gas valve, thermo fuse, and ventilator fan/switch (if installed).

7. Refer to "Replacing the Burner Assembly" on page 31 "Replacing the Gas Valve" on page 39 and "Replacing the Lower Control Module" on page 34 for steps to separate the lower control module, gas valve, and burner assembly from the cooling unit.

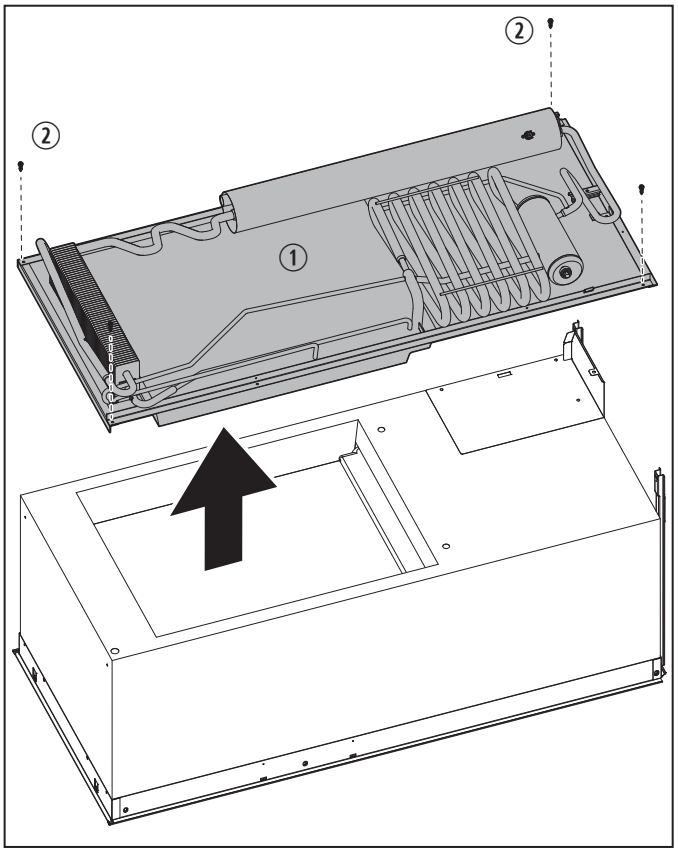

7 Removing the Defective Cooling Unit

① Cooling Unit ② Screws

8. Pry out the defective cooling unit. Some careful force may be required.

9. Clean and prepare inside the cavity space for the new cooling unit. A bead of thermal mastic is required to help the heat transfer process.

10. Apply a thick bead of thermal mastic to the following:
    - The cavity-facing side of the new cooling coils.
    - Each inner corner of the recessed cavity from bottom to top.
    - Around the middle of the inner walls of the cavity.

11. Perform these steps in reverse with the new cooling unit to complete the replacement.

8.7 Testing the Communication Wire Harness for Continuity

1. Perform the steps in "Replacing the Communication Harness" on page 33 to disconnect the communication wire harness from the upper and lower control modules.

2. Attach the leads of the multi-meter, one to each end of a harness wire.

   The reading should show continuity. If it shows no continuity, it indicates a break in the wire.

3. Leave one lead of the multi-meter attached to the harness wire and touch the other lead first to the chassis ground and then to the case of the refrigerator.

   The reading should show no continuity. If it shows continuity, it indicates a short to ground.

4. Repeat steps 2–3 for the remaining harness wires.

Consult the operating manual for the multi-meter for specific device function.

8.8 Replacing the Communication Harness

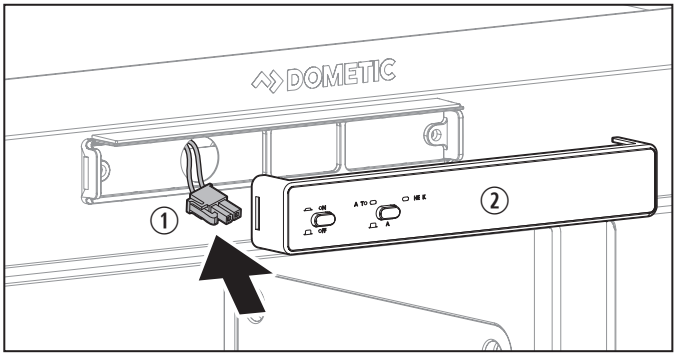

8 Removing the Communication Harness

① Communication Harness ② Control Module

1. Disconnect the unit from all power sources (120 VAC and 12 VDC).

2. Disconnect the communication wire harness from the lower control module.

3. Gain access to the back of the upper control module and disconnect the communication wire harness.
4. Pull the defective communication wire harness out of the refrigerator.
5. Route the new communication wire harness through the box of the refrigerator.
6. Perform these steps in reverse to complete the replacement.

8.9 Testing a Lower Control Module Fuse for Continuity

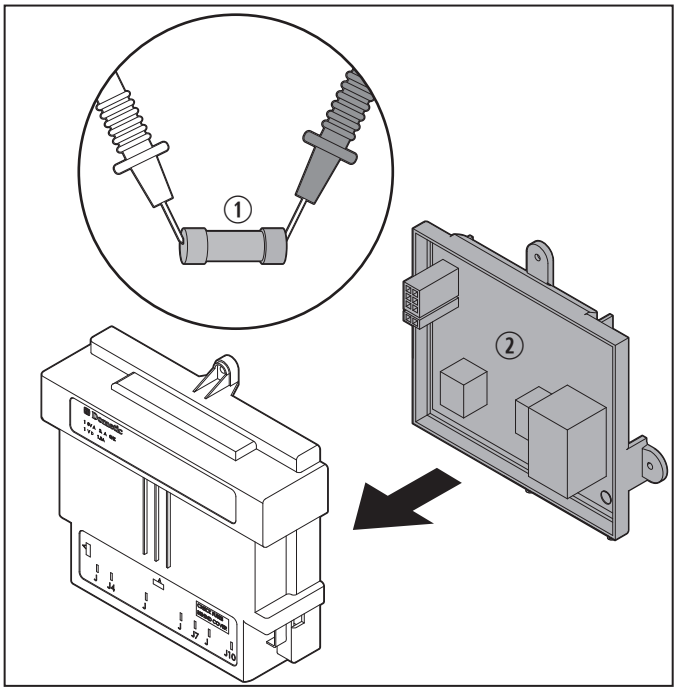

9 Removing and Testing the Fuse

① Fuse ② Lower Control Module

1. Perform the steps in "Replacing the Lower Control Module" on page 34 to access the lower control module.
2. Remove the fuse from the lower control module.
   - For a cartridge fuse, touch a lead of the multi-meter to each side of the fuse.
   - For a blade fuse, attach a lead to each connector.

   The reading should show continuity. If it shows no continuity, it indicates a blown fuse.

Consult the operating manual for the multi-meter for specific device function.

8.10 Replacing the Lower Control Module

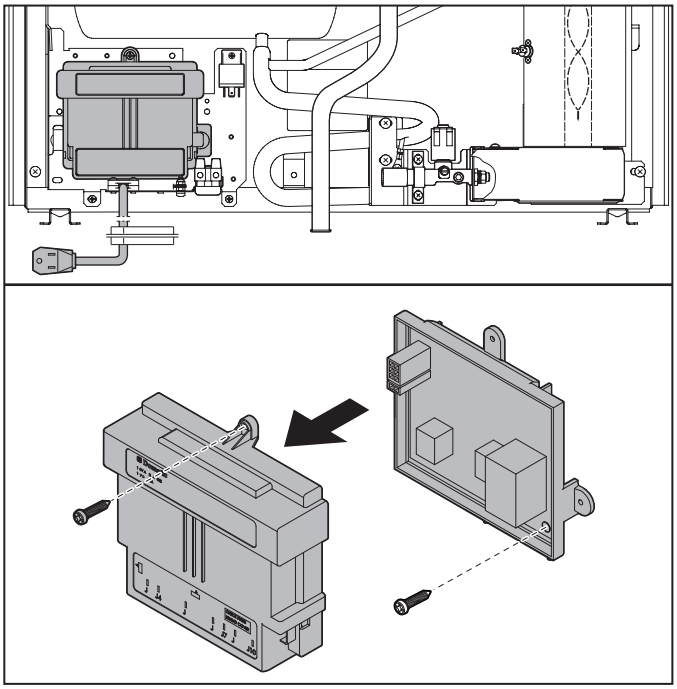

10 Removing the Lower Control Module

① Screw ② Lower Control Module

1. Disconnect the unit from all power sources (120 VAC and 12 VDC).
2. Make a note of the wire locations on the control module and remove all the connected terminals.
3. Locate and remove the screws securing the module to the refrigerator wall.
4. Remove the defective module.
5. Perform these steps in reverse with a new lower control module to complete the replacement.

8.11 Replacing the Door

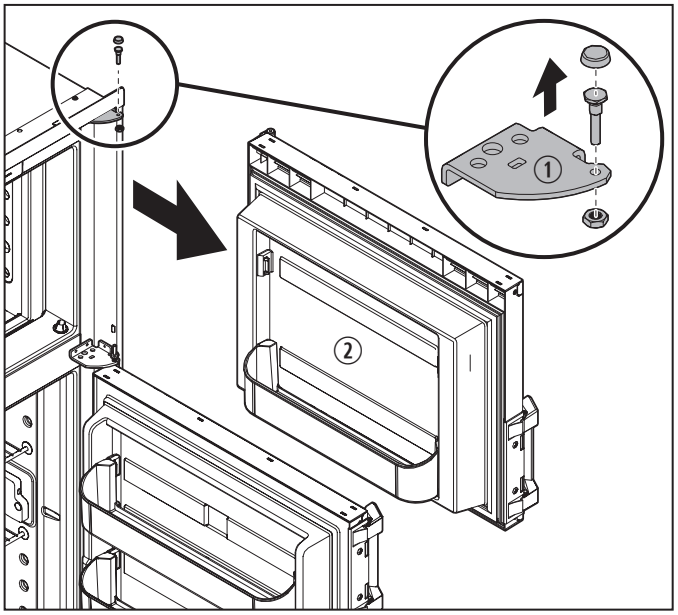

11 Removing the Door

① Door Hinge ② Door

The following steps may vary depending on the model, generation, number of doors, and direction the door opens.

1. Locate and gain access to the door hinges. Refer to "Removing the Refrigerator from an Enclosure" on page 31 if removing the refrigerator is necessary to access the hinges.
2. Remove the bolt from the top hinge securing the door to the hinge.
3. If replacing the fresh food door below a freezer door, access the middle hinge pin and remove it to free the door.
4. Remove any washers.
5. Lift the door from the bottom hinge pin. It may be necessary to do this at an angle.
6. Perform these steps in reverse with the new door to complete the replacement.

8.12 Testing the Door Gasket

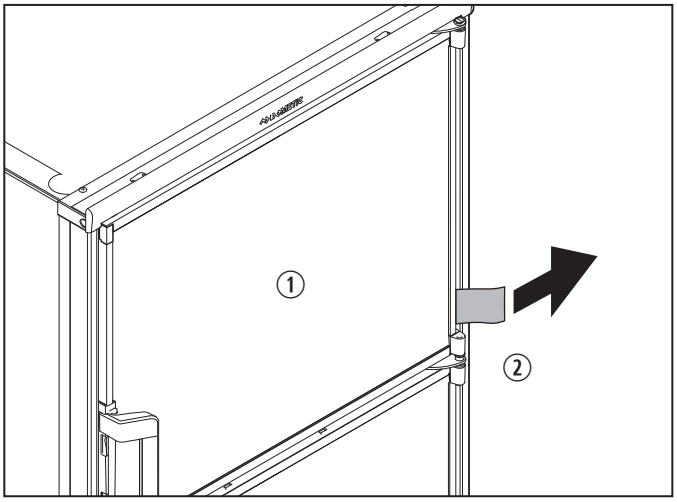

12 Testing the Door Gasket

① Door ② Paper

1. Open the refrigerator door and place a piece of paper, such as a dollar bill, near the door hinge and between the gasket and the liner of the refrigerator.
2. Close the door on the paper.
3. Try to pull out the paper.

   If the paper slips out with no resistance, the gasket is weak at that point.
4. Repeat this test at points all around the door.

8.13 Repairing the Door Gasket

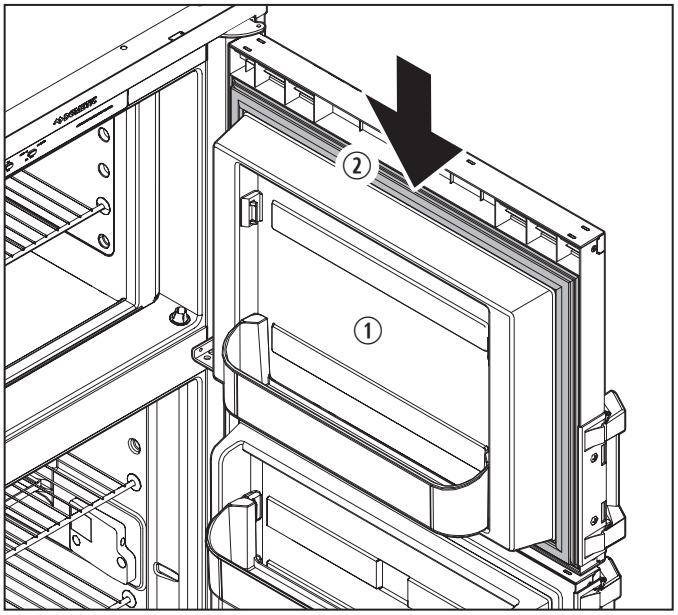

13 Repairing the Door Gasket

① Door ② Door Gasket

1. Warm the gasket with a heat gun.

To avoid melting or damaging the liner, take care to avoid using heat too close to the plastic liner or in one spot for too long.

2. Once the gasket is pliable, pull it open and place a 0.25 in. (6 mm) dowel rod (or tightly rolled newspaper) behind the gasket.
3. Close the door with the dowel rod in position and leave it closed for 24 hours.

8.14 Adjusting the Door Flapper (RM1350 Model Only)

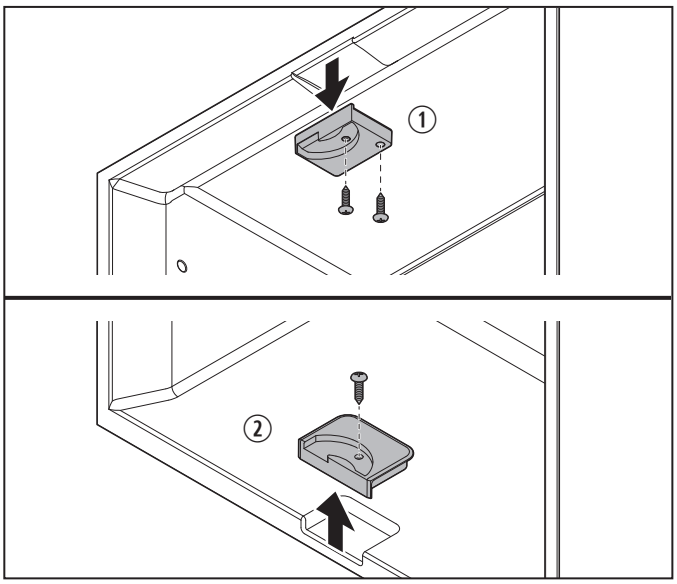

14 Adjusting the Flapper Guides

① Upper Flapper Guide ② Lower Flapper Guide

Perform the following actions as needed to ensure that the door flapper operates smoothly and closes without an air gap between the flapper and the refrigerator.

- Loosen the screws securing the upper or lower flapper guide to the lining of the refrigerator and adjust the guide.
- Install a shim below the top hinge of the door as needed.

8.15 Replacing the Door Hinge

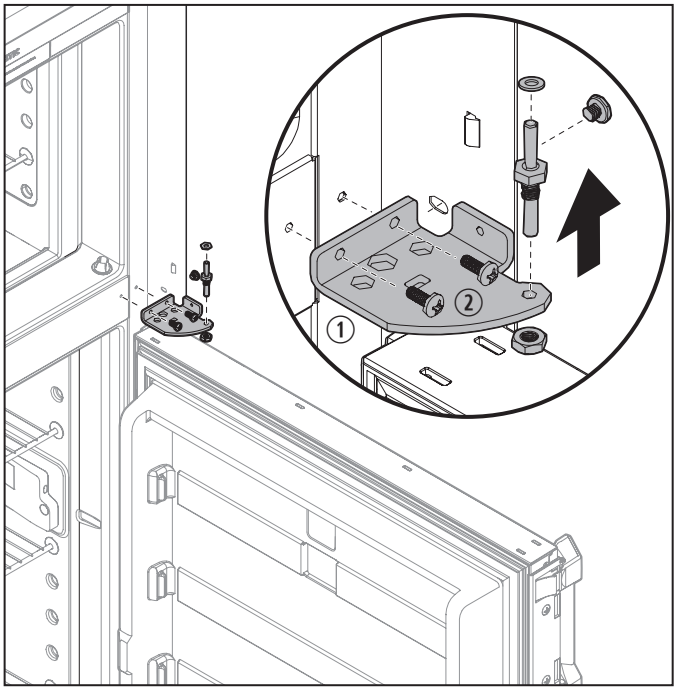

15 Removing the Door Hinge

① Door Hinge ② Screws

The following steps may vary depending on the model, generation, number of doors, and direction the door opens.

1. Follow the steps in "Replacing the Door" on page 35 to access the hinges and remove the door from the refrigerator.
2. Remove the screws securing the hinge to the refrigerator.
3. Perform these steps in reverse with the new hinge to complete the replacement.

8.16 Adjusting the Position of the Electrode

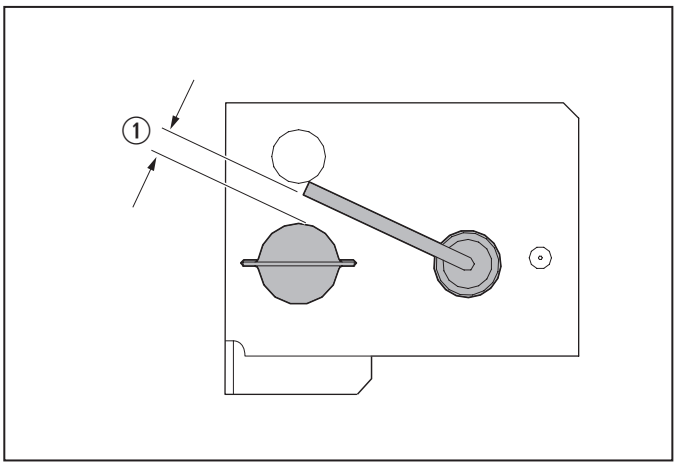

16 Adjusting the Electrode Gap

① Gap: 3/16 in. (4.8 mm)

1. Disconnect the unit from all power sources (120 VAC and 12 VDC).
2. Remove the shielding around the burner housing to access the electrode.
3. Loosen the set screw securing the electrode to the burner housing.

To avoid cracking the ceramic insulator, do not try to adjust the electrode without first loosening the screw that holds it in position.

4. Adjust the electrode until the tip of the electrode is centered left-to-right and 3/16 in. (4.8 mm) above the burner.
5. Perform these steps in reverse to complete the adjustment.

8.17 Replacing the Electrode

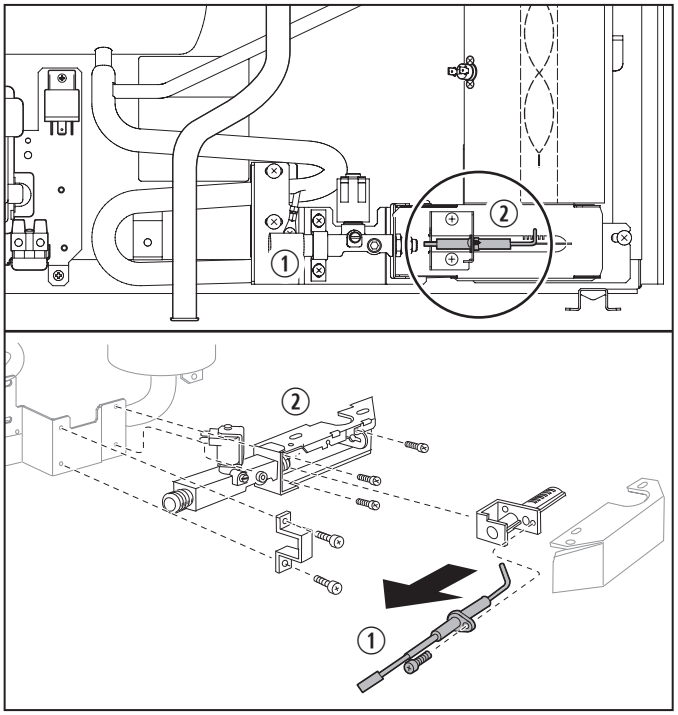

17 Removing the Electrode

① Electrode ② Burner Assembly

On newer units, the electrode and high voltage wire are integrated into one component. Always use the product number to acquire the correct part.

1. Disconnect the unit from all power sources (120 VAC and 12 VDC).
2. Remove the shielding around the burner housing to access the electrode.
3. Remove the set screw securing the electrode to the burner housing.
4. Pull the defective electrode out and disconnect the wiring from the re-igniter.
5. Perform these steps in reverse with the new electrode to complete the replacement.

8.18 Replacing the Flue Baffle

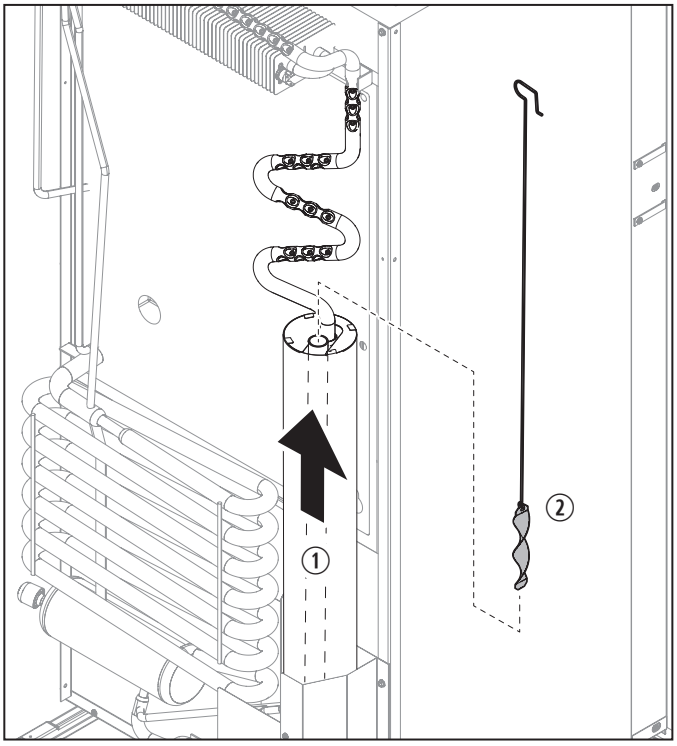

18 Removing the Flue Baffle

① Flue Baffle ② Burner Tube

1. If necessary, perform the steps in "Removing the Refrigerator from an Enclosure" on page 31 to access the flue baffle.
2. Locate the flue baffle hook at the top of the burner tube.

WARNING: BURN HAZARD.
The flue baffle may be hot. Allow time for the flue baffle to cool before touching. Failure to obey this warning could result in death or serious injury.

3. Pull the flue baffle out from the top of the burner tube.
4. Perform these steps in reverse to complete the replacement.

   The new flue baffle should hang just above the burner.

8.19 Testing the Gas Valve for Resistance

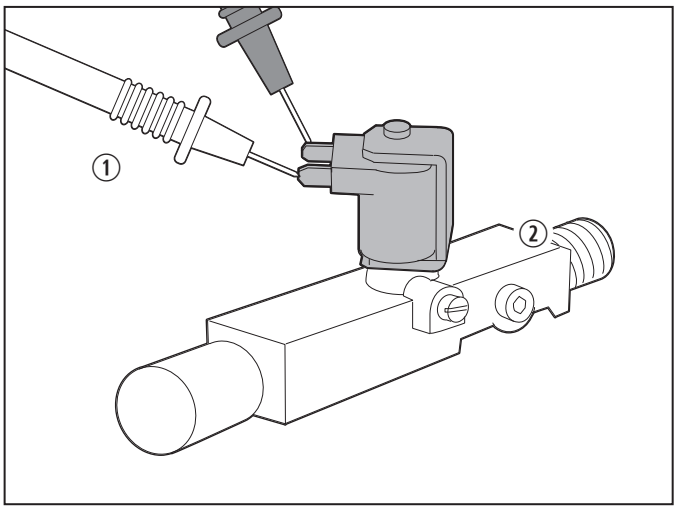

19 Testing the Gas Valve Solenoid

① Blades ② Gas Valve Solenoid

1. Perform the steps in "Replacing the Gas Valve" on page 39 to remove the gas valve.
2. Set the multi-meter to the Ohms resistance setting.
3. Attach the leads of the multi-meter to the blades of the gas valve solenoid.

   The reading should be between 44–60 Ohms. If the reading is out of specification, it indicates a faulty gas valve solenoid.

Consult the operating manual for the multi-meter for specific device function.

8.20 Replacing the Gas Valve

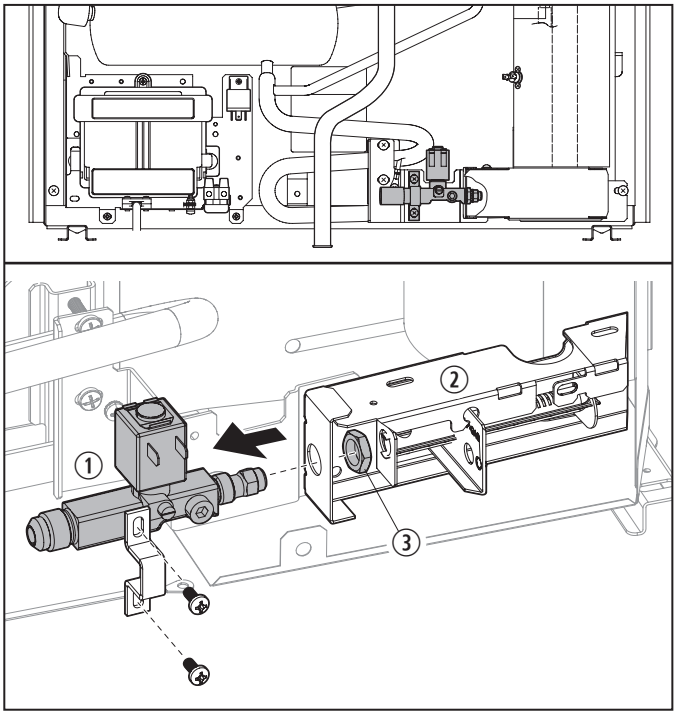

20 Accessing the Gas Valve

① Gas Valve ③ Nut
② Burner Assembly ④ Screws

1. Disconnect the unit from all power sources (120 VAC and 12 VDC).
2. Disconnect the wiring to the gas valve solenoid.
3. Turn off the LP gas supply to the refrigerator.
4. Remove the nut and screws securing the gas valve to the burner housing.
5. Pull the defective gas valve away from the burner housing.
6. Perform these steps in reverse with the new gas valve to complete the replacement.
7. Verify there are no LP gas leaks. Refer to "Performing a Gas Leak Test" on page 31 for more details.

8.21 Testing the Heating Element for Resistance

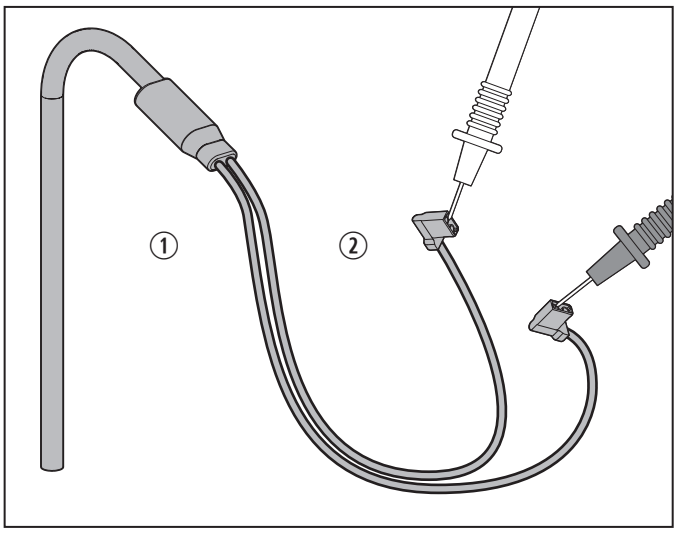

21 Testing the Heating Element Connectors

① Heating Element ② Connectors

1. Perform the steps in "Replacing the Heating Element" on page 40 to remove the heating element.
2. Set the multi-meter to the Ohms resistance setting.
3. Attach a lead of the multi-meter to each of the heating element connectors.

   The reading should be within specification (± 10%) for the model. Refer to the parts list by product number to find the Ohms resistance range. If the reading is out of specification, it indicates a faulty heating element.

Consult the operating manual for the multi-meter for specific device function.

8.22 Replacing the Heating Element

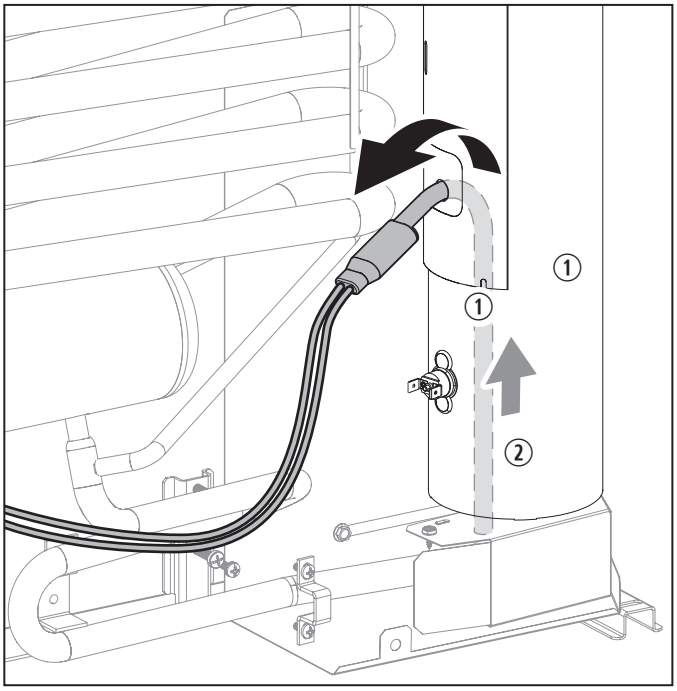

22 Removing the Heating Element from the Flue Stack

① Flue Stack ② Heating Element

1. Disconnect the unit from all power sources (120 VAC and 12 VDC).
2. Disconnect the heating element wiring from the lower control module.
3. Remove the defective heating element from the pocket within the flue stack.
4. Perform these steps in reverse with a new heating element to complete the replacement.

Ensure the new heating element is firmly seated in the pocket and does not move side-to-side.

8.23 Bypassing the Ice Maker

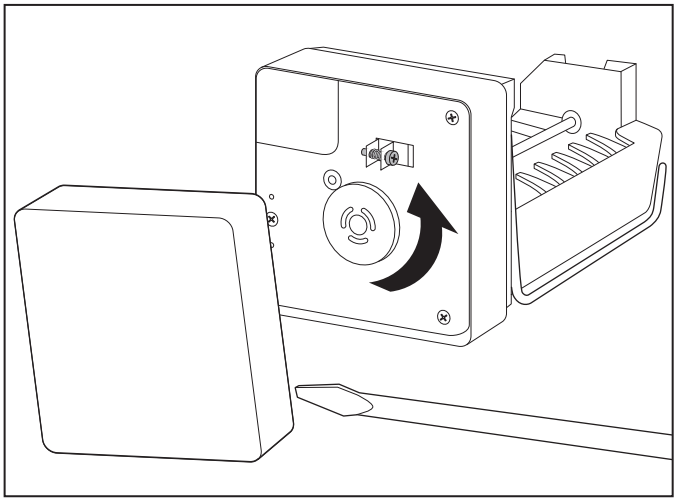

23 Removing the Ice Maker Cover

① Cover ② Plastic Gear

Remove the plastic cover on the front of the ice maker.

1. Turn the larger of the two plastic gears a half turn clockwise to force the ice maker to cycle.

   If the ice maker doesn't cycle, it may indicate a defective ice maker.

8.24 Replacing the Ice Maker

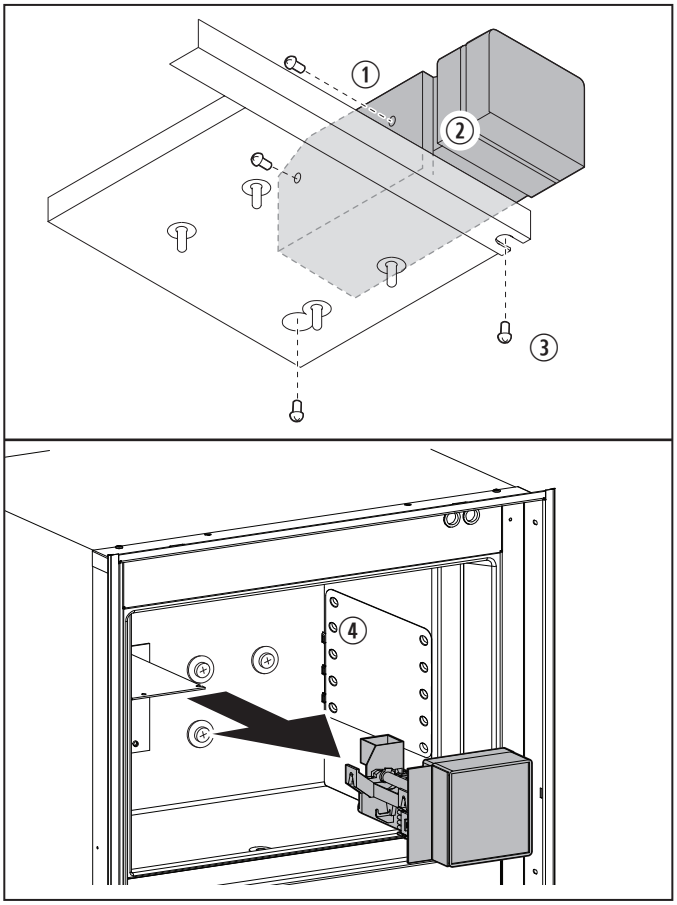

24 Removing the Ice Maker

① Screw ② Ice Maker

1. Disconnect the unit from all power sources (120 VAC and 12 VDC).
2. Disconnect the four-pin connector from the ice maker.
3. Remove the screws holding the ice maker in place.
4. Slide the defective ice maker out of the freezer compartment.
5. Perform these steps in reverse with the new ice maker to complete the replacement.

8.25 Testing the Interior Light Switch for Continuity

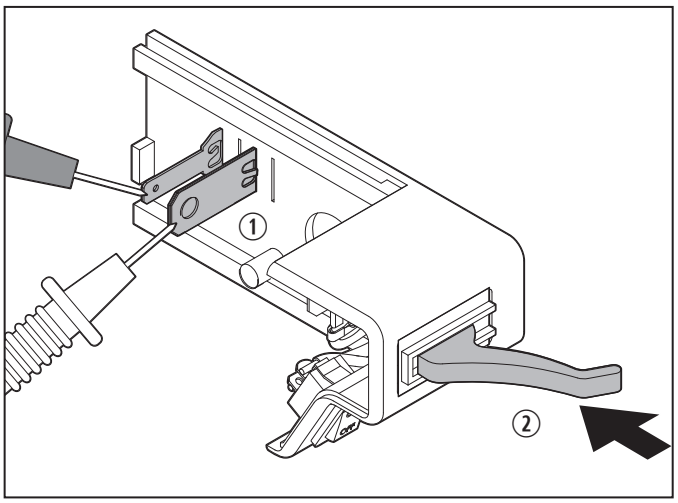

25 Testing the Interior Light Blades

① Blades ② Light Switch

1. Perform the steps in "Replacing the Interior Light" on page 42 to remove the light switch.
2. Set the multi-meter to the Ohms resistance setting.
3. Disconnect the wires from the switch.
4. Attach the leads of the multi-meter to the blades.
5. Depress the switch.

   The reading should show no continuity. If it shows continuity, it indicates a faulty switch.
6. Release the switch.

   The reading should show continuity. If it shows no continuity,it indicates a faulty switch.

Consult the operating manual for the multi-meter for specific device function.

8.26 Replacing the Interior Light

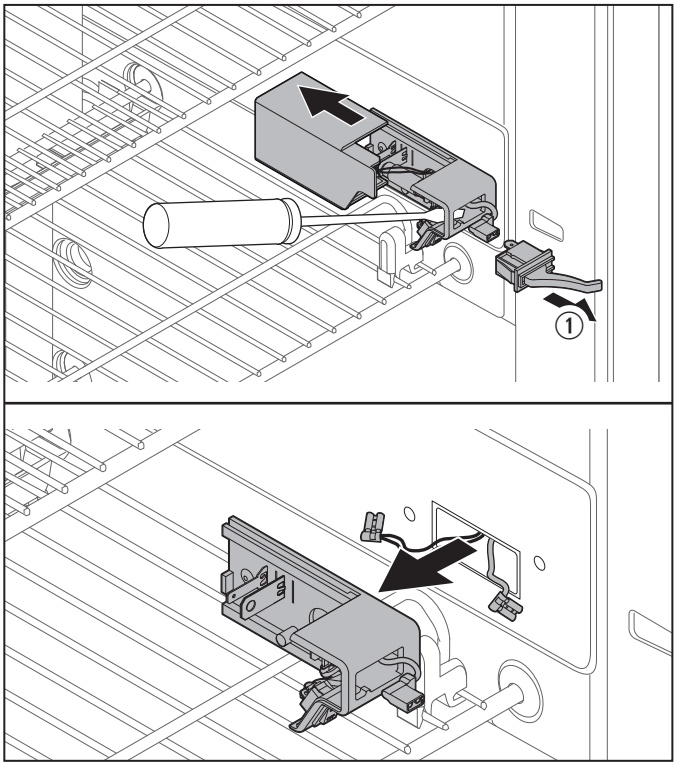

26 Removing the Interior Light Assembly

① Light Cover ③ Light Switch
② Light Bulb ④ Light Housing

The following steps may vary depending on the model and generation of the refrigerator.

1. Disconnect the unit from all power sources (120 VAC and 12 VDC).
2. Disconnect the lamp wiring from the lower control module.
3. Remove the light cover to access the light housing. Replace if needed.
4. Remove the screws securing the housing to the refrigerator liner. Replace if needed.
5. Remove the light bulb. Replace if needed.
6. Disconnect the wiring to the light switch. Replace if needed.
7. Perform these steps in reverse to complete the replacement.

8.27 Replacing the Orifice

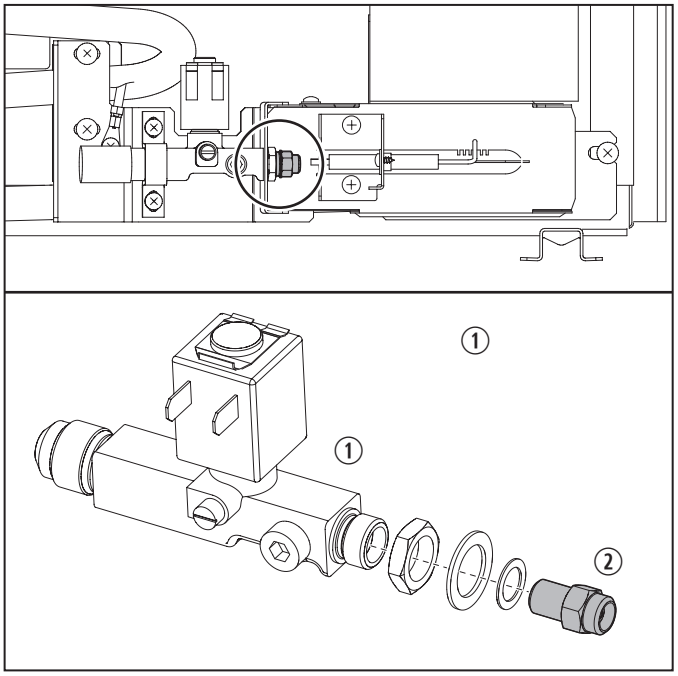

27 Removing the Orifice from the Gas Valve

① Gas Valve ② Orifice

1. Disconnect the unit from all power sources (120 VAC and 12 VDC).
2. Turn off the LP gas supply to the refrigerator.
3. Unscrew the orifice from the end of gas valve.
4. Remove the defective orifice.
5. Complete these steps in reverse with the new orifice to complete the replacement.
6. Verify there are no LP gas leaks. Refer to "Performing a Gas Leak Test" on page 31 for more details.

8.28 Replacing the Re-igniter

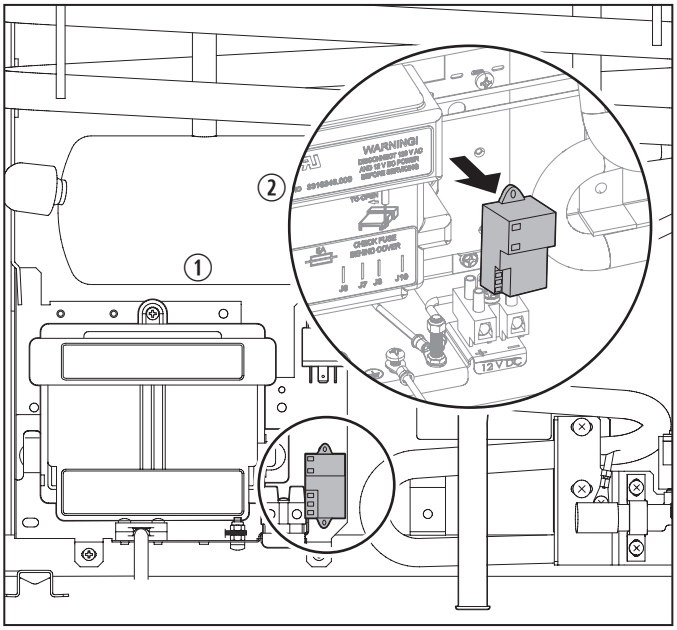

28 Removing the Re-igniter

① Re-igniter

On some models, the re-igniter is integrated into the lower control module and the entire module must be replaced. Always use the product number to acquire the correct part.

1. Disconnect the unit from all power sources (120 VAC and 12 VDC).
2. Locate and remove the screw securing the re-igniter cover to the refrigerator wall.
3. Disconnect the re-igniter from the lower control module and the electrode.
4. Remove the defective re-igniter.
5. Perform these steps in reverse with a new re-igniter to complete the replacement.

8.29 Testing the Relay for Continuity (RM1350 Model Only)

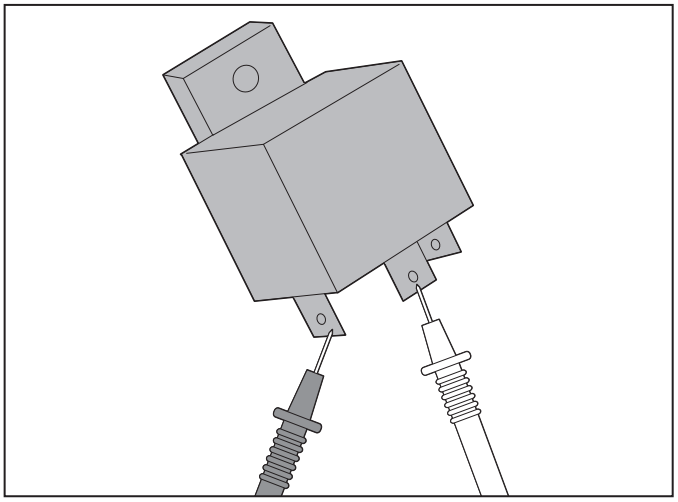

29 Testing the Relay

① Terminals

1. Perform the steps in "Replacing the Relay (RM1350 Model Only)" on page 44 to access the relay.
2. Attach the leads of the multi-meter to terminal 85 and the chassis ground.

   The reading should show no continuity. If it shows continuity, it indicates a short to ground.
3. Attach the leads of the multi-meter to terminal 30 and terminal 87.

   The reading should show continuity. If it shows no continuity, it indicates a faulty relay.

Consult the operating manual for the multi-meter for specific device function.

8.30 Replacing the Relay (RM1350 Model Only)

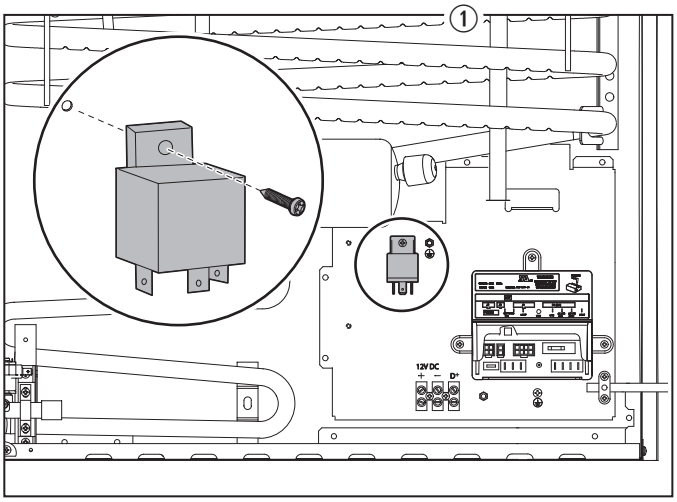

30 Removing the Relay from the Refrigerator

① Relay ② Screw

1. Disconnect the unit from all power sources (120 VAC and 12 VDC).
2. Disconnect the wiring from the relay. Make note of where the wires connect.
3. Remove the screw securing the relay to the refrigerator wall.
4. Remove the defective relay.
5. Perform these steps in reverse with the new relay to complete the replacement.

8.31 Testing the Thermal Fuse for Continuity

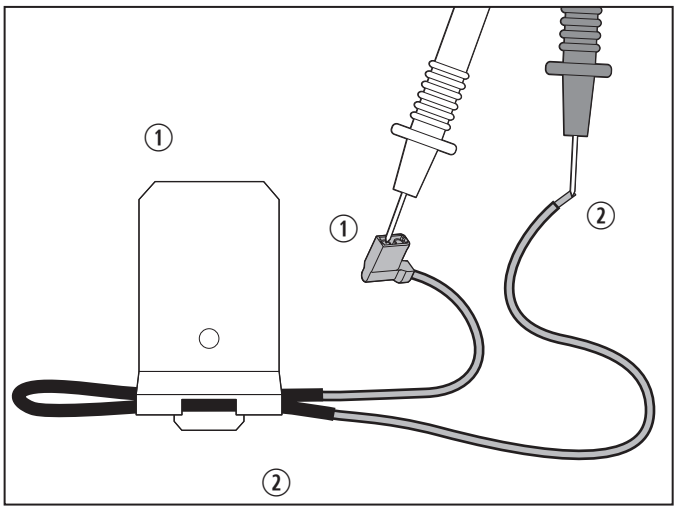

31 Testing the Thermal Fuse Connector and Wire End

① Connector ② Wire End

1. Perform the steps in "Replacing the Thermal Fuse" on page 45 to remove the thermal fuse.
2. Attach one lead of the multi-meter to the connector and one to the end of the wire.

   The reading should show continuity. If it shows no continuity, it indicates a blown fuse.

Consult the operating manual for the multi-meter for specific device function.

8.32 Replacing the Thermal Fuse

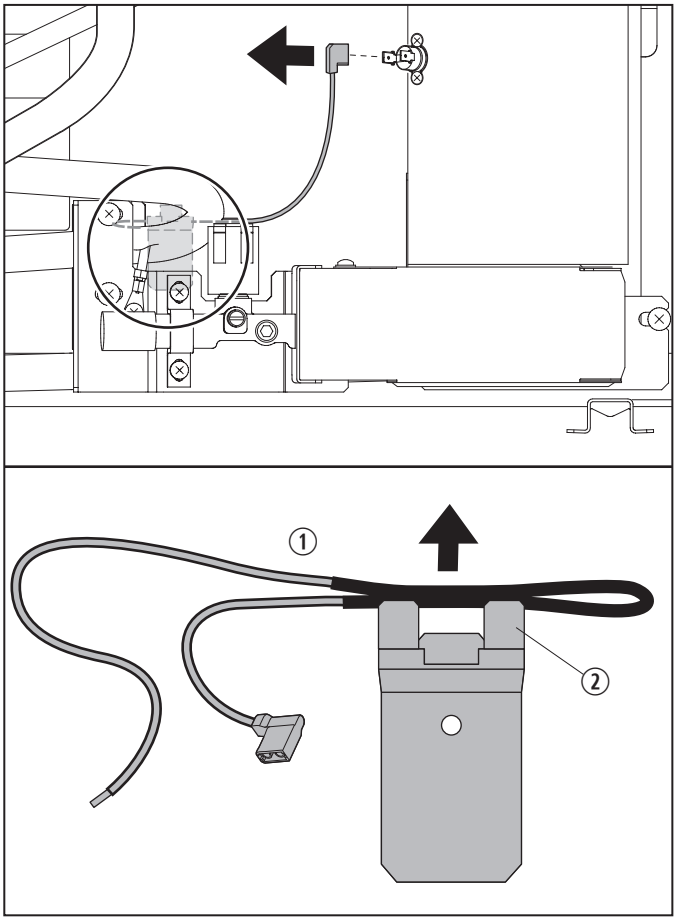

32 Removing the Thermal Fuse

① Thermal Fuse ② Tabs

1. Disconnect the unit from all power sources (120 VAC and 12 VDC).
2. What is the model of the refrigerator?
   - Americana, disconnect the thermal fuse from the 12 VDC terminal block and one leg of the thermo fuse.
   - New Generation, first generation DMR702, and DMR702-D, disconnect the thermal fuse from the lower control module and one leg of the thermo fuse.
3. Carefully bend the tabs holding the thermal fuse in place.
4. Remove the defective thermal fuse.
5. Complete these steps in reverse order with the new thermal fuse to complete the replacement.

8.33 Testing the Thermistor for Resistance

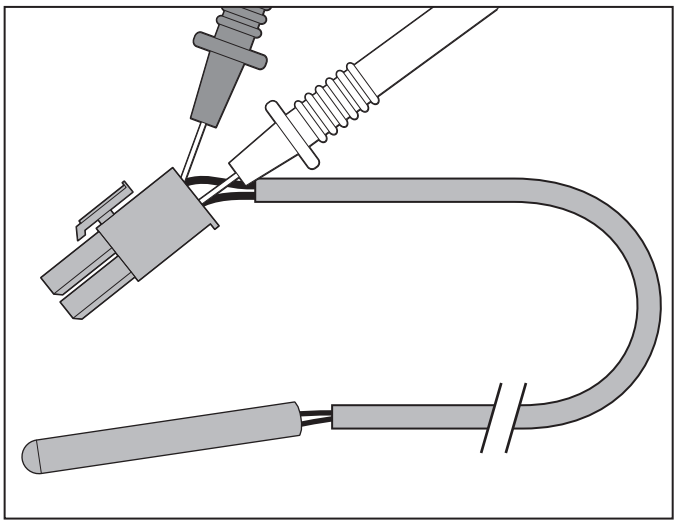

33 Testing the Thermistor Leads

① Leads ② Thermistor

1. Perform the steps in "Replacing the Thermistor" on page 46 to remove the thermistor.
2. Set the multi-meter to the Ohms resistance setting.
3. Submerge the thermistor in a glass of 34°F (1°C) water for 10 minutes.
4. Attach the leads of the multi-meter to the thermistor leads.

   The reading should be between 8000–10,000 Ohms. If the reading is out of specification, it indicates a faulty thermistor.

Consult the operating manual for the multi-meter for specific device function.

8.34 Testing the Thermistor for Continuity

1. Perform the steps in "Replacing the Thermistor" on page 46 to remove the thermistor.
2. Attach one lead of the multi-meter to a pin on the thermistor wire and the other lead to the chassis ground.

   The reading should show no continuity. If it shows continuity, it indicates a short to ground.
3. Repeat the continuity test on the second pin of the thermistor wire.

Consult the operating manual for the multi-meter for specific device function.

8.35 Replacing the Thermistor

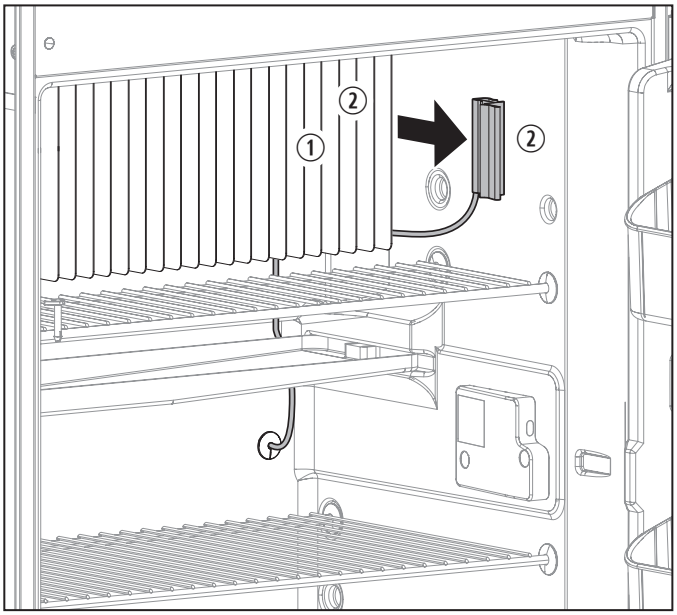

34 Removing the Thermistor from the Cooling Fins

① Cooling Fins ② Thermistor

DMR702 models only: the thermistor cannot be replaced. The only option is to replace the refrigerator.

1. Disconnect the unit from all power sources (120 VAC and 12 VDC).
2. Unplug the thermistor from the lower control module (P2).
3. Remove the thermistor from the clip on the interior of the refrigerator.

The location of the thermistor may vary depending on the model of the refrigerator.

4. Pull the defective thermistor through the opening in the refrigerator.

Use putty to seal any openings created during the replacement process

5. Perform these steps in reverse with the new thermistor to complete the replacement.

8.36 Replacing the Thermocouple

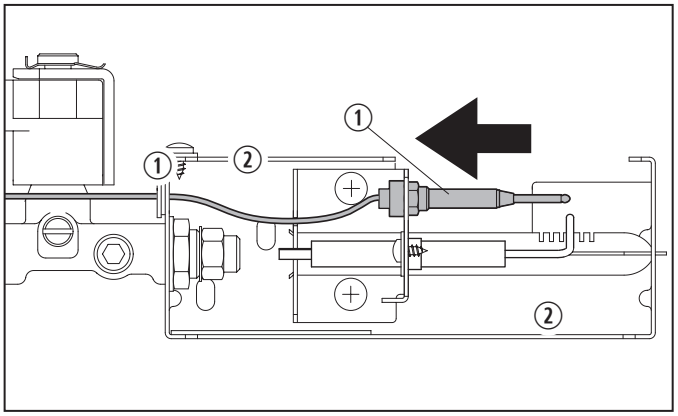

35 Removing the Thermocouple from the Burner Housing

① Thermocouple ② Burner Housing

1. Disconnect the unit from all power sources (120 VAC and 12 VDC).
2. Turn off the LP gas supply to the refrigerator.
3. Remove the shielding around the burner housing to access the thermocouple.
4. Remove the thermocouple leads from the re-igniter and the lower control module.
5. Remove the nut securing the thermocouple to the burner housing.
6. Remove the defective thermocouple.
7. Perform these steps in reverse with the new thermocouple to complete the replacement.
8. Verify there are no LP gas leaks. Refer to "Performing a Gas Leak Test" on page 31 for more details.

8.37 Testing the Thermo Fuse for Continuity (Americana Models Only)

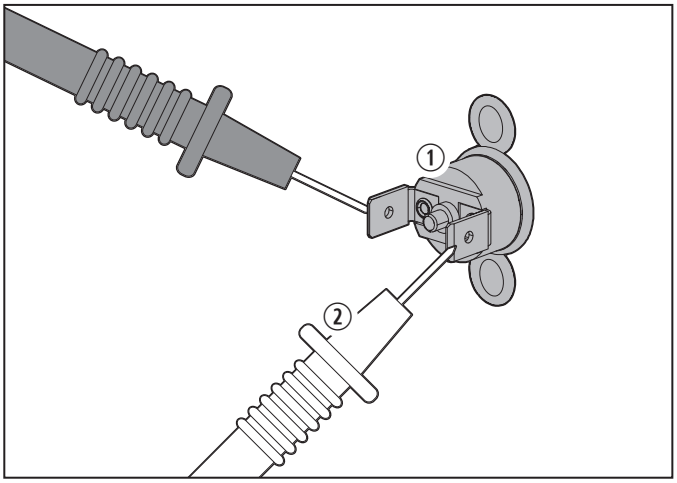

36 Testing the Thermo Fuse Blades

① Thermo Fuse ② Blades

1. Perform the steps in "Replacing the Thermo Fuse (Americana Models Only)" on page 48 to disconnect the wiring from the thermo fuse.
2. Attach the one lead of the multi-meter to each blade of the thermo fuse.

   The reading should show continuity.
3. If the reading shows no continuity, reset the thermo fuse by pressing the center button.
4. Retest for continuity.

   If the reading shows no continuity, it indicates a blown fuse.

Consult the operating manual for the multi-meter for specific device function.

8.38 Replacing the Thermo Fuse (Americana Models Only)

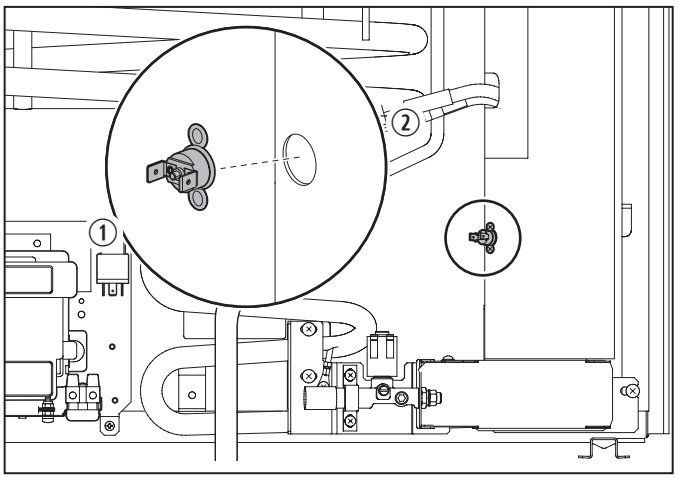

37 Removing the Thermo Fuse

① Thermo Fuse ② Flue Stack

1. Disconnect the unit from all power sources (120 VAC and 12 VDC).
2. Disconnect the wires to the thermo fuse.
3. Remove the screws/rivets securing the thermo fuse to the flue stack.
4. Remove the defective thermo fuse.
5. Perform these steps in reverse to complete the replacement.

8.39 Testing the Thermofuse for Continuity (New Generation Models Only)

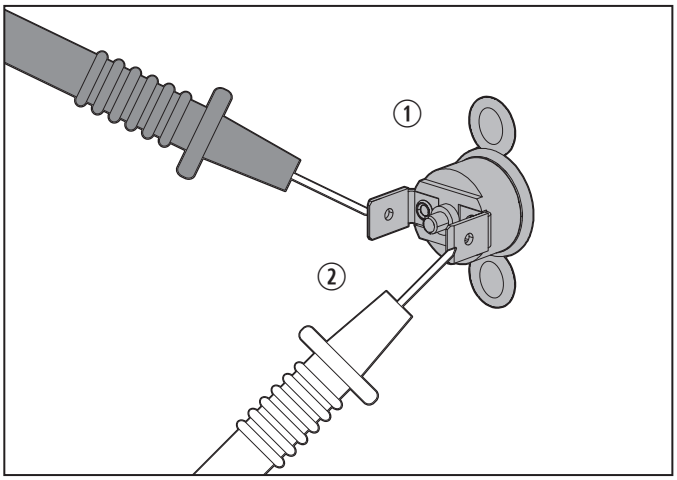

38 Testing the Thermofuse Blades

① Thermofuse ② Blades

1. Perform the steps in "Replacing the Thermofuse (New Generation Models Only)" on page 49 to disconnect the wiring from the thermofuse.
2. Attach the one lead of the multi-meter to each blade of the thermofuse.

   The reading should show continuity.
3. If the reading shows no continuity, reset the thermofuse by pressing the center button.
4. Retest for continuity.

   If the reading shows no continuity after the reset, it indicates a blown fuse.

Consult the operating manual for the multi-meter for specific device function.

8.40 Replacing the Thermofuse (New Generation Models Only)

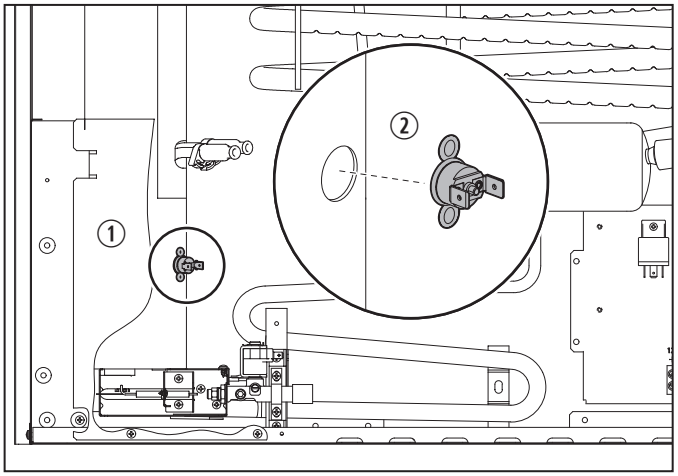

39 Removing the Thermofuse

① Flue Stack ② Thermofuse

1. Disconnect the unit from all power sources (120 VAC and 12 VDC).
2. Disconnect the wires to the thermofuse.
3. Remove the screws/rivets securing the thermofuse to the flue stack.
4. Remove the defective thermofuse.
5. Complete steps in reverse with a new thermofuse to complete the replacement.

8.41 Replacing the Upper Control Module

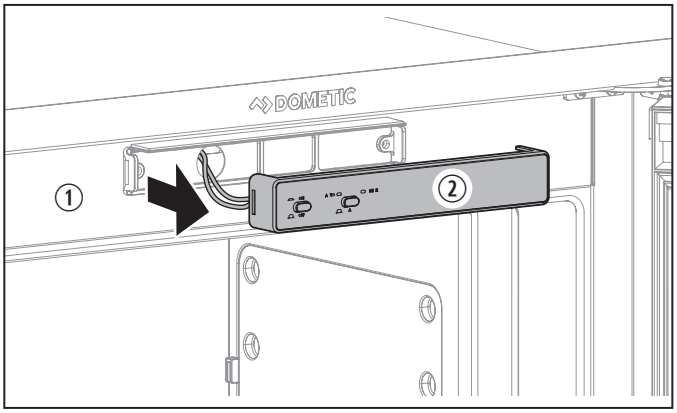

40 Removing the Upper Control Module

① Housing ② Upper Control Module

1. Disconnect the unit from all power sources (120 VAC and 12 VDC).
2. Remove the upper control module from the upper housing.
3. Disconnect the communication wire harness.
4. Perform these steps in reverse with the new control module to complete the replacement.

8.42 Replacing the Upper Control Module Circuit Board (DM2652, 2852 only)

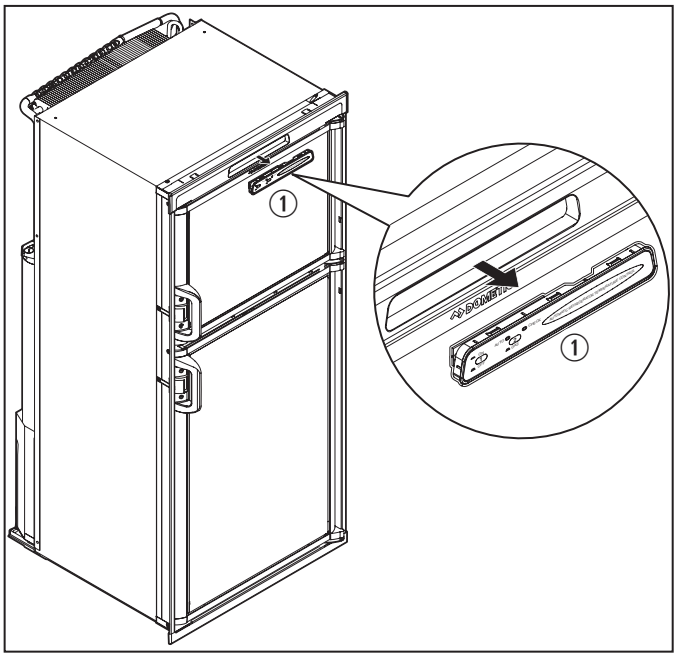

41 Removing the Control Interface Display

① Control Interface Display

1. Disconnect the unit from all power sources (120 VAC and 12 VDC).
2. Using your fingertips, pull the control interface display free of the refrigerator.

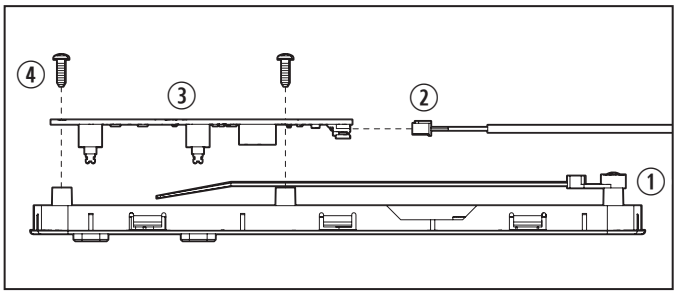

42 Removing the Circuit Board

① Control Interface Display
② 5-pin Connector
③ Circuit Board
④ Screw

3. Unplug the 5-pin connector located at the end of the circuit board by gently pulling on the connector. Do not pull on the wires.
4. Remove the two screws attaching the circuit board to the control interface display. Retain the screws.
5. Use your fingertips to pull out the existing circuit board.
6. Position the replacement circuit board with the lights facing the control interface display and the screw holes aligned.
7. Secure the circuit board using the retained screws. Do not over-tighten.
8. Gently plug in the 5-pin connector.
9. Push the control interface display into its original position on the refrigerator.
10. Connect the refrigerator to its power sources.

8.43 Replacing the Ventilator Fan

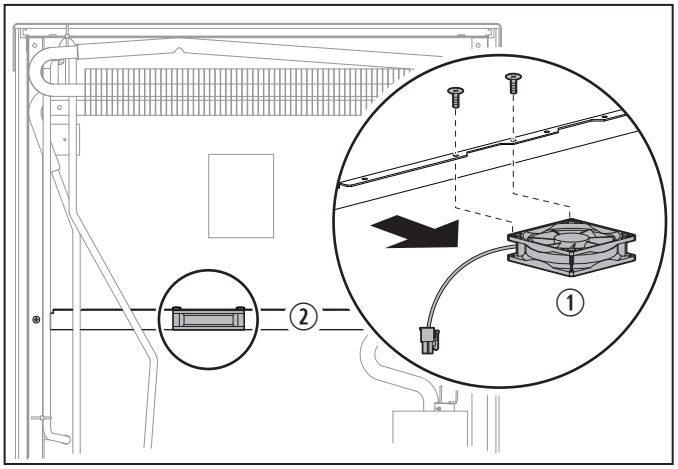

43 Removing the Ventilator Fan from the Mounting Bracket

① Ventilator Fan ② Mounting Bracket

The location of the ventilator fan may vary depending on model and installer.

1. Disconnect the unit from all power sources (120 VAC and 12 VDC).
2. Refer to the steps "Removing the Refrigerator from an Enclosure" on page 31 if it is necessary to remove the refrigerator to access the fan.
3. Locate the ventilator fan on the rear of the refrigerator.
4. Disconnect the wiring to the fan.
5. Remove the screws securing the fan to the mounting bracket.
6. Remove the defective fan from the rear of the refrigerator.
7. Perform these steps in reverse with the new ventilator fan to complete the replacement.

8.44 Replacing the Ventilator Fan Switch

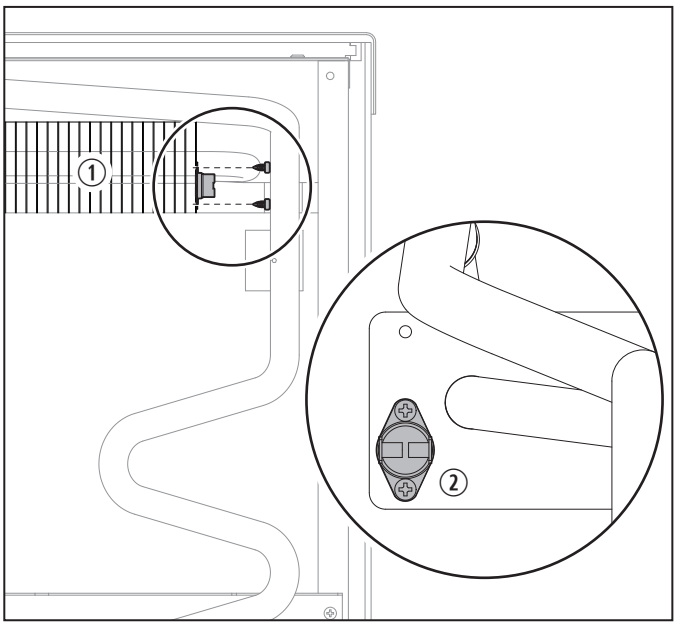

44 Removing the Ventilator Fan Switch

① Cooling Fins ② Fan Switch

The location of the ventilator fan switch may vary depending on model and installer.

1. Perform the steps in "Replacing the Upper Control Module Circuit Board (DM2652, 2852 only)" on page 50 to access the fan switch.
2. Disconnect the wiring from the fan switch.
3. Remove the screws securing the fan switch to the fin.
4. Remove the defective fan switch from the rear of the refrigerator.
5. Perform these steps in reverse with the new fan switch to complete the replacement.

8.45 Testing the Water Valve for Resistance

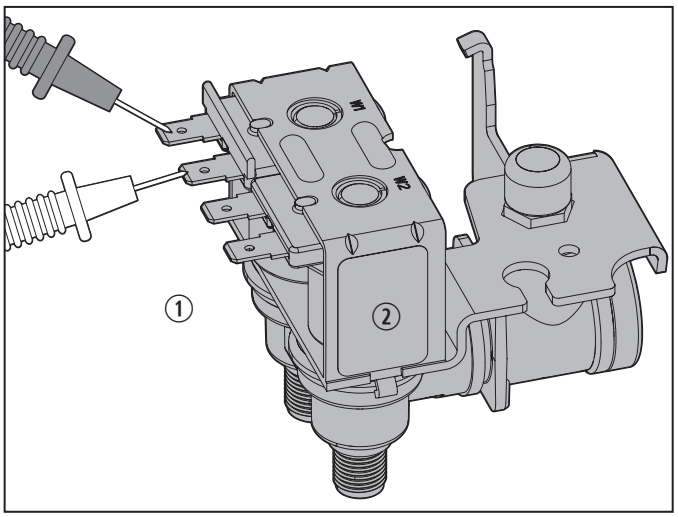

45 Testing the Water Valve Blades

① Blades ② Water Valve

1. Perform the steps in "Replacing the Water Valve" on page 52 to remove the water valve.
2. Set the multi-meter to the Ohms resistance setting.
3. Attach the leads of the multi-meter to each blade pair of the water valve.

   The reading should be between 200–500 Ohms. If the reading is out of specification, it indicates a faulty water valve solenoid.

Consult the operating manual for the multi-meter for specific device function.

8.46 Replacing the Water Valve

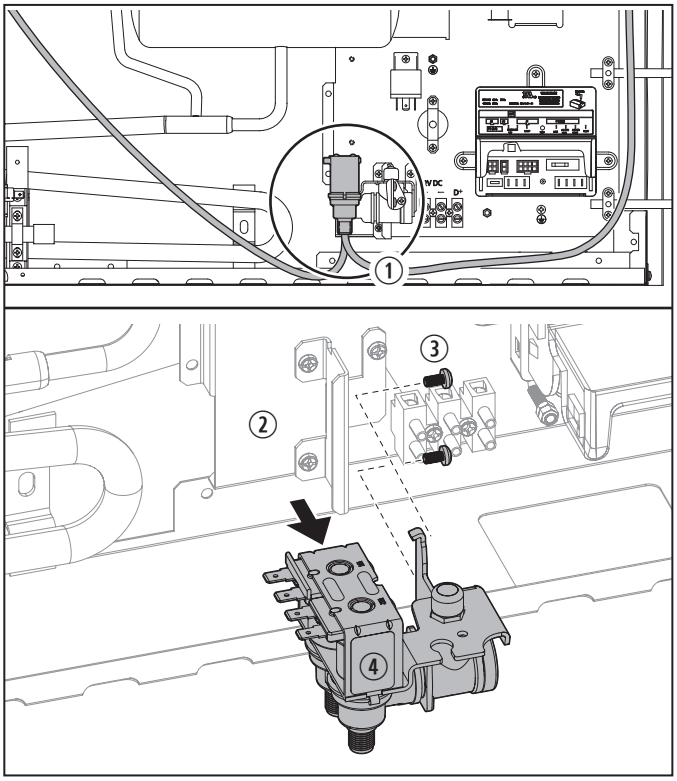

46 Disconnecting the Water Valve

① Water Lines ③ Screws
② Mounting Bracket ④ Water Valve

1. Disconnect the unit from all power sources (120 VAC and 12 VDC).
2. Shut off the water supply to the refrigerator.
3. Disconnect the wires to the water valve.
4. Disconnect the water line to the ice maker.
5. Remove the screws securing the water valve to the mounting bracket.
6. Remove the defective water valve.
7. Perform these steps in reverse with the new water valve to complete the replacement.

9 Disposal

Place the packaging material in the appropriate recycling waste bins, whenever possible. Consult a local recycling center or specialist dealer for details about how to dispose of the product in accordance with all applicable national and local regulations.

10 Replacement Parts

For the most current parts information, visit www.dometic.com.

DOMETIC

dometic.com

YOUR LOCAL DEALER

dometic.com/dealer

YOUR LOCAL SUPPORT

dometic.com/contact

YOUR LOCAL SALES OFFICE

dometic.com/sales-offices