FRONT RUNNER

LAND ROVER DEFENDER 110 L663
SLIMLINE 3 FULL LENGTH MOUNTING SYSTEM

ENG

MSLD001

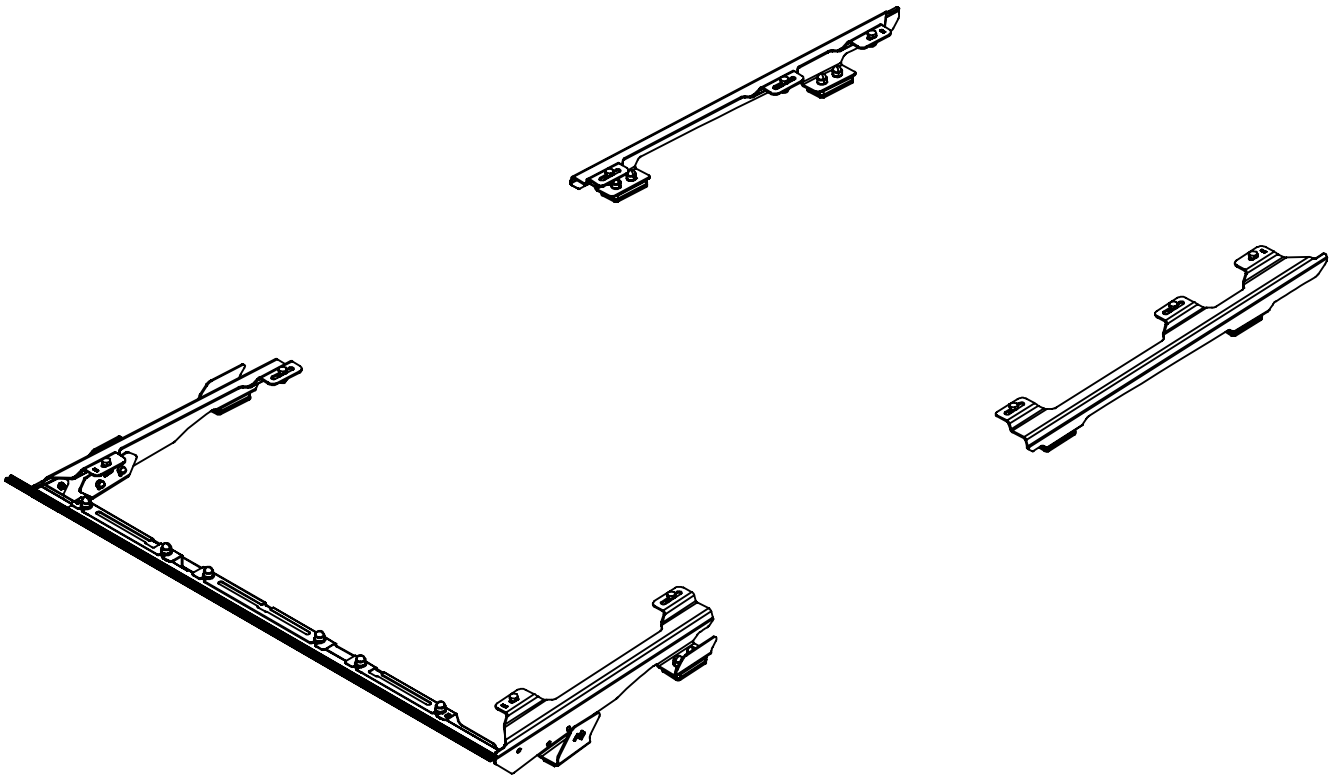

READ ME ! ⚠

Thank you for purchasing a Land Rover Defender 110 L663 Slimline 3 Full Length Mounting System.

Before you start, take a moment to familiarize yourself with the Fitting Instructions and the included components.

Refer to Page 2 for a list of all the components, quantities and tools required.

IMPORTANT! SCAN QR CODE BELOW FOR FITTING AND ASSEMBLY INSTRUCTIONS

We respect the environment.
Our fitting instructions will no longer be printed in full.
Download the complete instructions by scanning this QR code.
Should you have issues scanning contact
info@frontrunneroutfitters.com

SCAN ME!

Front Runner will not be responsible for any damage caused by the failure to install the product correctly.
Please contact us on info@frontrunneroutfitters.com if you have any questions regarding the installation of this product.

© 2026 FRONT RUNNER VEHICLE OUTFITTERS