DOMETIC

MOBILE COOLING CFX 3

CFX 3 25, CFX 3 35, CFX 3 45, CFX 3 55, CFX 3 55IM, CFX 3 75DZ, CFX 3 95DZ

EN

Compressor Cooler

Operating manual

© 2020 Dometic Group. The visual appearance of the contents of this manual is protected by copyright and design law. The underlying technical design and the products contained herein may be protected by design, patent or be patent pending. The trademarks mentioned in this manual belong to Dometic Sweden AB. All rights are reserved.

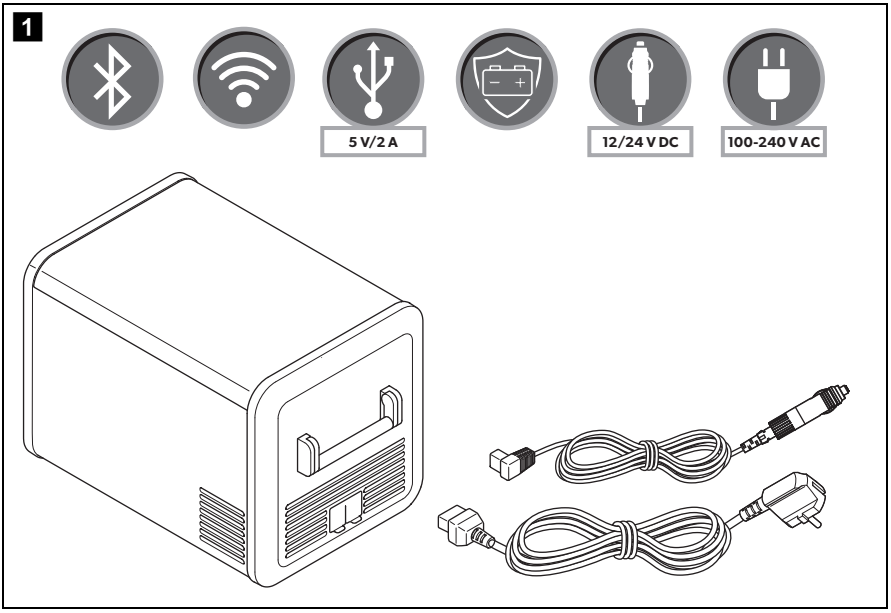
1
5 V/2 A
12/24 V DC
100-240 V AC

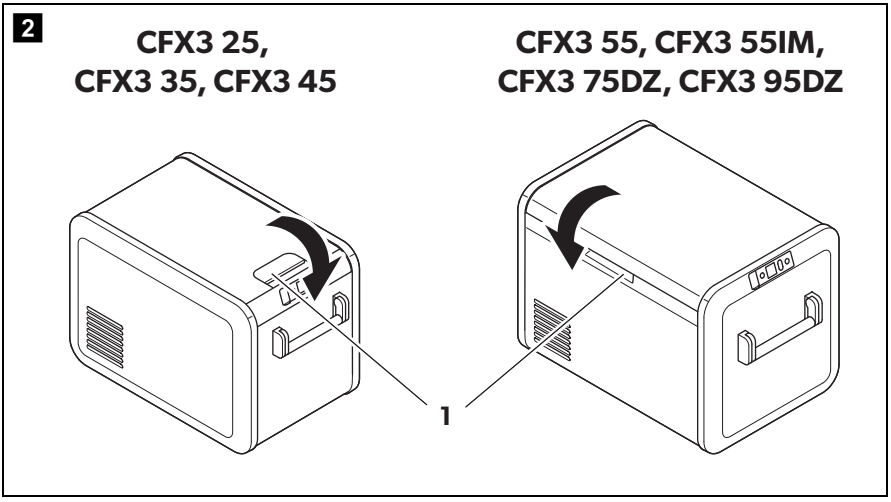
2
CFX3 25,
CFX3 35, CFX3 45
CFX3 55, CFX3 55IM,
CFX3 75DZ, CFX3 95DZ
1

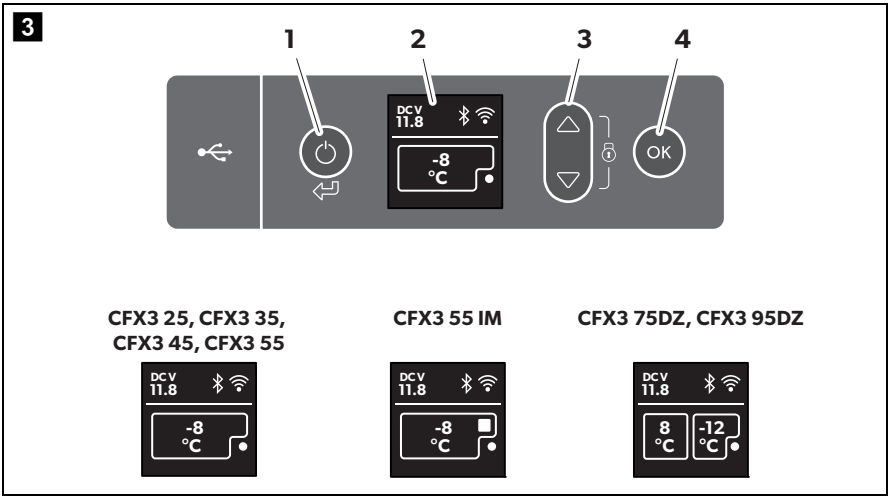
3
1
2
3
4
DC V
11.8
-8
°C
OK
CFX3 25, CFX3 35,
CFX3 45, CFX3 55
CFX3 55 IM
CFX3 75DZ, CFX3 95DZ
DC V
11.8
-8
°C
DC V
11.8
-8
°C
DC V
11.8
8
°C
-12
°C

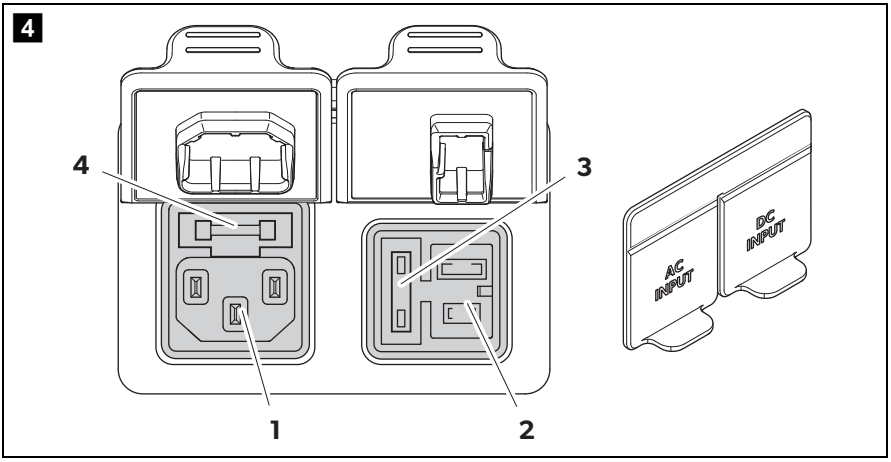
4
4
3
1
2
AC
INPUT
DC
INPUT

5

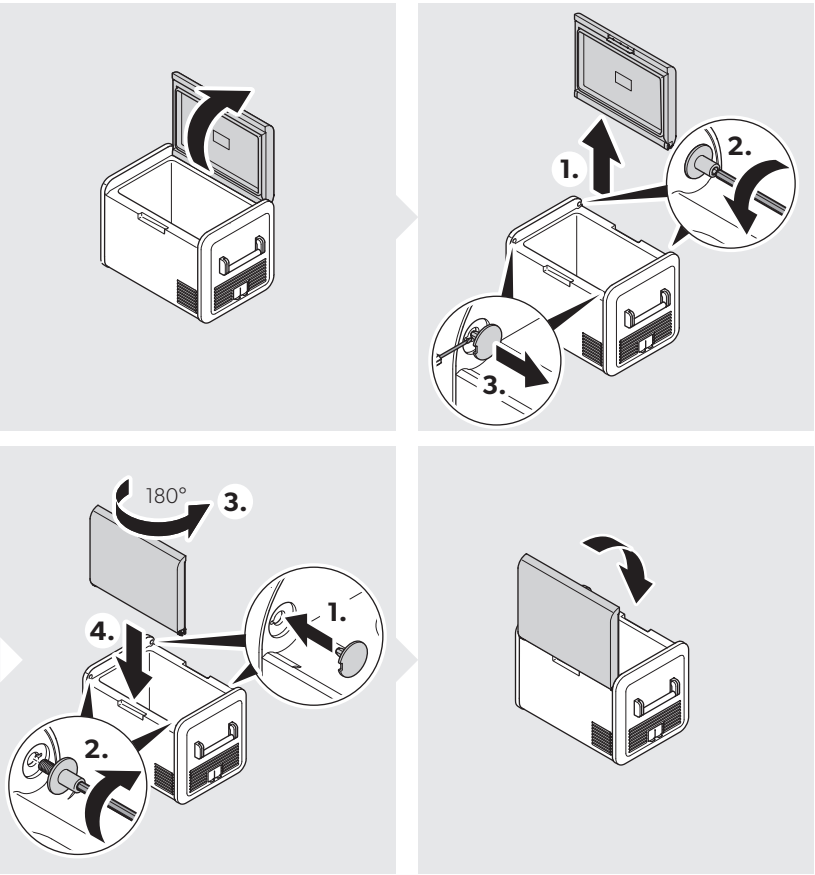

6

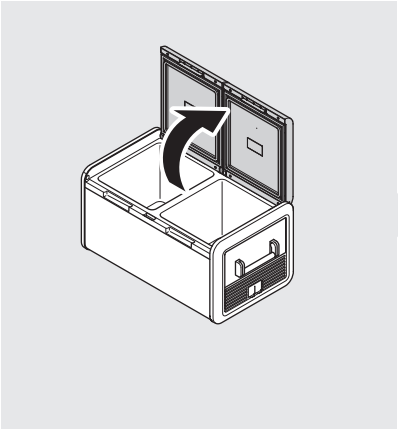

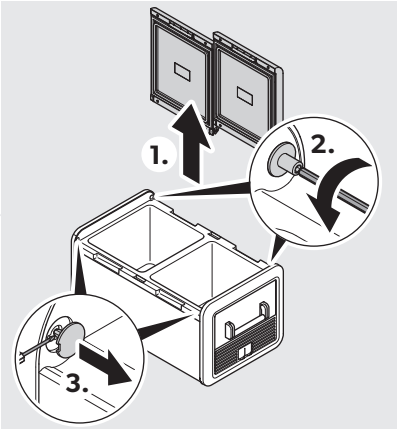

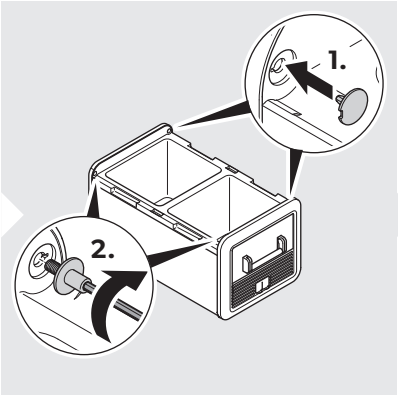

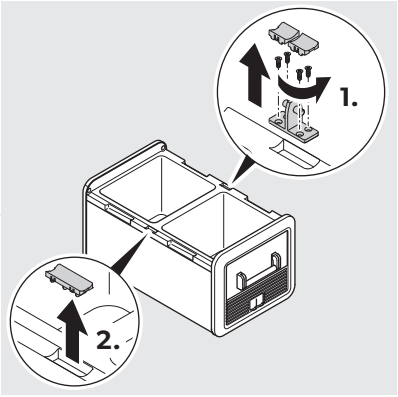

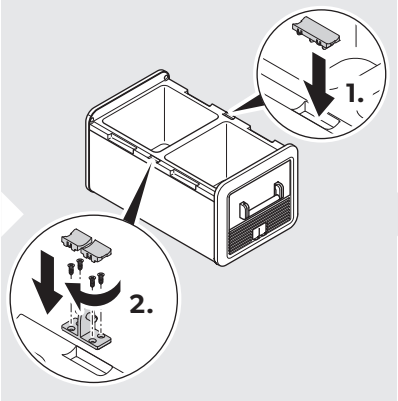

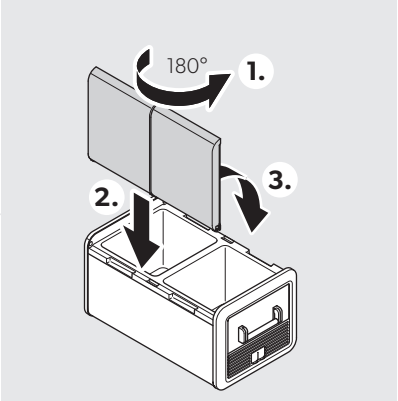

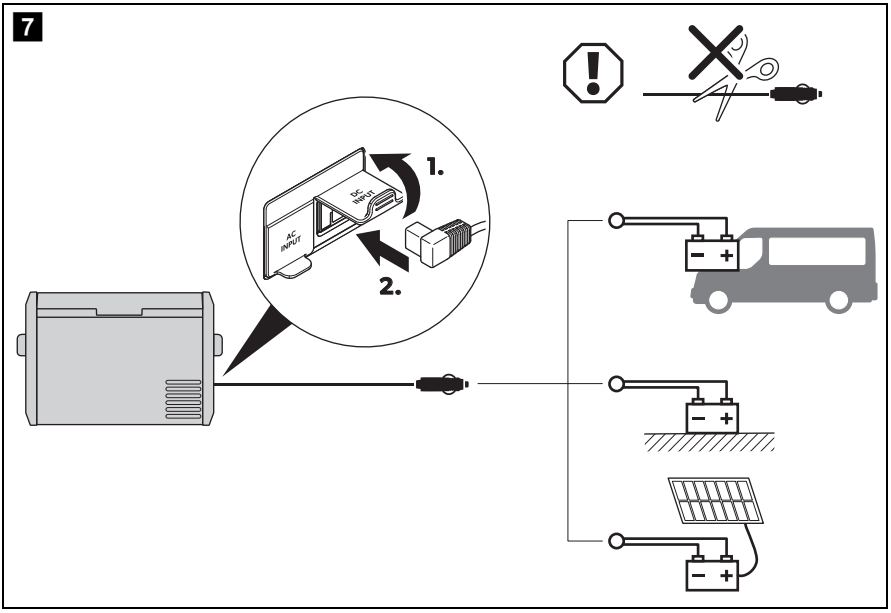
7
1.
2.
AC INPUT
DC INPUT

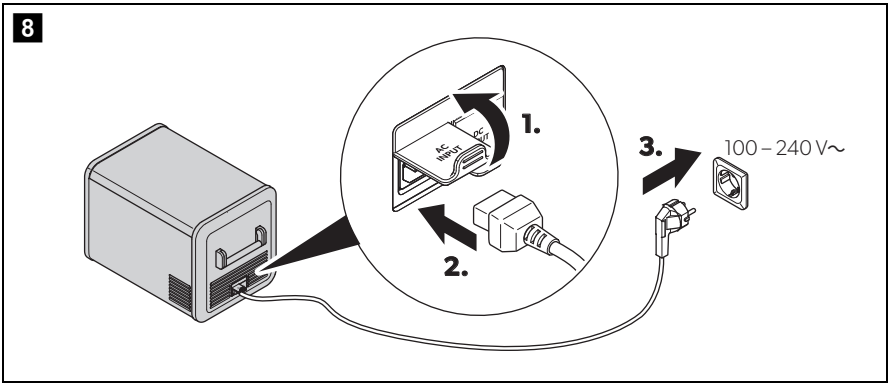
8
1.
2.
3.
100 – 240 V~
AC INPUT
DC INPUT

9

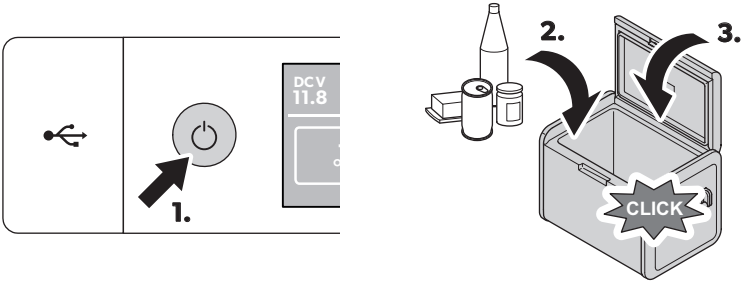
DC V
11.8
1.
2.
3.
CLICK

10

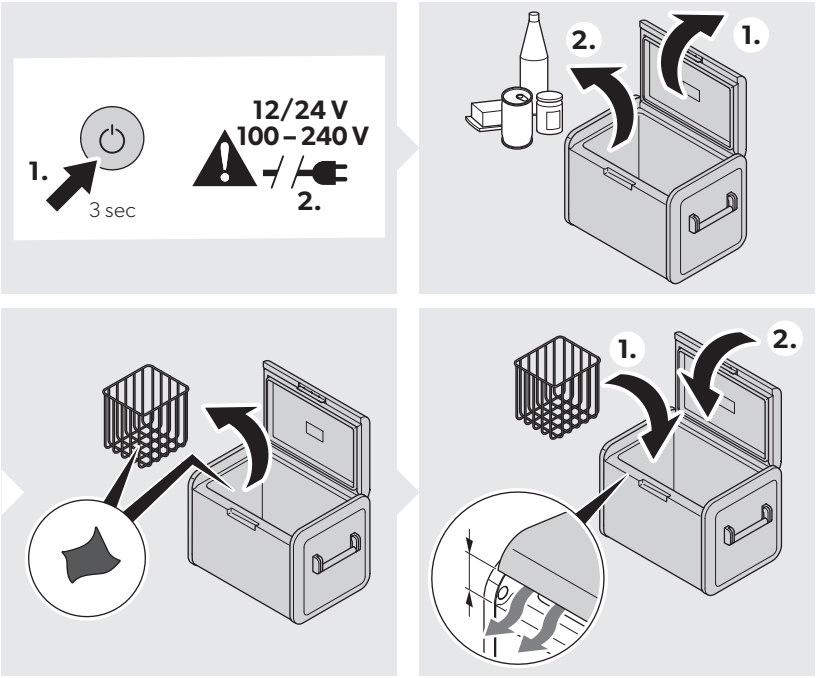
1.
3 sec
12/24 V
100 – 240 V
2.
2.
1.
1.
2.

11

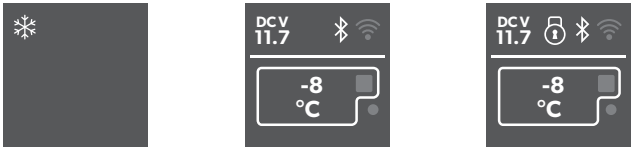
A
B
C
DC V
11.7
-8
°C
DC V
11.7
-8
°C

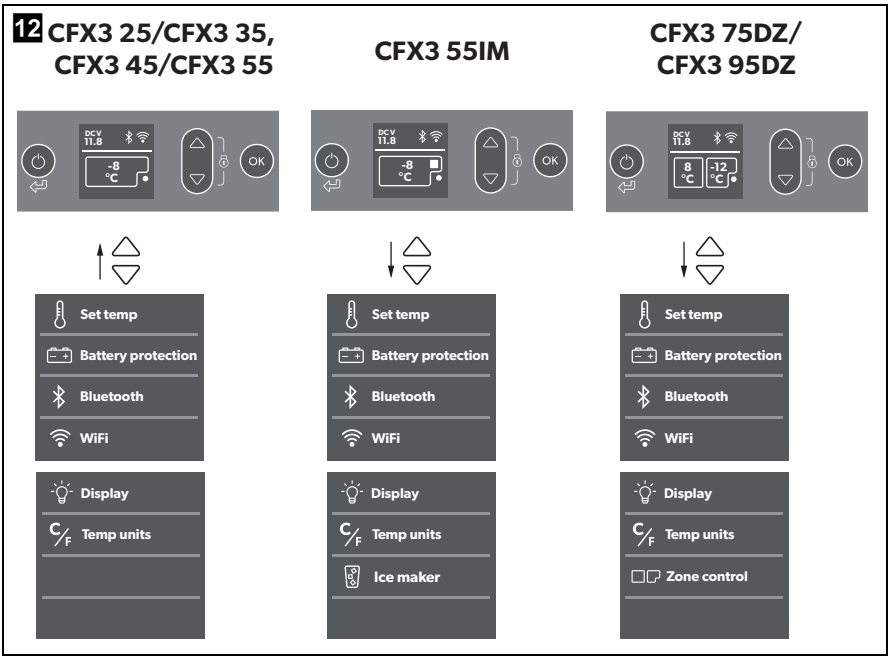
12
CFX3 25/CFX3 35, CFX3 45/CFX3 55
CFX3 55IM
CFX3 75DZ/ CFX3 95DZ
DC V 11.8
-8 °C
8 °C
-12 °C
OK
Set temp
Battery protection
Bluetooth
WiFi
Display
Temp units
Ice maker
Zone control

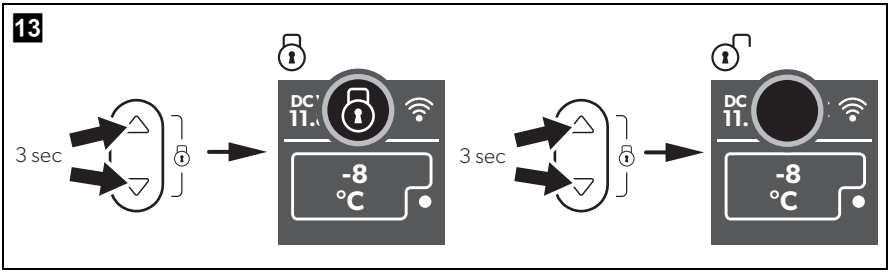
13
3 sec
3 sec
-8 °C

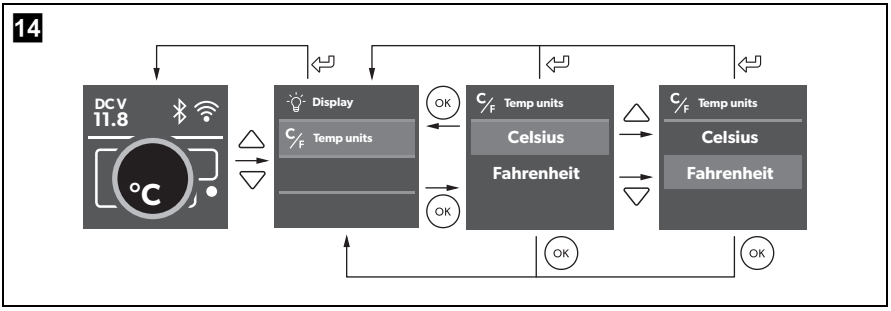
14
DC V 11.8
°C
Display
Temp units
OK
Celsius
Fahrenheit

15

CFX3 25/CFX3 35/CFX3 45/CFX3 55/CFX3 55IM

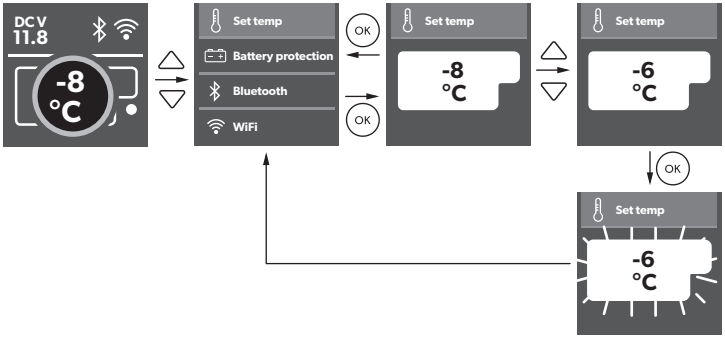

CFX3 75DZ/CFX3 95DZ

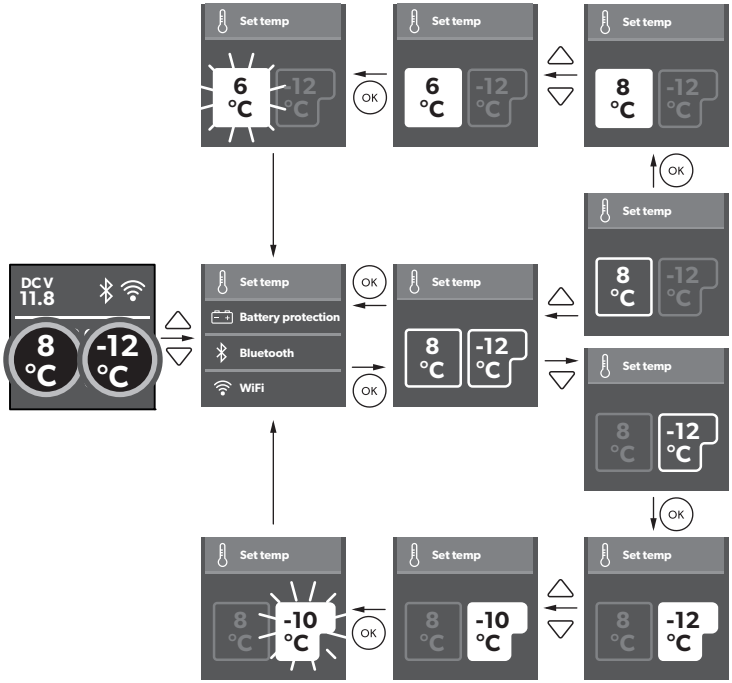

16

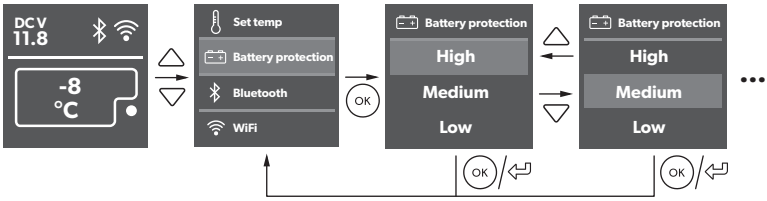

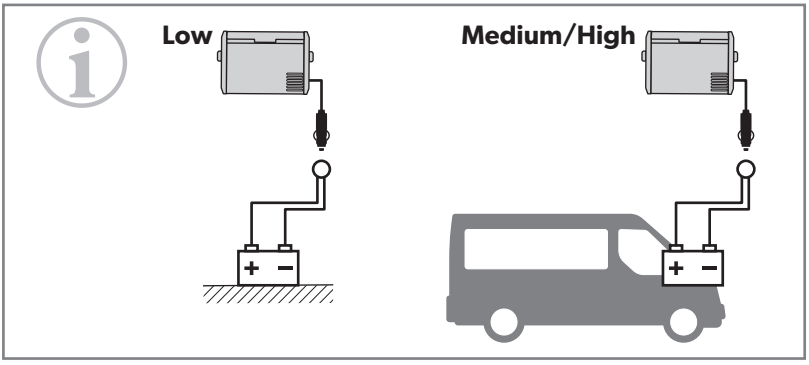

		Low	Medium	High
12 V	OFF	10.1 V	11.2 V	11.8 V
	ON	11.4 V	12.2 V	12.6 V
24 V	OFF	21.5 V	24.1 V	24.6 V
	ON	23.0 V	25.3 V	26.2 V

17

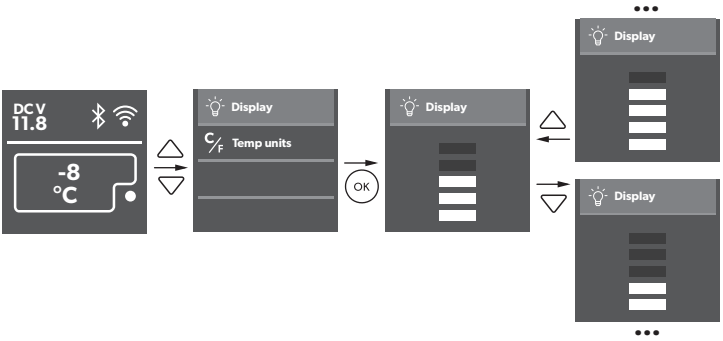

18

CFX3 75DZ/CFX3 95DZ

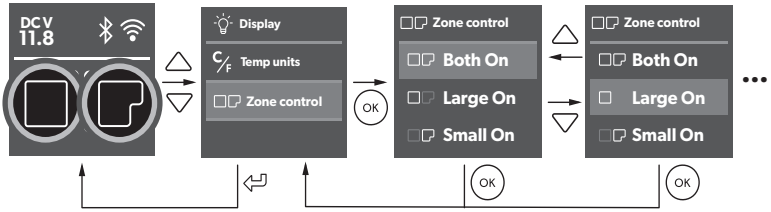

19

CFX3 55 IM

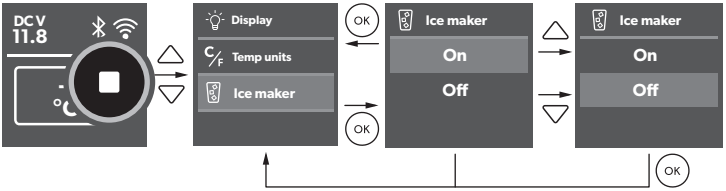

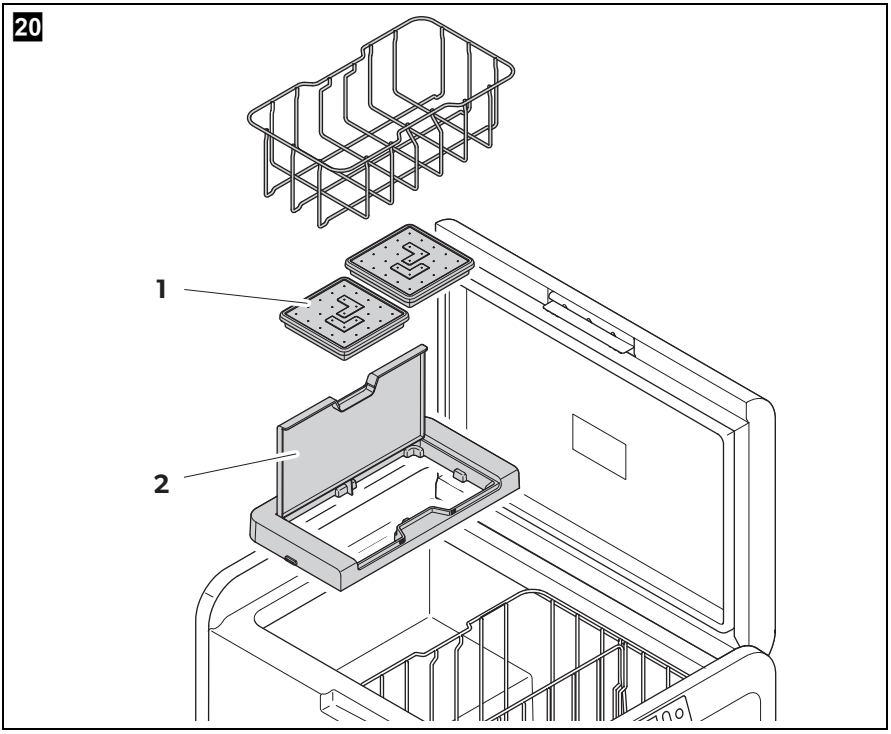
20
1
2

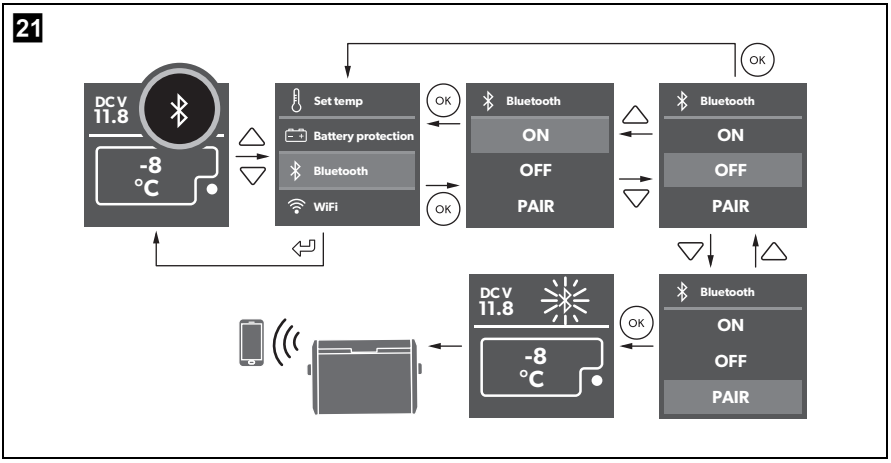
21
DC V
11.8
-8
°C
Set temp
Battery protection
Bluetooth
WiFi
OK
Bluetooth
ON
OFF
PAIR
Bluetooth
ON
OFF
PAIR
Bluetooth
ON
OFF
PAIR
DC V
11.8
-8
°C

22

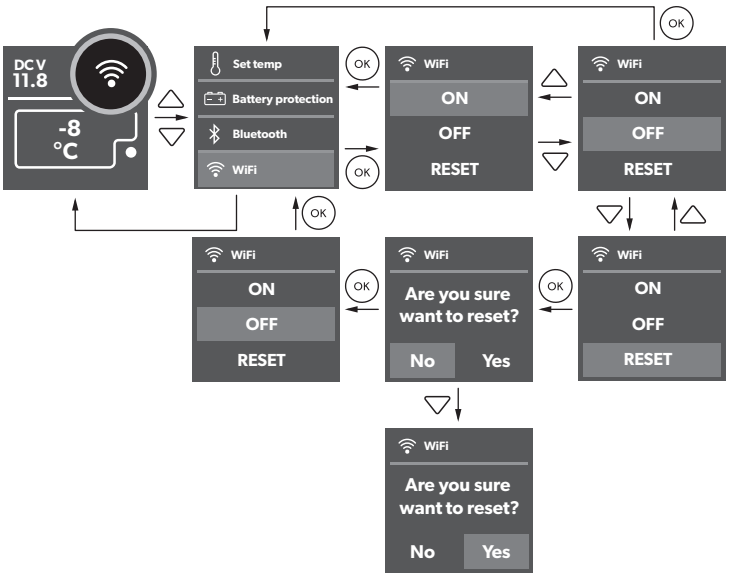
DC V
11.8
-8
°C
Set temp
Battery protection
Bluetooth
WiFi
OK
WiFi
ON
OFF
RESET
Are you sure
want to reset?
No
Yes

23

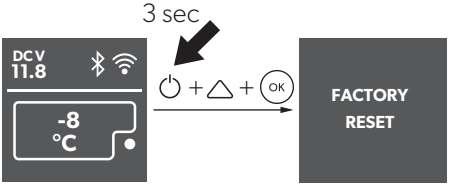
3 sec
DC V
11.8
-8
°C
OK
FACTORY
RESET

24

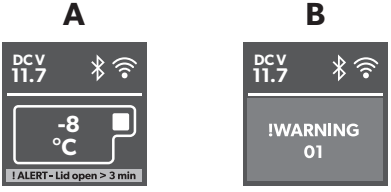
A
B
DC V
11.7
-8
°C
! ALERT - Lid open > 3 min
!WARNING
01

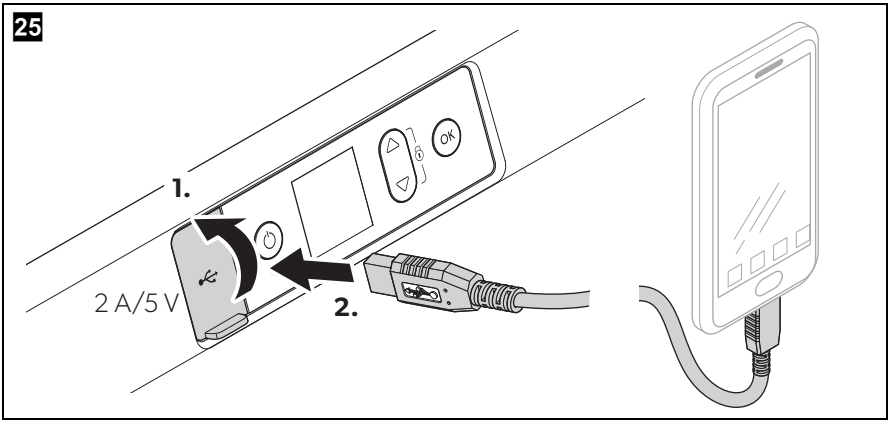
25
1.
2 A/5 V
2.
OK

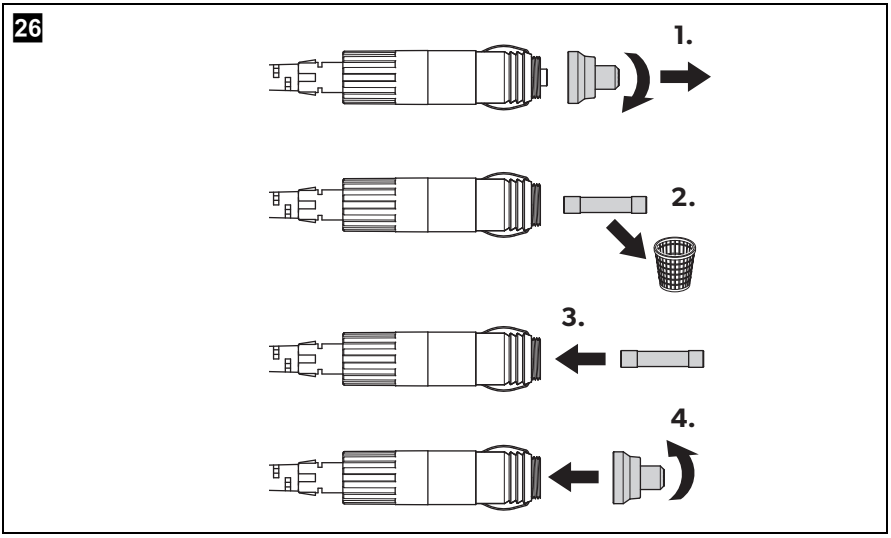
26
1.
2.
3.
4.

Please read this manual carefully before starting the device. Keep it in a safe place for future reference. If the device is passed on to another person, this manual must be handed over to the user along with it.

The manufacturer cannot be held liable for damage resulting from **improper usage** or **incorrect operation**.

Contents

1 Explanation of symbols 17

2 Safety instructions 18

3 Scope of delivery 20

4 Accessories 21

5 Intended use 22

6 Function description 23
- 6.1 Scope of functions 23
- 6.2 Operating and display elements 24

7 Operation 25
- 7.1 Before initial use 25
- 7.2 Energy saving tips 25
- 7.3 Reversing the lid opening direction 25
- 7.4 Connecting the cooler 26
- 7.5 Using the cooler 27
- 7.6 Using the display 27
- 7.7 Locking/unlocking the display 28
- 7.8 Selecting the temperature units 28
- 7.9 Setting the temperature 28
- 7.10 Using the battery protection 29
- 7.11 Setting the display's brightness 29
- 7.12 Switching on or off the compartments (only CFX3 75DZ, CFX3 95DZ) 29
- 7.13 Using the ice maker (only CFX3 55IM) 30
- 7.14 Downloading the CFX3 app 31
- 7.15 Setting the Bluetooth signal and connecting to the app 32
- 7.16 Setting the WiFi signal and connecting to the app 32
- 7.17 Changing CFX name and password in the app 32
- 7.18 Resetting the app password (WiFi only) 32

7.19 Resetting to factory settings 33
7.20 USB port for power supply 33
7.21 Defrosting the cooler 33
7.22 Replacing the AC fuse 34
7.23 Replacing the DC fuse 34
7.24 Replacing the DC plug fuse 34
7.25 Replacing the light PCB 34

8 Cleaning and maintenance 35

9 Troubleshooting 35

10 Warranty 38

11 Disposal 39

12 Technical data 39

1 Explanation of symbols

DANGER!
Safety instruction: Indicates a hazardous situation that, if not avoided, will result in death or serious injury.

WARNING!
Safety instruction: Indicates a hazardous situation that, if not avoided, could result in death or serious injury.

CAUTION!
Safety instruction: Indicates a hazardous situation that, if not avoided, could result in minor or moderate injury.

NOTICE!
Indicates a situation that, if not avoided, can result in property damage.

NOTE
Supplementary information for operating the product.

2 Safety instructions

WARNING! Failure to obey these warnings could result in death or serious injury.

Electrocution hazard

- Do not operate the cooling device if it is visibly damaged.
- If this cooling device's power cable is damaged, it must be replaced to prevent safety hazards.
- This cooling device may only be repaired by qualified personnel. Improper repairs can lead to considerable hazards.

Fire hazard

- When positioning the device, ensure the supply cord is not trapped or damaged.
- Do not locate multiple portable socket-outlets or portable power supplies at the rear of the device.

Health hazard

- This device can be used by children aged from 8 years and above and persons with reduced physical, sensory or mental capabilities or lack of experience and knowledge if they have been given supervision or instruction concerning use of the device in a safe way and understand the hazards involved.
- Children shall not play with the device.
- Cleaning and user maintenance shall not be made by children without supervision.
- Children aged from 3 to 8 years are allowed to load and unload cooling devices.

Explosion hazard

- Do not store any explosive substances such as spray cans with a flammable propellant in the cooling device.

CAUTION! Failure to obey these cautions could result in minor or moderate injury.

Electrocution hazard

- Before starting the cooling device, ensure that the power supply line and the plug are dry.
- Disconnect the cooling device from the power supply
  - before each cleaning and maintenance
  - after every use

Health hazard

- Please check if the cooling capacity of the device is suitable for storing the food or medicine you wish to cool.
- Food may only be stored in its original packaging or in suitable containers.
- Opening the cooling device for long periods can cause significant increase of the temperature in the compartments of the device.
- Clean regularly surfaces that can come in contact with food and accessible drainage systems.
- Store raw meat and fish in suitable containers in the device, so that it is not in contact with or can drip onto other food.
- If the device is left empty for long periods:
  - Switch off the device.
  - Defrost the device.
  - Clean and dry the device.
  - Leave the lid open to prevent mould developing within the device.

NOTICE! Damage hazard

- Check that the voltage specification on the type plate corresponds to that of the energy supply.
- Only connect the cooling device as follows:
  - With the DC connection cable to a DC power supply in the vehicle
  - Or with the AC connection cable to an AC power supply
- Never pull the plug out of the socket by the cable.
- If the cooling device is connected to a DC outlet: Disconnect the cooling device and other power consuming devices from the battery before connecting a quick charging device.
- If the cooling device is connected to a DC outlet: Disconnect the cooling device or switch it off when you turn off the engine. Otherwise you may discharge the battery.
- The cooling device is not suitable for transporting caustic materials or materials containing solvents.
- The insulation of the cooling device contains flammable cyclopentane and requires special disposal procedures. Deliver the cooling device at the end of its life-cycle to an appropriate recycling center.
- Do not use electrical devices inside the cooling device unless they are recommended by the manufacturer for the purpose.
- Do not place the cooling device near naked flames or other heat sources (heaters, direct sunlight, gas ovens etc.).

- **Risk of overheating!**
  Ensure at all times that there is a minimum of 50 mm ventilation on all four sides of the cooling device. Keep the ventilation area free of any objects that could restrict the air flow to the cooling components.
  Do not place the cooling device in closed compartments or areas with none or minimal air flow.
- Ensure that the ventilation openings are not covered.
- Do not fill the inner container with ice or fluids.
- Never immerse the cooling device in water.
- Protect the cooling device and cables against heat and moisture.
- The device shall not to be exposed to rain.

3 Scope of delivery

Item in fig. 1, page 3	Quantity	Description
1	1	Cooler
2	1	Connection cable for DC connection
3	1	Connection cable for AC connection

4 Accessories

Available as accessory (not included in scope of delivery):

Designation	Ref. no.	Model
Universal fixing kit (belt system) CFX-UFK	9108300002	suits all models
Protective cover	9600028649	CFX3 25
	9600026468	CFX3 35
	9600026469	CFX3 45
	9600026470	CFX3 55
		CFX3 55IM
	9600026471	CFX3 75DZ
	9600026472	CFX3 95DZ
Fridge slide	9610000651	CFX3 35
		CFX3 45
	9610000652	CFX3 55
		CFX3 55IM
	9105306633	CFX3 75DZ
	9105306558	CFX3 95DZ
Quick fixing kit	9105306218	CFX3 25
CFX3 app	–	suits all models

Note that the CFX3 app may not be available in your country.

5 Intended use

The device is suitable for:

- Operation in vehicles
- Cooling and freezing food
- Camping use

The device is **not** suitable for:

- Storage of corrosive, caustic or solvent-containing substances
- Quick-freezing of food

The cooling device is suitable for camping use. The device shall not to be exposed to rain.

6 Function description

The cooler can chill products, keep them cool as well as freeze them. A low maintenance refrigerant circuit with compressor provides the cooling. The generous insulation and powerful compressor ensure efficient and fast cooling.

The cooler is portable.

The cooler can withstand a short-term inclination of 30°.

6.1 Scope of functions

- Power supply with priority circuit for connecting to the AC mains
- Three-level battery protection to protect the vehicle battery
- Display with temperature gauge in °C and °F
- Temperature setting in steps of 1 °C (1 °F)
- Integrated Bluetooth and WiFi function hence controllable using an app
- Foldable carrying handles
- USB charger for portable devices such as mobile phones
- Removable wire basket
- **CFX 3 55IM only:** Ice maker

6.2 Operating and display elements

Latch for lid: fig. 2 1, page 3

Operating panel (fig. 3, page 4):

Item	Description	Explanation
1		Switches the cooler on when the button is pressed briefly Switches the cooler off when the button is pressed for three seconds Returns to the previous menu
2	Display	Shows the information AC : AC power supply is connected DC V: DC power supply is connected : Bluetooth is activated : WiFi is activated : Display is locked ● : Compressor is working ■ : Ice maker is working (CFX3 55IM only)
3		Press △ to navigate upwards or to increase the selected value. Press ▽ to navigate downwards or to decrease the selected value. Press △ and ▽ simultaneously for 3 s to lock or unlock the display.
4	OK	Press to select a menu or to save the selected value.

Connection sockets (fig. 4, page 4):

Item	Description
1	Connection socket AC voltage supply
2	Connection socket DC voltage supply
3	DC Fuse holder
4	AC Fuse holder

7 Operation

7.1 Before initial use

NOTE
Before starting your new cooler for the first time, you should clean it inside and outside with a damp cloth for hygienic reasons (please also refer to the chapter “Cleaning and maintenance” on page 35).

7.2 Energy saving tips

- Choose a well ventilated location which is protected from direct sunlight.
- Allow warm food to cool down first before placing it in the cooling device to keep cool.
- Do not open the cooling device more often than necessary.
- Do not leave the cooling device open for longer than necessary.
- Defrost the cooler once a layer of ice forms.
- Avoid unnecessarily low temperatures.

7.3 Reversing the lid opening direction

CFX 3 55, CFX 3 55IM

➤ Proceed as shown (fig. **5**, page 5).

CFX 3 75DZ, CFX 3 95 DZ

➤ Proceed as shown (fig. **6**, page 6).

7.4 Connecting the cooler

NOTICE! Damage hazard

- For protection of the device the DC cable supplied includes a fuse inside the plug. Do **not** remove the fused DC plug.
  Only use the DC cable supplied.
- Disconnect the cooler and other consumer units from the battery before you connect the battery to a quick charging device.
  Overvoltage can damage the electronics of the device.

Connecting to a battery

➤ Proceed as shown (fig. **7**, page 7).

Connecting to an AC power supply

DANGER! Electrocution hazard

- Never handle plugs and switches with wet hands or if you are standing on a wet surface.
- If you are operating your cooler on board a boat from a AC power supply, you must install a residual current circuit breaker between the AC power supply and the cooler.
  Seek advice from a trained technician.

➤ Proceed as shown (fig. **8**, page 7).

7.5 Using the cooler

NOTICE! Risk of overheating
Ensure at all times that there is sufficient ventilation so that the heat that generated during operation can dissipate. Ensure that the ventilation slots are not covered. Make sure that the device is sufficiently far away from walls and other objects so that the air can circulate.

NOTE
When operating with the battery, the display switches off automatically if the battery voltage is low.

- Switching on the cooler: fig. 9, page 8
- Switching off the cooler: fig. 10, page 8

7.6 Using the display

Display states (fig. 11, page 8)

Item	Description
A	Stand by
B	Idle
C	Locked

Display overview: fig. 12, page 9

Navigating through the menus

The highlighted menu is selected.

➤ Press △ to navigate upwards.

➤ Press ▽ to navigate downwards.

Choosing a menu

➤ Press (OK) to select the required menu.

Changing settings

The highlighted value or setting is selected.

➤ Press △ to increase the selected value or to choose the previous setting.

➤ Press ▽ to decrease the selected value or to choose the next setting.

Returning to the previous menu

➤ Press ⏎ to return to the previous menu without saving.

7.7 Locking/unlocking the display

➤ Press △ and ▽ simultaneously for 3 s to lock or unlock the display (fig. 13, page 9).

7.8 Selecting the temperature units

➤ Proceed as shown (fig. 14, page 9).

7.9 Setting the temperature

NOTICE! Damage hazard from excessively low temperature
Ensure that only those objects are placed in the cooler that are intended to be cooled at the selected temperature.

➤ Proceed as shown (fig. 15, page 10).

7.10 Using the battery protection

The device is equipped with 3-stage battery protection. The battery protection prevents excessive discharging when the device is connected to a vehicle starter battery or maximises the use of a supply battery.

If the cooler is operated when the vehicle ignition is switched off, the cooler switches off automatically as soon as the supply voltage falls below a set level. The cooler will switch back on once the battery has been recharged to the restart voltage level.

NOTICE! Damage hazard
When switched off by the battery protection, the battery will no longer be fully charged. Avoid starting repeatedly. Ensure that the battery is recharged.

NOTE
When the cooler is supplied by a starter battery, select the battery protection mode “MEDIUM“ or “HIGH”. If the cooler is connected to a supply battery, the battery protection mode “LOW” is ideal.

➤ Proceed as shown (fig. **16**, page 11).

7.11 Setting the display’s brightness

➤ Proceed as shown (fig. **17**, page 11).

7.12 Switching on or off the compartments (only CFX 3 75DZ, CFX 3 95DZ)

You can activate each zone individually or both of them.

➤ Proceed as shown (fig. **18**, page 12).

7.13 Using the ice maker (only CFX 3 55IM)

NOTE
- Independent of the main compartment's temperature setting, the ice maker zone is designed for making ice cubes if the ice maker is switched on.
- The cooler's energy consumption increases with ice maker on. Therefore you should switch off the ice maker if it is not needed.
- The factory setting for the ice maker is OFF.

➤ Proceed as shown (fig. 19, page 12).

Filling the ice trays with water

➤ Remove the ice trays (fig. 20 1, page 13) from the ice maker housing (fig. 20 2, page 13).

➤ Remove the ice tray covers, fill with clean water and re-fit the cover, taking care to press the edge seal all the way around.

➤ Re-position the ice trays in the ice maker housing and close the lid.

NOTE
Dry any water spillage from under the ice trays.
This will reduce ice build up under the trays and make removal easier.

Removing the ice cubes

➤ Open the ice maker housing lid and lift under the front of the ice trays.

NOTE
Removal may require additional force using two hands in high humidity conditions which may create an ice bond underneath the ice trays.

➤ Remove the ice tray covers and twist trays to release the ice cubes.

Removing the ice maker housing

The ice maker housing can be removed for cleaning or when not in use to increase usable space inside the cooler:

➤ Lift the housing at one end until the lug unclips, then remove.

➤ Reverse procedure for re-fit, pushing down on lugs to snap into position.

Tips for using the ice maker

- The ice maker makes ice fast for a number of hours after switching on and then automatically goes into an ice maintenance mode to reduce energy consumption. If multiple batches of ice are required as quickly as possible, switching the ice maker off and back on will set it back into fast ice making mode. Repeat as required.
- Low freezer temperature settings in the main compartment may not be maintained in high ambient conditions with the ice maker switched on.

Cleaning and drying the ice maker

➤ When not in use clean and dry the ice trays and inside the ice maker housing to prevent mould.

➤ Following extended periods of non-use clean the inside of the ice trays with a mild dish washing solution and rinse with clean water prior to use.

7.14 Downloading the CFX 3 app

The cooler can be monitored and controlled via Bluetooth or WiFi using an app that you can install on a compatible device.

➤ Download the CFX 3 app from App Store or Google Play.

Note that the CFX 3 app may not be available in your country.

7.15 Setting the Bluetooth signal and connecting to the app

The cooler can be monitored and controlled via Bluetooth. To do so, you have to pair the cooler with your Bluetooth device.

NOTE
- Pairing must be done within the CFX3 app, not in device settings.
- There is no password required for Bluetooth connection.

➤ Proceed as shown (fig. 21, page 13).

7.16 Setting the WiFi signal and connecting to the app

The cooler can be monitored and controlled via WiFi direct to cooler or via a WiFi network.

➤ Proceed as shown (fig. 22, page 14) to turn WiFi on.

➤ For WiFi direct to cooler, go to device settings and select your cooler.
- The WiFi name of your cooler begins with "CFX3".
- The preset password is "**00000000**".
- You can personalise the WiFi name and the password in the CFX3 app.

NOTE
For connection via WiFi network, go to "network connection" in the app SETTINGS.

7.17 Changing CFX name and password in the app

- You can personalise the name of your CFX in the app.
- The same name applies to both Bluetooth and WiFi.
- You can also personalise your password in the app -applicable only to WiFi.

➤ Proceed to "CFX name and password" in the app SETTINGS.

7.18 Resetting the app password (WiFi only)

- You can reset the app password to the factory setting "**00000000**".

➤ Proceed as shown (fig. 22, page 14).

7.19 Resetting to factory settings

The reset function changes all display menu and app fields to the original factory settings.

➤ Proceed as shown (fig. 23, page 14).

7.20 USB port for power supply

The USB port allows you to charge small devices like mobile phones and mp3 players.

NOTE
Ensure that any small device connected to the USB port is compatible with 5 V/2 A operation.

➤ Proceed as shown (fig. 25, page 15).

7.21 Defrosting the cooler

Humidity can form frost in the interior of the cooling device or on the evaporator. This reduces the cooling capacity. Defrost the device in good time to avoid this.

NOTICE! Damage hazard
Never use hard or pointed tools to remove ice or to loosen objects which have frozen in place.

To defrost the cooler, proceed as follows:

➤ Take out the contents of the cooler.

➤ If necessary, place them in another cooling device to keep them cool.

➤ Switch off the device.

➤ Leave the lid open.

➤ Wipe off the defrosted water.

7.22 Replacing the AC fuse

DANGER! Electrocution hazard
Disconnect the power supply and the connection cable before you replace the device fuse.

- ➤ Disconnect the power supply to the device.
- ➤ Pull out the connection cable.
- ➤ Pry out the fuse insert (fig. 4 4, page 4) with a screwdriver.
- ➤ Replace the defective glass fuse with a new one of the same type and rating (Fast Acting, 4 A, 250 V).
- ➤ Press the fuse insert back into the housing.
- ➤ Reconnect the power supply to the device.

7.23 Replacing the DC fuse

- ➤ Pry out the fuse cover (fig. 4 3, page 4) with a screwdriver.
- ➤ Reverse the fuse cover and use hook to remove the defective blade fuse.
- ➤ Push in a new fuse of the same type and rating.
- ➤ Re-fit the fuse cover.

7.24 Replacing the DC plug fuse

- ➤ Replace the defective fuse with a new fuse of the same type and rating.
- ➤ Proceed as shown (fig. 26, page 15).

7.25 Replacing the light PCB

NOTICE! Damage hazard
The lamp can only be replaced by the manufacturer, service agent or similarly qualified person to avoid hazard.

8 Cleaning and maintenance

NOTICE! Damage hazard
- Never clean the cooler under running water or in dish water.
- Do not use abrasive cleaning agents or hard objects during cleaning as these can damage the cooler.

➤ Occasionally clean the device interior and exterior with a damp cloth.

➤ Make sure that the air inlet and outlet vents on the device are free of any dust and dirt, so that heat can be released and the device is not damaged.

9 Troubleshooting

Fault	Possible cause	Suggested remedy
The device does not function (DC mode, ignition on).	No voltage was detected in the DC power outlet.	In most vehicles the ignition must be turned on before power will be supplied to the DC power outlet.
	The DC outlet is dirty. This results in a poor electrical contact.	If the plug of the device becomes very warm in the DC outlet, either the DC outlet must be cleaned or the plug has not been assembled correctly.
	The fuse of the DC plug has blown.	Replace the fuse in the DC plug, see chapter "Replacing the DC plug fuse" on page 34.
	The device DC fuse has blown.	Replace the device DC fuse, see chapter "Replacing the DC fuse" on page 34.
	The vehicle fuse has blown.	Replace the vehicle's DC outlet fuse. Please refer to your vehicle's operating manual.
The device does not function (AC mode).	No voltage present in the AC voltage socket.	Try using another plug socket.
	The device AC fuse has blown.	Replace the device AC fuse, see chapter "Replacing the AC fuse" on page 34.
	The integrated AC adapter is defective.	This can only be repaired by an authorised repair centre.

Fault	Possible cause	Suggested remedy
The display does not respond to keystrokes.	The display is locked.	Unlock the display, see chapter "Locking/unlocking the display" on page 28.
The app cannot control the device.	Bluetooth or WiFi is not connected.	Connect Bluetooth, see chapter "Setting the Bluetooth signal and connecting to the app" on page 32, or Connect WiFi, see chapter "Setting the WiFi signal and connecting to the app" on page 32
The display shows an alert message or warning code.	–	See table below.

Alert messages

E.g. see fig. 24 A, page 14.

Alert message	Description	Possible cause	Suggested remedy
!ALERT - Lid open > 3min	Lid open more than 3 minutes	• Lid not fully latched • Internal fault	• Check lid latched fully • Authorised repair centre inspection required
!ALERT - Voltage low	The device has stopped working on DC due to low voltage	• Insufficient supply voltage • Battery voltage is too low • Battery protection is set too high	• Check voltage drop from battery to power outlet and increase wiring gauge if necessary • Test the battery and charge as needed • Select a lower battery protection setting
	The device has stopped working on DC due to abnormally high voltage >31.5 V (unlikely event – for electronics protection only – uses same alert message as low voltage above)	• Wrong DC supply voltage specification • Faulty supply voltage • Internal fault	• Ensure DC supply voltage specification matches CFX 3 product rating label • Check DC voltage supply & repair or replace if faulty • Authorised repair centre inspection required

Warning codes

E.g. see fig. 24 B, page 14.

Warning code	Fault	Possible cause	Suggested remedy
!WARNING 32	Fan over-current	Internal fault.	Turn off the device for at least 5 mins., then restart. If the problem persists, authorised repair centre inspection required
!WARNING 33	Compressor start fail		
!WARNING 34	Compressor speed low	• High ambient temperature • Air vent blocked or insufficient clearance • Internal fault	• Turn off the device for at least 30 mins., or move to a cooler location, then restart • Clear the vents • Authorised repair centre inspection required
!WARNING 35	Controller over-temperature		
!WARNING 01	NTC open circuit SZ & DZ LARGE	Internal fault	Authorised repair centre inspection required
!WARNING 11	NTC open circuit DZ SMALL		
!WARNING 02	NTC short circuit SZ & DZ LARGE		
!WARNING 12	NTC short circuit DZ SMALL		
!WARNING 09	DZ valve or Ice Maker valve faulty		Turn off the device for at least 1min., then restart. If the problem persists, authorised repair centre inspection required
!WARNING 03/43	Communication error		

10 Warranty

If the product does not work as it should, please contact your retailer or the manufacturer's branch in your country (see dometic.com/dealer). The warranty applicable to your product is 3 years (full) plus additional 2 years compressor (parts only).

For repair and warranty processing, please include the following documents when you send in the device:

- A copy of the receipt with purchasing date
- A reason for the claim or description of the fault

Australia only

Our goods come with guarantees that cannot be excluded under the Australian Consumer Law. You are entitled to a replacement or refund for a major failure and for compensation for any other reasonably foreseeable loss or damage. You are also entitled to have the goods repaired or replaced if the goods fail to be of acceptable quality and the failure does not amount to a major failure.

New Zealand only

This warranty policy is subject to the conditions and guarantees which are mandatory as implied by the Consumer Guarantees Act 1993(NZ).

11 Disposal

➤ Place the packaging material in the appropriate recycling waste bins wherever possible.

If you wish to finally dispose of the product, ask your local recycling centre or specialist dealer for details about how to do this in accordance with the applicable disposal regulations.

WARNING! Risk of child entrapment
Before disposing of your old cooling device:
- Dismantle the lid.
- Leave the baskets in place so that children may not easily climb inside.

12 Technical data

NOTE
The minimum temperature shown in „Cooling capacity“ cannot be attained if the ambient temperature is above 32 °C (90 °F) for models CFX3 25/35/45/55/55IM or the ambient temperature is above 30 °C (86 °F) for models CFX3 75DZ/95DZ (set small –22 °C/large +4 °C).

Test/certificates:

	CFX3 25	**CFX3 35**
Connection voltage:	12/24 V⎓ 100 – 240 V∼	
Rated current:	12 V⎓: 6.5 A 24 V⎓: 3.2 A 100 V∼ : 0.90 A 240 V∼ : 0.38 A	12 V⎓: 7.5 A 24 V⎓: 3.3 A 100 V∼ : 0.94 A 240 V∼ : 0.39 A
Cooling capacity:	–22 °C to +10 °C (–7 °F to +50 °F)	
Energy consumption:	78 kWh/annum	81 kWh/annum
Total volume:	25 l	36 l
Climate class:	N, T	
Ambient temperature:	+16 °C to +43 °C (+61 °F to +110 °F)	
USB charging port:	5 V⎓, 2 A	
Frequency range:	WiFi: 2412 MHz – 2472MHz/2422 MHz – 2462MHz Bluetooth/BLE: 2402 MHz – 2480 MHz	
Frequency band (WiFi):	2.4 GHz	
RF output power:	WiFi: 16.62 dBm (802.11b), 16.23 dBm (802.11g), 16.45 dBm (802.11n20), 16.02 dBm (802.11n40) Bluetooth: 8.31 dBm Bluetooth LE: 6.67 dBm	
Refrigerant quantity:	32 g	38 g
CO_2 equivalent:	0.046 t	0.054 t
Global warming potential (GWP):	1430	
Dimensions (W x D x H) mm (including handles):	342 x 569 x 420	398 x 694 x 407
Weight:	13.4 kg	17.7 kg

	CFX 3 45	**CFX 3 55**
Connection voltage:	12/24 V⎓ 100 – 240 V∼	
Rated current:	12 V⎓: 8.2 A 24 V⎓: 3.5 A 100 V∼ : 0.96 A 240 V∼ : 0.40 A	12 V⎓: 8.7 A 24 V⎓: 3.7 A 100 V∼ : 0.98 A 240 V∼ : 0.41 A
Cooling capacity:	–22 °C to +10 °C (–7 °F to +50 °F)	
Energy consumption:	79 kWh/annum	83 kWh/annum
Total volume:	46 l	55 l
Climate class:	N, T	
Ambient temperature:	+16 °C to +43 °C (+61 °F to +110 °F)	
USB charging port:	5 V⎓, 2 A	
Frequency range:	WiFi: 2412 MHz – 2472MHz/2422 MHz – 2462MHz Bluetooth/BLE: 2402 MHz – 2480 MHz	
Frequency band (WiFi):	2.4 GHz	
RF output power:	WiFi: 16.62 dBm (802.11b), 16.23 dBm (802.11g), 16.45 dBm (802.11n20), 16.02 dBm (802.11n40) Bluetooth: 8.31 dBm Bluetooth LE: 6.67 dBm	
Refrigerant quantity:	42 g	45 g
CO_2 equivalent:	0.060 t	0.064 t
Global warming potential (GWP):	1430	
Dimensions (W x D x H) mm (including handles):	398 x 694 x 476	720 x 455 x 480
Weight:	19.4 kg	21.2 kg

	CFX 3 55IM	**CFX 3 75DZ**	**CFX 3 95DZ**
Connection voltage:	12/24 V⎓ 100 – 240 V∼		
Rated current:	12 V⎓: 8.9 A 24 V⎓: 3.8 A 100 V∼ : 1.00 A 240 V∼ : 0.42 A	12 V⎓: 9.6 A 24 V⎓: 4.2 A 100 V∼ : 1.12 A 240 V∼ : 0.47 A	12 V⎓: 10.4 A 24 V⎓: 4.6 A 100 V∼ : 1.22 A 240 V∼ : 0.51 A
Cooling capacity:	–22 °C to +10 °C (–7 °F to +50 °F)		
Energy consumption:	82 kWh/annum	108 kWh/annum	111 kWh/annum
Total volume:	53 l	75 l (45 l/30 l)	94 l (55 l/39 l)
Climate class:	N, T		
Ambient temperature:	+16 °C to +43 °C (+61 °F to +110 °F)		
USB charging port:	5 V⎓, 2 A		
Frequency range:	WiFi: 2412 MHz – 2472MHz/2422 MHz – 2462MHz Bluetooth/BLE: 2402 MHz – 2480 MHz		
Frequency band (WiFi):	2.4 GHz		
RF output power:	WiFi: 16.62 dBm (802.11b), 16.23 dBm (802.11g), 16.45 dBm (802.11n20), 16.02 dBm (802.11n40) Bluetooth: 8.31 dBm Bluetooth LE: 6.67 dBm		
Refrigerant quantity:	45 g	59 g	67 g
CO_2 equivalent:	0.064 t	0.084 t	0.096 t
Global warming potential (GWP):	1430		
Dimensions (W x D x H) mm (including handles):	720 x 455 x 480	892 x 495 x 472	962 x 530 x 472
Weight:	22.1 kg	28.6 kg	30.6 kg

The coolant circuit contains R134a.

Contains fluorinated greenhouse gases

Hermetically sealed equipment

Standards

Determination of energy consumption: IEC 62552 (2018)

Determination of volume: AS/NZS 4474.1:2007

Mobile living made easy.

DOMETIC

dometic.com

YOUR LOCAL DEALER

dometic.com/dealer

YOUR LOCAL SUPPORT

dometic.com/contact

YOUR LOCAL SALES OFFICE

dometic.com/sales-offices

4445103159 09/2020

A complete list of Dometic companies, which comprise the Dometic Group, can be found in the public filings of:
DOMETIC GROUP AB Hemvärnsgatan 15 SE-17154 Solna Sweden