WAECO
by Dometic GROUP

CoolFreeze CFX-QFK

9105306218 / 9105330252

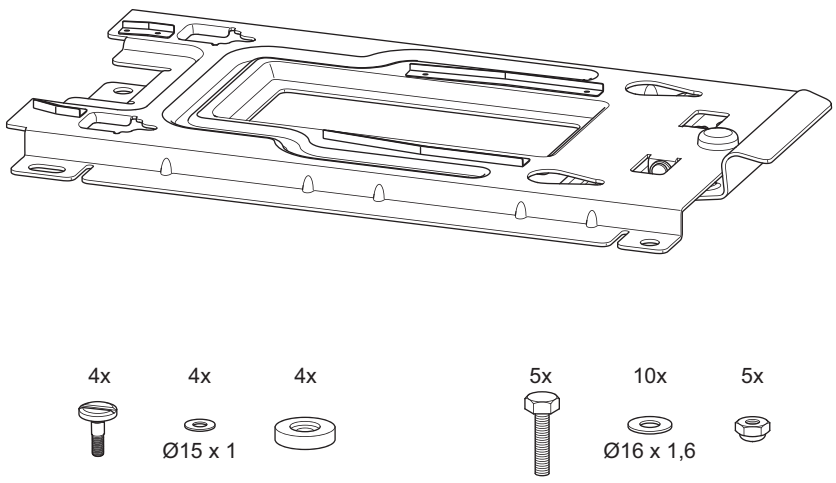

1

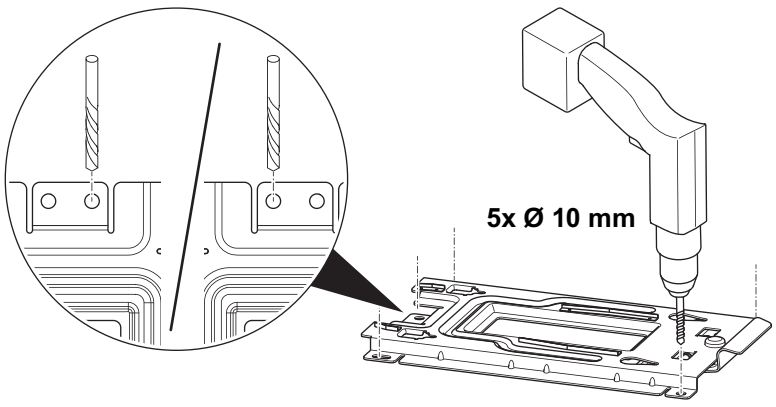

2

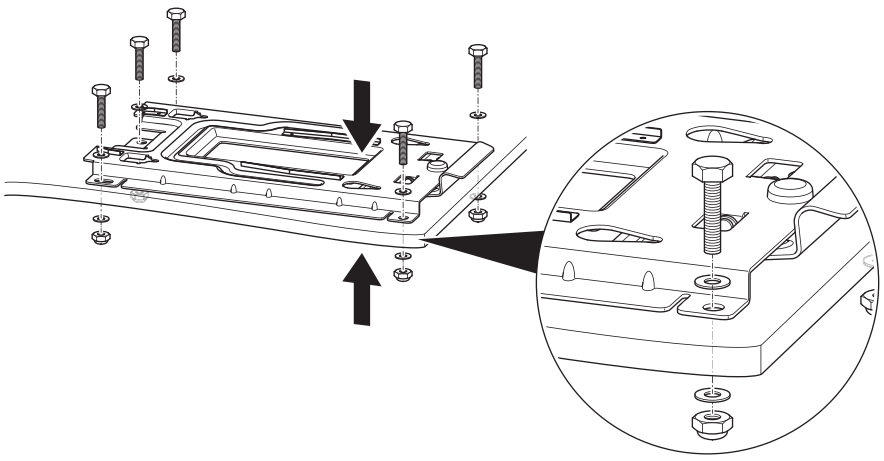

3

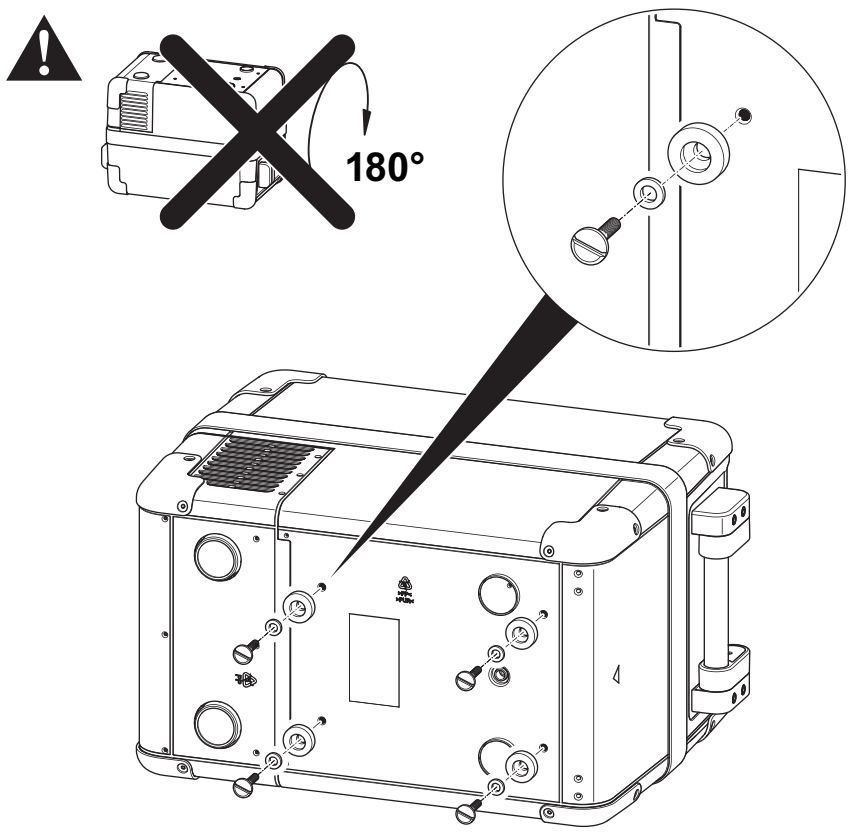

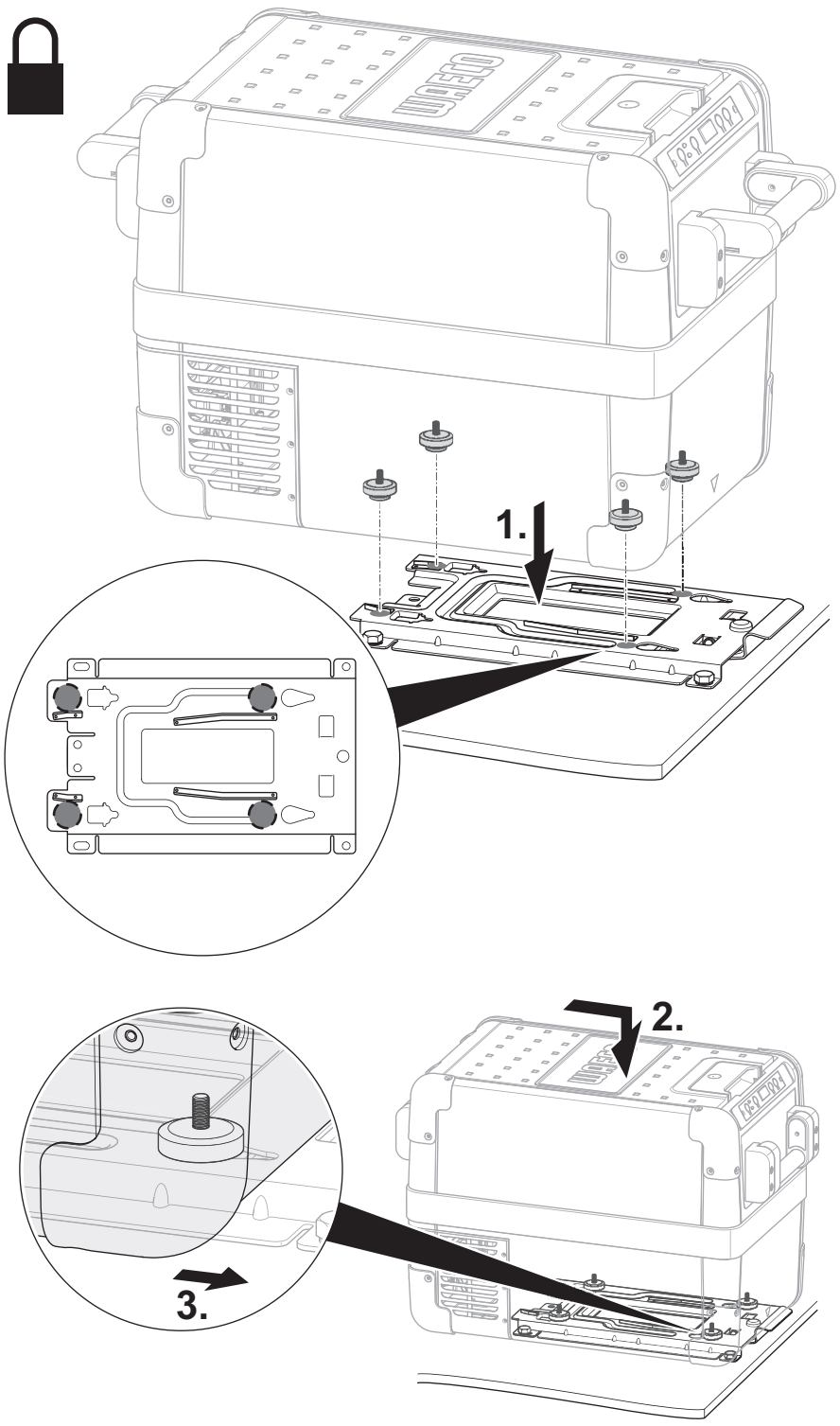

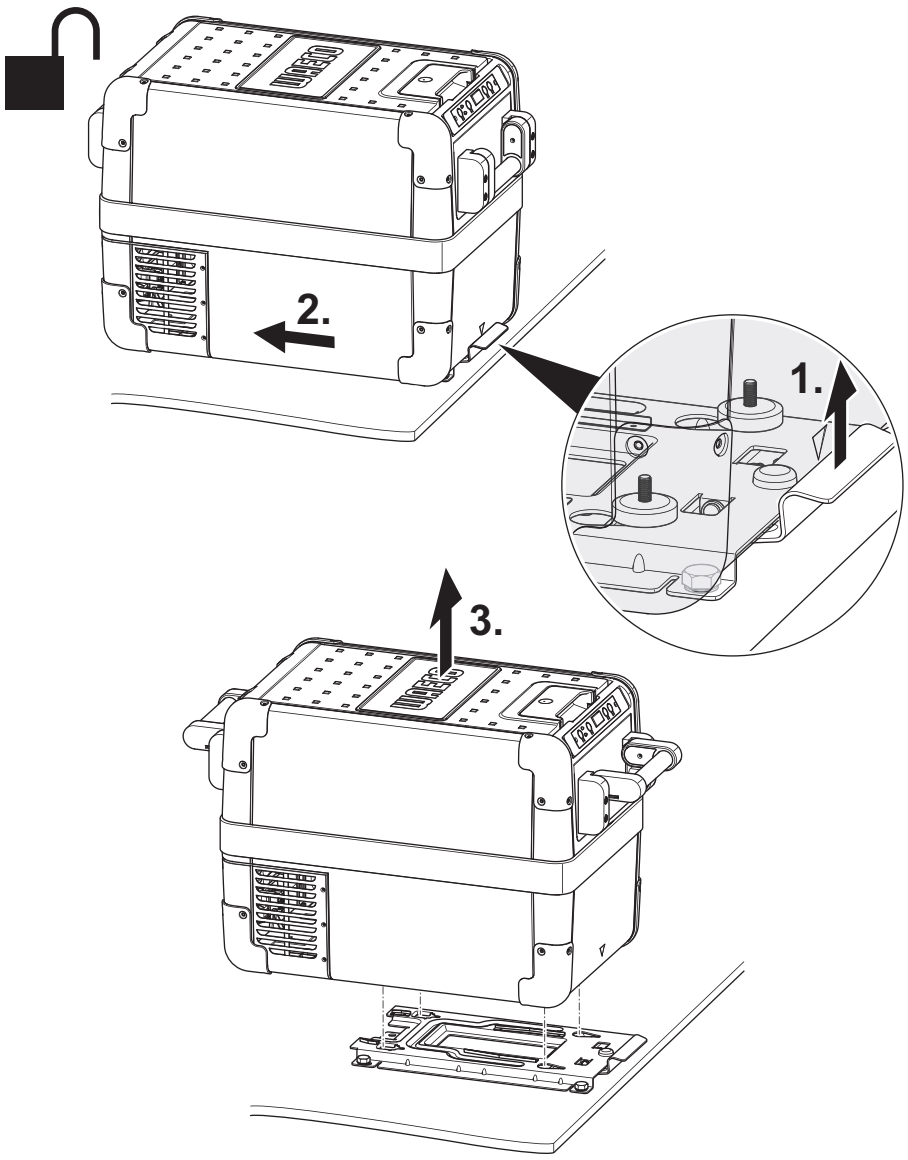

Dometic GROUP

GERMANY
Dometic WAECO International GmbH
Hollefeldstraße 63 · D-48282 Emsdetten
☏ +49 (0) 2572 879-195 · 🖷 +49 (0) 2572 879-322
Mail: info@dometic-waeco.de · Internet: www.dometic-waeco.de

AUSTRALIA
Dometic Australia Pty. Ltd.
1 John Duncan Court
Varsity Lakes QLD 4227
☏ 1800 212121
🖷 +61 7 55076001
Mail: sales@dometic-waeco.com.au

AUSTRIA
Dometic Austria GmbH
Neudorferstrasse 108
2353 Guntramsdorf
☏ +43 2236 908070
🖷 +43 2236 90807060
Mail: info@waeco.at

BENELUX
Dometic Benelux B.V.
Ecustraat 3
NL-4879 NP Etten-Leur
☏ +31 76 5029000
🖷 +31 76 5029090
Mail: info@dometic.nl

DENMARK
Dometic Denmark A/S
Nordensvej 15, Taulov
DK-7000 Fredericia
☏ +45 75585966
🖷 +45 75586307
Mail: info@waeco.dk

FINLAND
Dometic Finland OY
Mestarintie 4
FIN-01730 Vantaa
☏ +358 20 7413220
🖷 +358 9 7593700
Mail: info@dometic.fi

FRANCE
Dometic SAS
ZA du Pré de la Dame Jeanne
F-60128 Plailly
☏ +33 3 44633500
🖷 +33 3 44633518
Commercial : info@dometic.fr
SAV/Technique : service@dometic.fr

HONG KONG
WAECO Impex Ltd.
Suites 2207-2211 · 22/F · Tower 1
The Gateway · 25 Canton Road,
Tsim Sha Tsui · Kowloon
☏ +852 24611386
🖷 +852 24665553
Mail: info@dometic-waeco.com.hk

HUNGARY
Dometic Plc. Sales Office
Kerékgyártó u. 5.
H-1147 Budapest
☏ +36 1 468 4400
🖷 +36 1 468 4401
Mail: budapest@dometic.hu

ITALY
Dometic Italy S.r.l.
Via Virgilio, 3
I-47100 Forlì
☏ +39 0543 754901
🖷 +39 0543 756631
Mail: info@dometic.it

NORWAY
Dometic Norway AS
Skolmar 24
N-3232 Sandefjord
☏ +47 33428450
🖷 +47 33428459
Mail: firmapost@waeco.no

POLAND
Dometic Poland Sp. z o.o.
Ul. Puławska 435A
02-801 Warszawa
☏ +48 22 414 32 00
🖷 +48 22 414 32 01
Mail: info@dometic.pl

RUSSIA
Dometic RUS LLC
Komsomolskaya square 6-1
107140 Moscow
☏ +7 495 780 79 39
🖷 +7 495 916 56 53
Mail: info@dometic.ru

SLOVAKIA
Dometic Slovakia Sales Office Bratislava
Nádražná 34/A
SK-900 28 Ivanka pri Dunaji
☏/🖷 +421 2 45 529 680
Mail: bratislava@dometic.com

SPAIN
Dometic Spain S.L.
Avda. Sierra del Guadarrama, 16
E-28691 Villanueva de la Cañada
Madrid
☏ +34 902 111 042
🖷 +34 900 100 245
Mail: info@dometic.es

SWEDEN
Dometic Scandinavia AB
Gustaf Melins gata 7
S-42131 Västra Frölunda (Göteborg)
☏ +46 31 7341100
🖷 +46 31 7341101
Mail: info@waeco.se

SWITZERLAND
Dometic Switzerland AG
Riedackerstrasse 7a
CH-8153 Rümlang (Zürich)
☏ +41 44 8187171
🖷 +41 44 8187191
Mail: info@dometic-waeco.ch

TAIWAN
WAECO Impex Ltd.
Taipei Office
9F.-10, No. 1180, Zhongzheng Rd.,
Zhonghe Dist., New Taipei City 23586
☏ +886 2 22237225
🖷 +886 2 81926742
Mail: marketing@waeco.com.tw

UNITED KINGDOM
Dometic UK Ltd.
Dometic House · The Brewery
Blandford St. Mary
Dorset DT11 9LS
☏ +44 844 626 0133
🖷 +44 844 626 0143
Mail: sales@dometic.co.uk

UNITED ARAB EMIRATES
Dometic Middle East FZCO
P. O. Box 17860
S-D 6, Jebel Ali Freezone
Dubai
☏ +971 4 883 3858
🖷 +971 4 883 3868
Mail: info@dometic.ae

UNITED STATES OF AMERICA
Dometic Marine Division
2000 N. Andrews Ave. Extension
Pompano Beach, FL 33069 USA
☏ +1 954 973 2477
🖷 +1 954 979 4414
Mail: marinesales@dometicusa.com

www.dometic-waeco.com

4445101338 10/2015