DOMETIC

POWER & CONTROL
PORTABLE BATTERY PACK

PLB40

EN

Portable lithium iron phosphate Battery Pack

Operating manual

Please carefully read and follow all instructions, guidelines and warnings included in this product manual in order to ensure that you install, use and maintain the product properly at all times.

By using the product, you hereby confirm that you have read this disclaimer, all instructions, guidelines and warnings carefully and that you understand and agree to abide by the terms and conditions as set forth herein.

You agree to use this product only for the intended purpose and application and in accordance with the instructions, guidelines and warnings as set forth in this product manual as well as in accordance with all applicable laws and regulations.

A failure to read and follow the instructions and warnings set forth herein may result in an injury to yourself and others, damage to your product or damage to other property in the vicinity.

Dometic accepts no liability for any loss, damage or injury incurred, directly or indirectly, from the installation, use or maintenance of the product not in compliance with the instructions and warnings in the product manual.

This product manual, including the instructions, guidelines and warnings, and related documentation may be subject to changes and updates. For up-to-date product information, please visit: documents.dometic.com, dometic.com.

Table of contents

1 Explanation of symbols 2
2 General safety instructions 3
3 Scope of delivery 5
4 Intended use 6
5 Technical description 6
6 Using the appliance 9
7 Troubleshooting 12
8 Maintaining and cleaning the product 14
9 Warranty 14
10 Disposal 15
11 Technical data 15

1 Explanation of symbols

WARNING!
Safety instruction: Indicates a hazardous situation that, if not avoided, could result in death or serious injury.

CAUTION!
Safety instruction: Indicates a hazardous situation that, if not avoided, could result in minor or moderate injury.

NOTICE!
Indicates a situation that, if not avoided, can result in property damage.

NOTE
Supplementary information for operating the product.

2 General safety instructions

The manufacturer accepts no liability for damage in the following cases:

- Damage to the product resulting from mechanical influences and incorrect connection voltage
- Alterations to the product without express permission from the manufacturer
- Use for purposes other than those described in the operating manual

The declaration of conformity can be requested from the manufacturer (contact information on the back).

Note the following basic safety information when using electrical devices to protect against:

- Electric shock
- Fire hazards
- Injury

2.1 General safety

WARNING! INSTRUCTIONS PERTAINING TO RISK OF FIRE, ELECTRIC SHOCK, OR INJURY TO PERSONS.

- Only use the device as intended.
- Disconnect the device from the mains
  - Before cleaning and maintenance
  - After use
  - Before changing a fuse
- To reduce risk of damage to the electric plug and cord, pull the plug rather than the cord when disconnecting the device.
- Do not use a device that is damaged or modified. Damaged or modified devices may exhibit unpredictable behavior resulting in fire, explosion or risk of injury.
- Do not operate the device with a damaged cord or plug, or a damaged output cable.

- Do not disassemble the device, take it to a qualified service person when service or repair is required. Incorrect reassembly may result in a risk of fire or electric shock.
- To reduce the risk of electric shock, unplug the device from the outlet before attempting any instructed servicing.
- Do not expose to liquid, vapor, rain, sleet, snow or the like.
- The device shall be stored indoors and protected from the elements.
- Never smoke or allow a spark or flame in vicinity of battery or engine.
- When charging the device, work in a well ventilated area and do not restrict ventilation in any way.
- Do not expose the device to fire or excessive temperature. Exposure to fire or temperature above 130 °C (266 °F) may cause explosion.
- **Electrical devices are not toys.**
  Always keep and use the device out of the reach of children.
- Children must be supervised to ensure that they do not play with the device.

NOTICE! MATERIAL DAMAGE.

- Do not insert foreign objects into the output or input terminals.
- Do not put fingers or hands into the device.
- Do not attempt to replace the internal battery cells.
- Before using for the first time, charge your battery pack using one of the methods described in chapter "Charging the lithium iron phosphate battery pack" on page 10.
- Before using the device for the first time, check that the voltage specification on the rating plate matches that of the power supply.
- Never pull on the power cord to unplug the device from the power socket.
- Store the device in a dry and cool place.

2.2 Operating the device safely

WARNING! INSTRUCTIONS PERTAINING TO RISK OF FIRE, ELECTRIC SHOCK, OR INJURY TO PERSONS.

- Only use the charger supplied to charge the device. Use of an attachment not recommended or sold by the manufacturer may result in a risk of fire, electric shock, or injury to persons.

- The power socket to which the device is connected must be close by and easily accessible.

CAUTION! FIRE AND/OR EXPLOSION HAZARD.

- Do **not** operate the device
  - In the vicinity of corrosive fumes
  - In the vicinity of combustible materials
  - In areas where there is a danger of explosions
- Do **not** place the device next to heat sources such as fires.
- Place the device in a shady place. Avoid direct sun exposure in hot and humid surroundings for a proper usage.

NOTICE! MATERIAL DAMAGE.

- Do not disconnect any cables when the device is still in use.
- Only use the device in upright position.

3 Scope of delivery

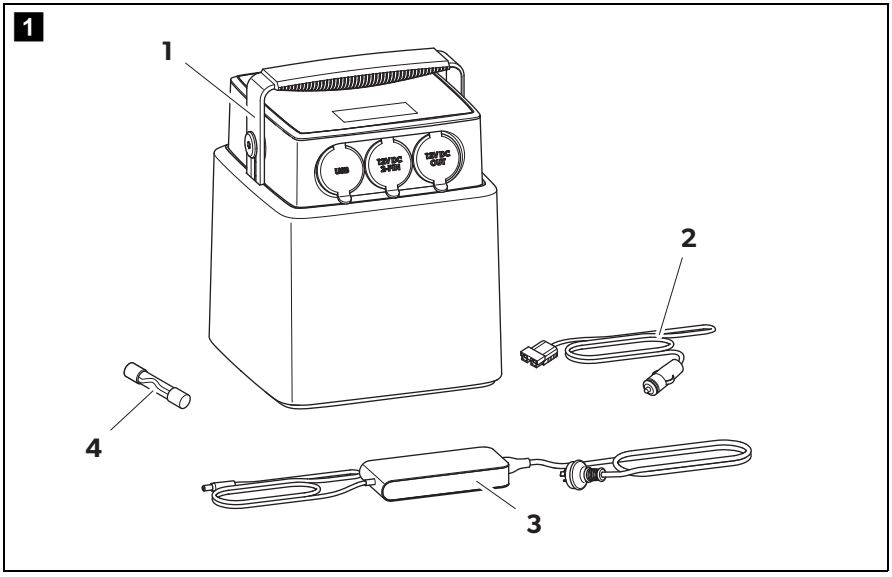

No. in fig. 1	Description
1	Portable lithium iron phosphate battery pack
2	DC charge cable
3	AC power supply unit
4	2x DC Fuse

4 Intended use

The portable lithium iron phosphate battery pack is for use in camping application. It comes with four outlets to power devices like tablet, mobile phone, portable fridge/freezer etc.

The battery pack is suitable for

- the connection to 12 V appliances with low power consumption e.g. small inverters up to 150 W,
- the connection to a laptop with an additional 150 W inverter connected to the 12 V DC connection socket output.

It is not allowed

- to use the battery pack as a starter battery for a vehicle,
- to use two battery packs in parallel connection.

This product is only suitable for the intended purpose and application in accordance with this instruction. Any other use, deviating from the intended use, is not allowed! Dometic accepts no liability for any loss, damage or injury incurred, directly or indirectly due to other as the intended use.

5 Technical description

The portable lithium iron phosphate battery pack (LiFePO4) enables mobile power supply for portable refrigeration, USB devices and small inverters up to 150 W continuous output.

A DC consumer unit (e.g. a portable refrigeration) can be simultaneously supplied with power while the lithium iron phosphate battery is being charged via the power supply unit.

The housing is shock, heat and UV resistant.

The lithium iron phosphate battery can be charged in three ways:

- via the supplied AC/DC charger on the AC mains (max. 8 A)
- via DC connection through vehicle alternator (max. 8 A)
- via DC connection through solar panel

The device has the following protective functions:

- Overtemperature, undertemperature protection
- Overvoltage protection
- Undervoltage protection
- Overcurrent protection
- Short circuit protection
- Incorrect polarity protection

5.1 Connections and display

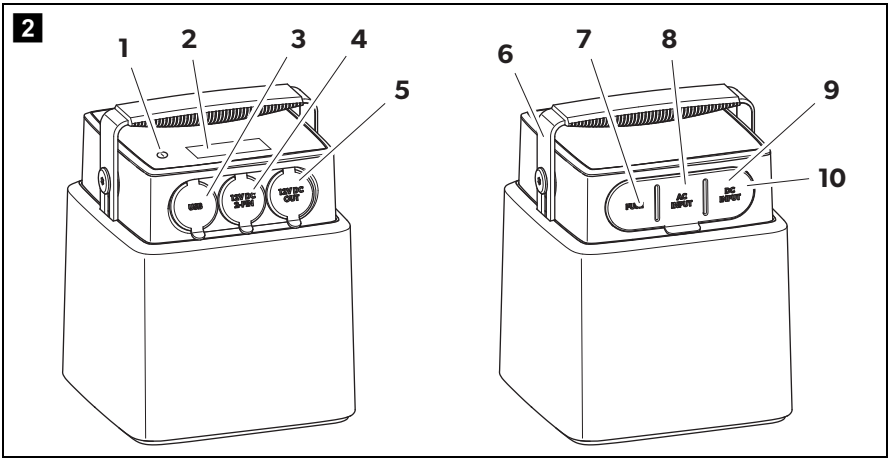

No. in fig. 2	Description
1	Power button
2	Display (LCD)
3	2 x USB socket (5 V, max. 4.2 A overall)
4	12 V⎓ 2-pin connection output to portable refrigeration
5	12 V⎓ heavy duty connection socket output for portable refrigeration and 12 V applicances

No. in fig. 2	Description
6	Adjustable handle
7	2x fuse holder
8	AC/DC adapter input socket
9	DC/DC Anderson™ SB™ input socket
10	Reset button (beneath the cap)

5.2 Display

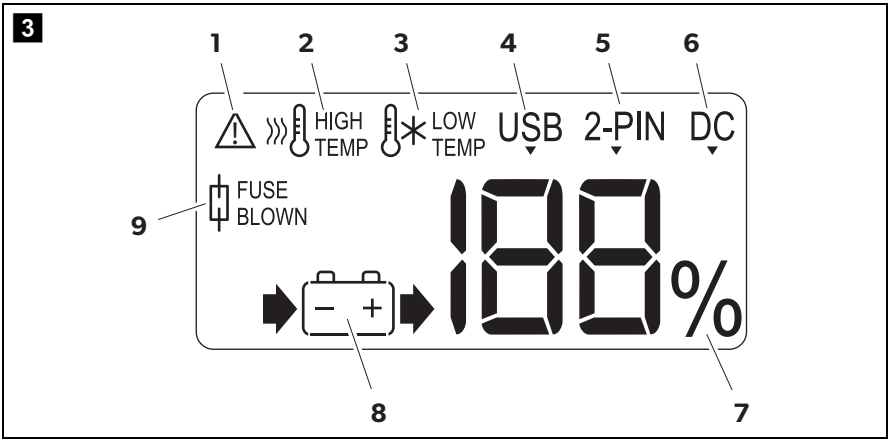

No. in fig. 3		Description
1	⚠	A failure occurred (chapter “Troubleshooting” on page 12).
2	HIGH TEMP	See chapter “Troubleshooting” on page 12.
3	LOW TEMP	See chapter “Troubleshooting” on page 12.
4	USB	The battery pack supplies energy to an USB device.
5	2-PIN	The battery pack supplies energy to a device connected to the 2-PIN output.

No. in fig. 3		Description
6	DC	The battery pack supplies energy to a device connected to the DC output.
7	188%	State of charge as a percentage
8		Battery is being discharged
		Battery is being charged
		Battery is being charged and discharged at the same time
9	FUSE BLOWN	See chapter “Troubleshooting” on page 12.

6 Using the appliance

6.1 Before first use

➤ Before first use or storing plug the battery pack into the wall charger until it is fully charged.

➤ Observe the information given in chapter “Charging the lithium iron phosphate battery pack” on page 10.

6.2 Starting and switching off

Starting the lithium iron phosphate battery pack

➤ Press the power button (fig. 2 1, page 7) for at least 3 seconds to start the device.

✓ The device emits 2 beeps.

✓ The display shows the operational status:
: the lithium iron phosphate battery is being charged
: the lithium iron phosphate battery is being discharged
: the lithium iron phosphate battery is on idle mode

✓ The display switches off automatically after 1 minute.

Switching the display on

➤ Press the power button (fig. 2 1, page 7) briefly to switch on the display.

Switching off the lithium iron phosphate battery pack

The battery pack switches off automatically after 24 hours if no load and no charger are connected.

➤ Press the power button (fig. 2 1, page 7) for at least 3 seconds to switch the device off.

✓ The device emits 1 beep.

✓ The display switches off.

6.3 Charging the lithium iron phosphate battery pack

WARNING! FIRE AND/OR EXPLOSION HAZARD.
Lithium iron phosphate batteries that are charged with too high voltage can ignite. Use 8 to 25 V input voltage to charge the battery pack.

➤ Place the lithium iron phosphate battery on a firm base.

Charging with the power supply unit

➤ Connect the power supply unit to the connection socket (fig. 2 8, page 7).

➤ Connect the power supply unit to the AC mains.

✓ The symbol lights up.

✓ The display shows the charging status.

Charging with the smart alternator, 12 V accessory socket or solar panel

➤ Connect the charge cable to the connection socket (fig. 2 9, page 7).

➤ Connect the DC plug to the DC inlet Anderson socket on battery side.

✓ The symbol lights up the battery state of charge as a percentage.

✓ The display shows the charging status.

➤ If charging the battery pack with a solar panel, observe the following requirements:
  - **Use without a solar controller:**
    Ensure that the solar panel outputs between 8 – 25 V DC and a maximum charging current of 10 A.
  - **Use with a solar controller:**
    Ensure the solar charger does not need a counter voltage from the battery side to start charging. Ensure that the maximum charging current is 10 A (check with the solar panel manufacturer).

6.4 Checking the charge level

➤ Press the power button (fig. 2 1, page 5).

✓ The display shows the battery state of charge as a percentage.

✓ The [- +] symbol flashes when the battery capacity is below 20 %.

6.5 Connecting consumer devices

fig. 2, page 7

➤ Open the cap for the desired device:
  - USB devices (**3**)
  - 2-pin 12 V DC socket outlet (**4**)
  - 12 V DC socket (**5**)

➤ Insert your device's plug into the corresponding socket.

✓ The [- +]➧ symbol and the related output symbol light up.

6.6 Replacing fuses

➤ Ensure that the battery pack is not connected to an AC/DC or a DC/DC charger.

➤ Disconnect all loads.

➤ Press the power button for at least 3 s to switch the battery pack off.

➤ Undo the fuse holder.

➤ Replace the fuse with a 20 A 3 AG glass-slow acting fuse.

7 Troubleshooting

Problem	Cause	Remedy
The battery pack does not start/function when pressing the power button.	The battery pack has shut down due to overtemperature (> 65 °C).	Connect the AC/DC charger to the battery pack. If the battery pack does not start up, press the reset button and hold it until for a few seconds.
	The battery is defective.	Contact a service center.
The display shows the warning symbol and the low / high temperature symbol flashes. An error sound is continuously beeping during charging.	The ambient temperature for charging the device is too low / high.	Stop charging the device. Turn the device off. Wait until the ambient temperature comes to a permitted value (chapter "Technical data" on page 15).
The display shows the warning symbol and the low / high temperature symbol flashes. The device beeps for 15 seconds and then switches off automatically during discharging.	The ambient temperature for discharging the device is too low / high.	Stop discharging the device. Turn the device off. Wait until the ambient temperature comes to a permitted value (chapter "Technical data" on page 15).
The display shows the warning symbol and the fuse blown symbol flashes. An error sound is continuously beeping for 30 seconds.	The DC output fuse has blown. Additionally the DC symbol flashes in the display.	Turn the device off. Change the DC fuse (chapter "Replacing fuses" on page 11).
	The 2-PIN fuse has blown. Additionally the 2-PIN symbol flashes in the display.	Turn the device off. Change the 2-PIN fuse (chapter "Replacing fuses" on page 11).
An error sound is continuously beeping (above 25 V). until pulling off the charger or fault release.	The input voltage of the charger is wrong.	Turn the charger off. Connect a charger with the standard charge voltage (chapter "Technical data" on page 15).

Problem	Cause	Remedy
The display shows the warning symbol and the charge arrow symbol flashes with audible alarm and stops after 30 seconds	The input voltage of the charger is wrong.	Turn the charger off. Connect a charger with the standard charge voltage (chapter "Technical data" on page 15).
No charge arrow is shown (under 5 V).	The input voltage of the charger is wrong.	Turn the charger off. Connect a charger with the standard charge voltage (chapter "Technical data" on page 15).
The display shows the warning symbol. The discharge arrow and either the USB or 2-pin or DC symbol flashes. An error sound is beeping for 60 seconds.	Over current protection was triggered.	Turn the device off. Release some of the load before switching the device on again.
	Short circuit protection was triggered.	Turn the device off. Clear the short circuit before switching the device on again.
The battery symbol is flashing. An error sound beeps every 3 seconds for 10 times. After the beeps the device switches off automatically.	The battery capacity is 0 %.	Charge the device.
The battery does not deliver power (without active turning on the device).	The battery does not deliver power until it is charged up to 10 % (SOC).	Charge the device.
The letters and symbols on the display are fading.	The display is overheated.	Place the battery pack in a cool environment.
	The display is defective.	Contact a service center.

8 Maintaining and cleaning the product

NOTICE! MATERIAL DAMAGE.

- Do not use sharp or hard objects or cleaning agents for cleaning as these may damage the product.
- Do not use alcohol based cleaning materials for cleaning the gloss top cover.
- Fully charge the lithium iron phosphate battery at least every six months. Overloading the battery or storing it for too long without charging it may cause permanent damage to the battery.

➤ Occasionally clean the product with a damp cloth.

9 Warranty

If the product does not work as it should, please contact your retailer or the manufacturer's branch in your country (see dometic.com/dealer). The warranty applicable to your product is 2 year(s).

For repair and warranty processing, please include the following documents when you send in the device:

- A copy of the receipt with purchasing date
- A reason for the claim or description of the fault

Australia only

Our goods come with guarantees that cannot be excluded under the Australian Consumer Law. You are entitled to a replacement or refund for a major failure and for compensation for any other reasonably foreseeable loss or damage. You are also entitled to have the goods repaired or replaced if the goods fail to be of acceptable quality and the failure does not amount to a major failure.

New Zealand only

This warranty policy is subject to the conditions and guarantees which are mandatory as implied by the Consumer Guarantees Act 1993(NZ).

10 Disposal

➤ Place the packaging material in the appropriate recycling waste bins wherever possible.

If you wish to finally dispose of the product, ask your local recycling centre or specialist dealer for details about how to do this in accordance with the applicable disposal regulations.

Protect the environment!

Do not dispose of any batteries with general household waste.
Return defective or used batteries to your retailer or dispose of them at collection points.

11 Technical data

	PLB 40
Battery type:	Lithium Iron Phosphate/LiFePO4
Battery rated capacity:	40 Ah
Rated battery voltage:	12.8 V⎓
Rated output current (derating of 5 % per channel/ per °C for temperatures above 40 °C: DC socket: 2-PIN socket: USB socket:	 15 A 15 A 2.4 A per socket, 4.2 A overall
Input voltage range:	8 – 25 V⎓
Maximum DC/DC charging current:	8 A
Lifecycle:	Potential lifecycle at 80 % depth of discharge (depending on charge cycle and storage condition) Up to 2000 charging cycles
Rated input voltage: Power supply unit / battery: PWM solar controller:	 12 V⎓ 14.6 V⎓
Cut off voltage:	10 – 11 V⎓

	PLB 40
Maximum self-discharge rate at 25 °C:	5 % per month
Ambient temperature for operation:	0 °C to +45 °C
Dimensions (L x W x H):	197 x 197 x 257 mm
Weight:	7.54 kg
Inspection/certification:	UN 38.3

Power supply unit

	PLB 40
AC Input: DC output:	100 – 240 V~ / 50/60 Hz, 2.5 A 12 V⎓, 10 A

Mobile living made easy.

DOMETIC

dometic.com

YOUR LOCAL DEALER

dometic.com/dealer

YOUR LOCAL SUPPORT

dometic.com/contact

YOUR LOCAL SALES OFFICE

dometic.com/sales-offices

4445102605 02/12/2020

A complete list of Dometic companies, which comprise the Dometic Group, can be found in the public filings of:
DOMETIC GROUP AB Hemvärnsgatan 15 SE-17154 Solna Sweden