DOMETIC

MOBILE COOLING
CFF

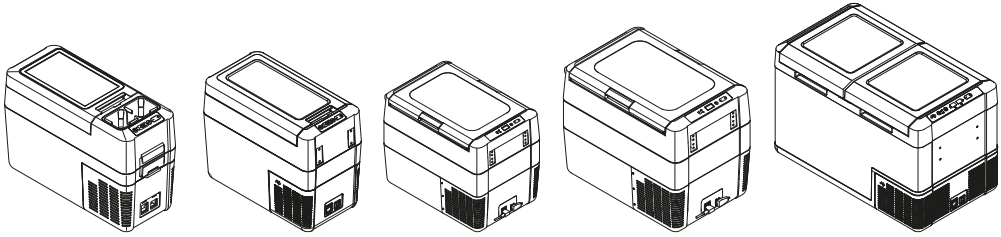

CFF12, CFF20, CFF35, CFF45, CFF70DZ

EN

Mobile refrigerating appliance

Operating manual

© 2022 Dometic Group. The visual appearance of the contents of this manual is protected by copyright and design law. The underlying technical design and the products contained herein may be protected by design, patent or be patent pending. The trademarks mentioned in this manual belong to Dometic Sweden AB. All rights are reserved.

Please read these instructions carefully and follow all instructions, guidelines, and warnings included in this product manual in order to ensure that you install, use, and maintain the product properly at all times. These instructions MUST stay with this product.

By using the product, you hereby confirm that you have read all instructions, guidelines, and warnings carefully and that you understand and agree to abide by the terms and conditions as set forth herein. You agree to use this product only for the intended purpose and application and in accordance with the instructions, guidelines, and warnings as set forth in this product manual as well as in accordance with all applicable laws and regulations. A failure to read and follow the instructions and warnings set forth herein may result in an injury to yourself and others, damage to your product or damage to other property in the vicinity. This product manual, including the instructions, guidelines, and warnings, and related documentation, may be subject to changes and updates. For up-to-date product information, please visit documents.dometic.com.

Contents

1 Explanation of symbols 3
2 Safety instructions 4
3 Scope of delivery 7
4 Intended use 8
5 Operation 12
6 Cleaning and maintenance 27
7 Troubleshooting 28
8 Warranty 30
9 Disposal 31
10 Technical data 31

1 Explanation of symbols

DANGER!
Safety instruction: Indicates a hazardous situation that, if not avoided, will result in death or serious injury.

WARNING!
Safety instruction: Indicates a hazardous situation that, if not avoided, could result in death or serious injury.

CAUTION!
Safety instruction: Indicates a hazardous situation that, if not avoided, could result in minor or moderate injury.

NOTICE!
Indicates a situation that, if not avoided, can result in property damage.

NOTE
Supplementary information for operating the product.

2 Safety instructions

DANGER! Failure to obey these warnings will result in death or serious injury.

Electrocution hazard

- On boats: If the device is powered by the mains, ensure that the power supply has a residual current circuit breaker.
- Do not touch exposed cables with your bare hands. This applies especially when operating the device from the AC mains.
- Before starting the device, ensure that the power supply line and the plug are dry.

WARNING! Failure to obey these warnings could result in death or serious injury.

Electrocution hazard

- Do not operate the cooling device if it is visibly damaged.
- If this cooling device's power cable is damaged, it must be replaced to prevent safety hazards.
- This cooling device may only be repaired by qualified personnel. Improper repairs can lead to considerable hazards.
- Plug the device to sockets that ensure proper connection especially when the device needs to be earthed.

Fire hazard

- When positioning the device, ensure the supply cord is not trapped or damaged.
- Do not locate multiple portable socket-outlets or portable power supplies at the rear of the device.
- Keep the ventilation openings on the device housing or in installations free of obstructions.

- Do not use any mechanical objects or other means to speed up the defrosting process, unless they have been recommended by the manufacturer for this purpose.
- Do not damage the refrigerant circuit.

Health hazard

- This device can be used by children aged from 8 years and above and persons with reduced physical, sensory or mental capabilities or lack of experience and knowledge if they have been given supervision or instruction concerning use of the device in a safe way and understand the hazards involved.
- Children shall not play with the device.
- Cleaning and user maintenance shall not be made by children without supervision.
- Children aged from 3 to 8 years are allowed to load and unload cooling devices.

Explosion hazard

- Do not store any explosive substances such as spray cans with a flammable propellant in the cooling device.

CAUTION! Failure to obey these cautions could result in minor or moderate injury.

Electrocution hazard

- Disconnect the cooling device from the power supply
  - before each cleaning and maintenance
  - after every use

Health hazard

To avoid contamination of food, please respect the following instructions:

- Please check if the cooling capacity of the device is suitable for storing the food or medicine you wish to cool.
- Food may only be stored in its original packaging or in suitable containers.
- Opening the cooling device for long periods can cause significant increase of the temperature in the compartments of the device.
- Clean regularly surfaces that can come in contact with food and accessible drainage systems.

- If the device is left empty for long periods:
  - Switch off the device.
  - Defrost the device.
  - Clean and dry the device.
  - Leave the lid open to prevent mold developing within the device.

NOTICE! Damage hazard

- Check that the voltage specification on the data plate corresponds to that of the energy supply.
- Only connect the cooling device as follows:
  - With the DC connection cable to a DC power supply in the vehicle
  - Or with the AC connection cable to an AC power supply
- Never pull the plug out of the socket by the cable.
- If the cooling device is connected to a DC outlet, disconnect the cooling device and other power consuming devices from the battery before connecting a quick charging device.
- If the cooling device is connected to a DC outlet, disconnect the cooling device or switch it off when you turn off the engine. Otherwise you may discharge the battery.
- The cooling device is not suitable for transporting caustic materials or materials containing solvents.
- The insulation of the cooling device contains flammable cyclopentane and requires special disposal procedures. Deliver the cooling device at the end of its life-cycle to an appropriate recycling center.
- Do not use electrical devices inside the cooling device unless they are recommended by the manufacturer for the purpose.
- Do not place the cooling device near naked flames or other heat sources (heaters, direct sunlight, gas ovens etc.).
- **Risk of overheating!**
  Ensure at all times that there is a minimum of 50 mm ventilation on all four sides of the cooling device. Keep the ventilation area free of any objects that could restrict the air flow to the cooling components.
  Do not place the cooling device in closed compartments or areas with none or minimal air flow.
- Ensure that the ventilation openings are not covered.
- Do not fill the inner container with ice or fluids.
- Never immerse the cooling device in water.
- Protect the cooling device and cables against heat and moisture.
- The device shall not to be exposed to rain.

3 Scope of delivery

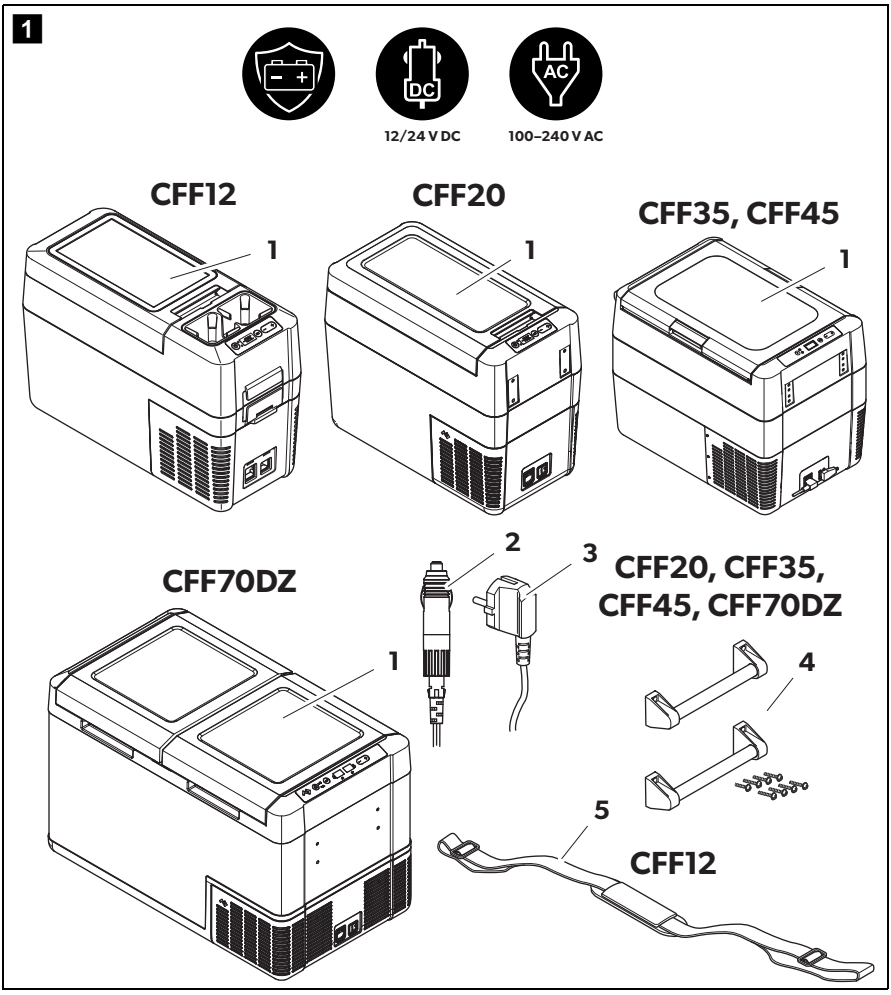

Item in fig. 1, page 7	Quantity	Description
1	1	Cooler
2	1	Connection cable for DC connection
3	1	Connection cable for AC connection

Item in fig. 1, page 7	Quantity	Description
4	1	CFF20, CFF35, CFF45, CFF70DZ only: Carry handle set, consisting of: • 4 holders • 2 handles • 8 fastening screws • 1 Allen wrench
5	1	CFF12 only: Shoulder strap
–	1	Operating manual

4 Intended use

The cooling device is suitable for cooling food. The cooling device is suitable for use in vehicles or on boats.

The cooling device is designed to be operated from a DC on-board power supply of a vehicle or boat, a DC auxiliary battery or from an AC power supply.

The cooling device is suitable for camping use.

The cooling device is intended to be used in household and similar applications such as

- Staff kitchen areas in shops, offices and other working environments
- Farm houses
- Clients in hotels, motels and other residential type environments
- Bed and breakfast type environments
- Catering and similar non-retail applications

This product is only suitable for the intended purpose and application in accordance with these instructions.

This manual provides information that is necessary for proper installation and/or operation of the product. Poor installation and/or improper operating or maintenance will result in unsatisfactory performance and a possible failure.

The manufacturer accepts no liability for any injury or damage to the product resulting from:

- Incorrect assembly or connection, including excess voltage

- Incorrect maintenance or use of spare parts other than original spare parts provided by the manufacturer
- Alterations to the product without express permission from the manufacturer
- Use for purposes other than those described in this manual

Dometic reserves the right to change product appearance and product specifications.

Function description

A low maintenance refrigerant circuit with compressor provides the cooling. The generous insulation and powerful compressor ensure efficient and fast cooling.

The cooler is portable.

The cooler can withstand a short-term inclination of 30°, for example on boats.

4.1 Scope of functions

- Power supply with priority circuit for connecting to the AC power supply
- Three-level battery monitor to protect the vehicle battery switches off automatically at low battery voltage
- Display with temperature gauge in °C and °F
- Temperature setting: With two buttons in steps of 1 °C (2 °F)
- Display dimming function with 3 brightness levels
- Removable cup holder (CFF12 only)
- Removable wire basket (CFF35, CFF45, CFF70DZ only)
- Removable carry handles (CFF20, CFF35, CFF45, CFF70DZ only)

4.2 Operating and display elements

Lid latches (fig. 2, page 10)

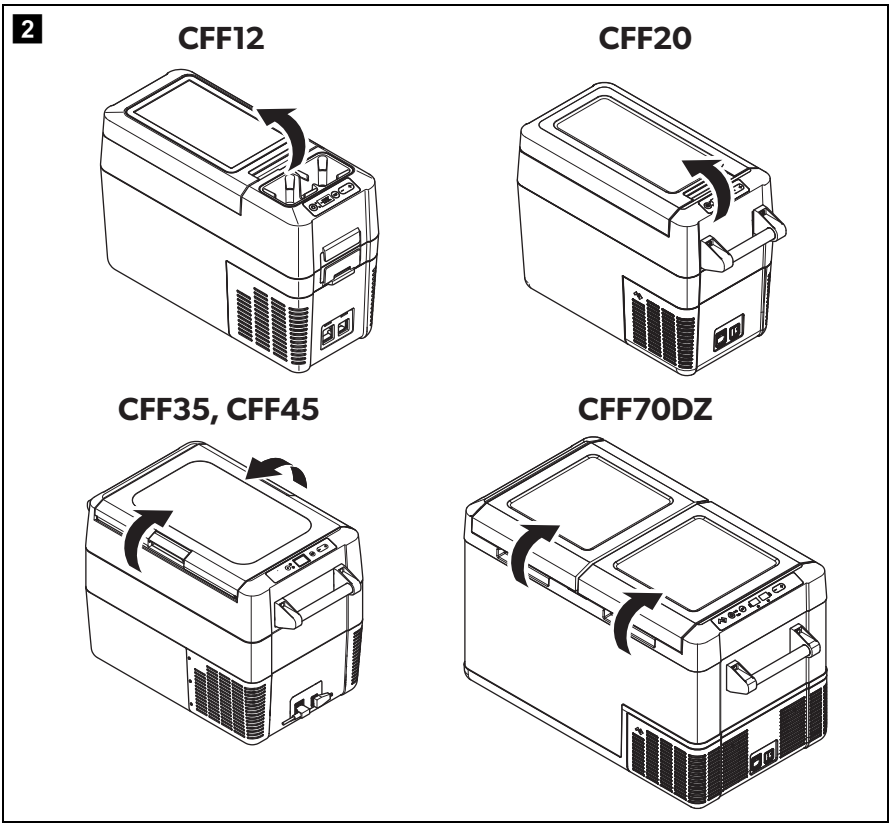

Operating panel (fig. 3, page 11)

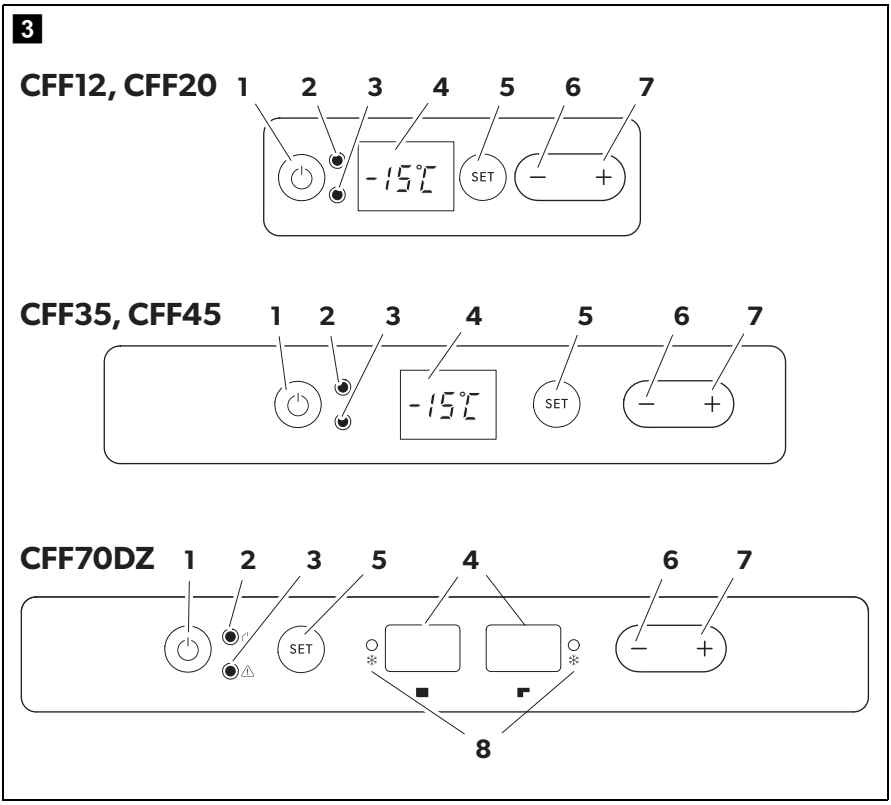

Item	Description	Explanation	
1	ON OFF	Switches the cooler on or off when the button is pressed for between one and two seconds	
2	POWER "⏻"	Status indication	
		LED lights up green:	Compressor is on
		LED lights up orange:	Compressor is off
		LED flashes orange:	Display switched off automatically due to low battery voltage
3	ERROR	LED flashes red:	Device is switched on but not ready for operation
4	–	Display, shows the information **CFF 70DZ only:** There's one display per zone	

Item	Description	Explanation
5	SET	Selects the input mode – Temperature setting – Celsius or Fahrenheit display – Set battery monitor – Set brightness of display
6	DOWN –	Press once to decrease the value
7	UP +	Press once to increase the value
8	❄	**CFF 70DZ only:** Status indication: LED lights up blue when the compartment is cooling

Connection sockets (fig. 4, page 12)

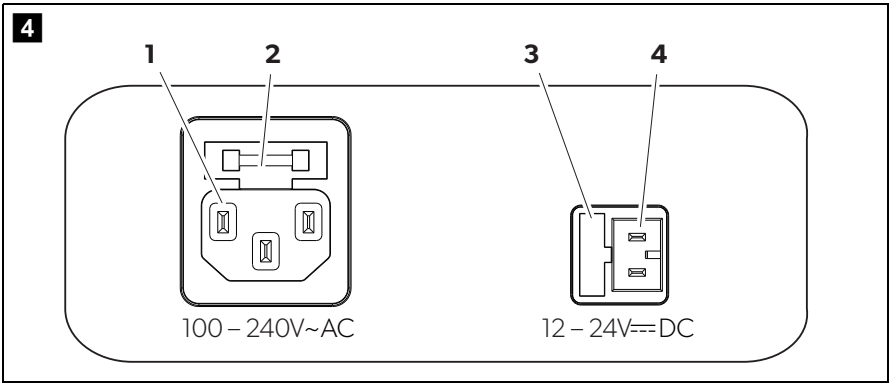

Item	Description
1	Connection socket AC voltage supply
2	AC fuse holder
3	DC fuse cover
4	Connection socket DC voltage supply

5 Operation

To avoid food waste, note the following:

- Keep temperature fluctuation as low as possible. Only open the cooling device as often and for as long as necessary. Store the foodstuff in such a way that the air can still circulate well.

- Adjust the temperature to the quantity and type of the foodstuff.
- Foodstuff can easily absorb or release odor or taste. Always store foodstuff covered or in closed containers/bottles.

5.1 Before initial use

NOTE
Before starting your new cooler for the first time, you should clean it inside and outside with a damp cloth for hygienic reasons (please also refer to the chapter "Cleaning and maintenance" on page 27).

Mounting the handles (CFF 20, CFF 35, CFF 45, CFF 70DZ only) (fig. 5, page 13)

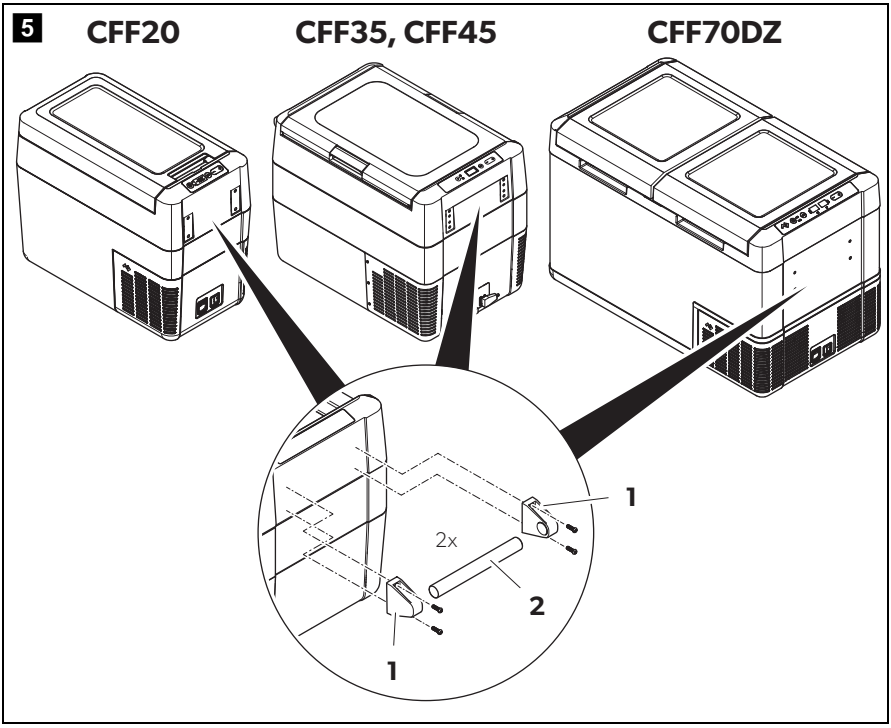

The handles are enclosed unassembled. If you wish to attach the handles, proceed as follows:

1. Assemble a handle by putting two holders (**1**) and a handle (**2**) together.
2. Fasten the holders with the enclosed screws in the holes provided.

Reversing the lid opening

➤ **CFF70DZ:** To reverse the lid opening, proceed as shown (fig. **6**, page 14).

6

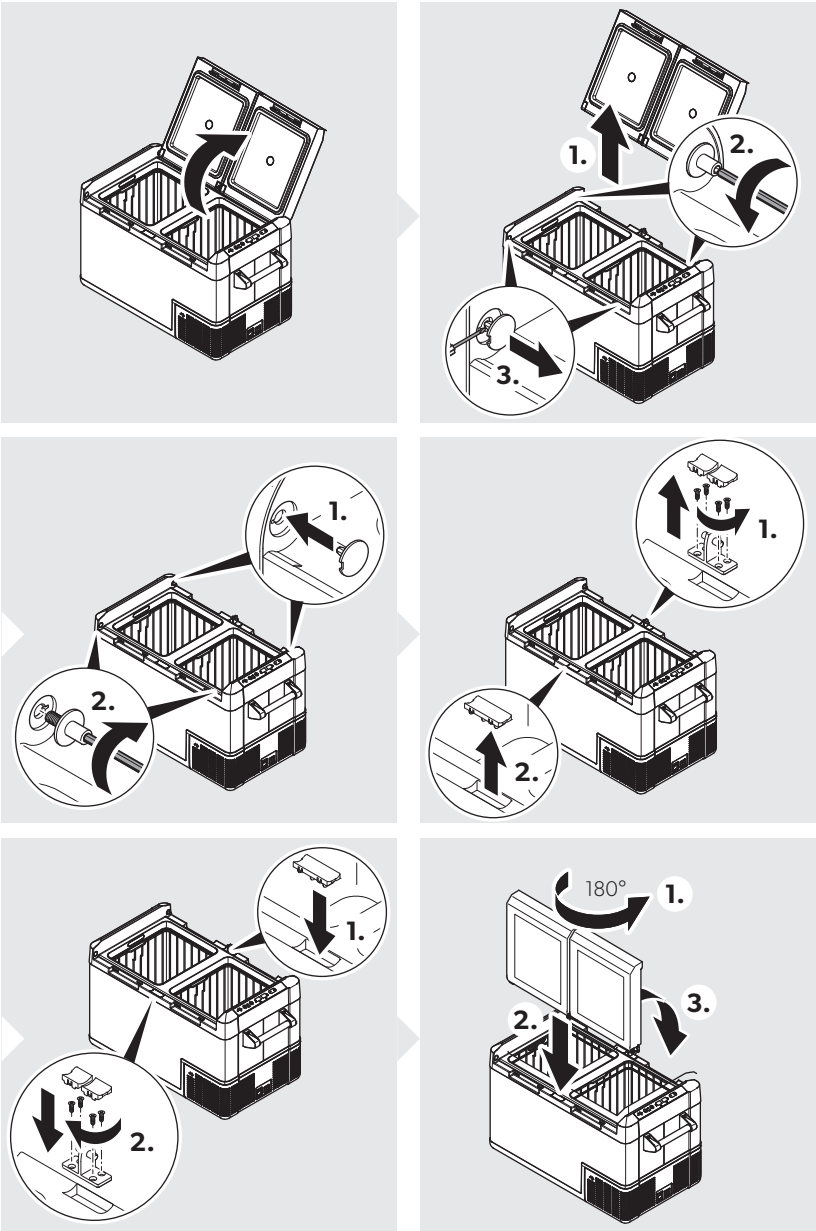

Opening or removing the lid (fig. 7, page 15)

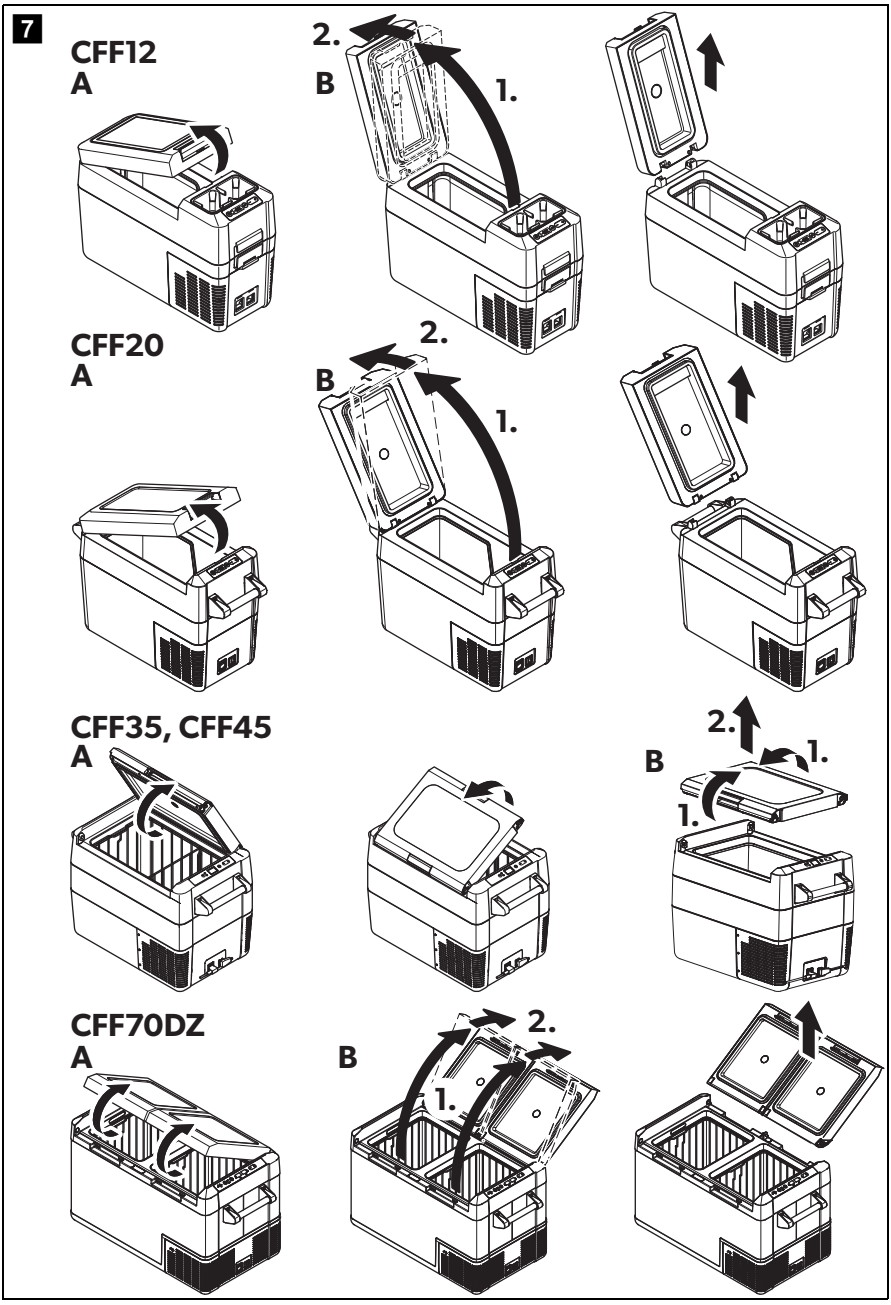

➤ To open the lid, unlatch (**A**).

CFF35, CFF45: The lid can be opened from either side.

➤ **CFF35, CFF45:** To remove the lid, unlatch both sides at the same time (**B**).
CFF12, CFF20, CFF70DZ: To remove the lid, push the lid beyond the lid stop position (**B**).

Lid stop position (fig. 8, page 16)

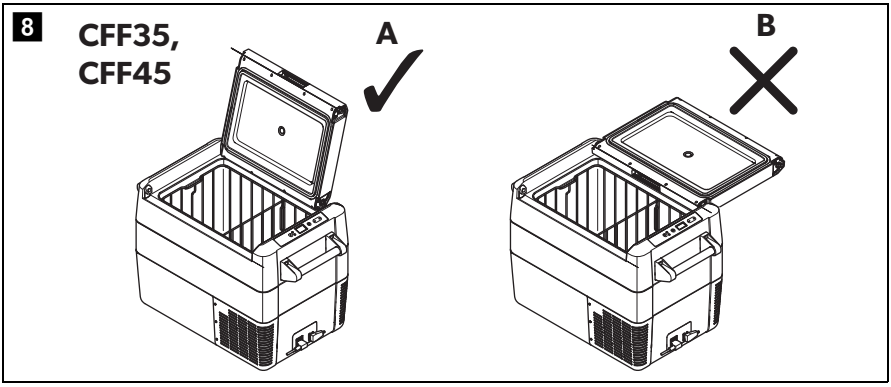

The lid has a built-in stop position (**A**). Do not force the lid past the built-in stop (**B**).

NOTICE! Damage hazard
CFF35, CFF45: If the lid has been forced too far, follow the steps described in the chapter "Lid past built-in stop (CFF35, CFF45 only)" on page 29.

Removing the cup holder (CFF12 only) (fig. 9, page 17)

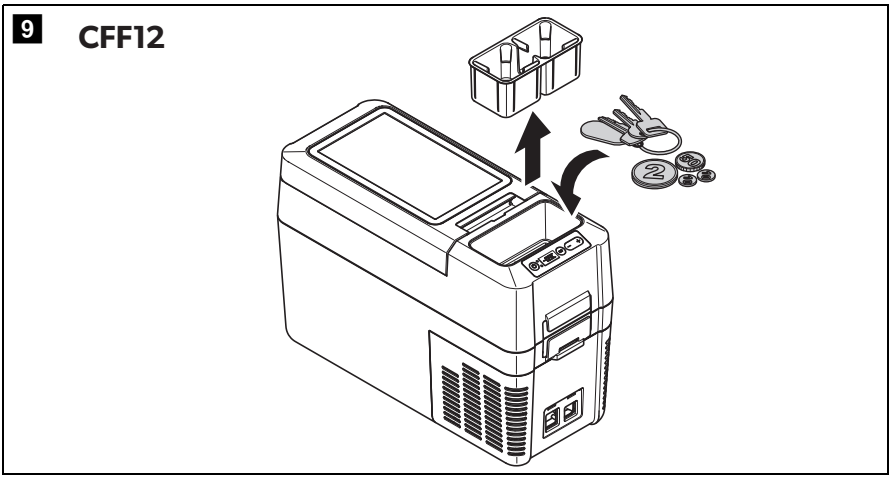

➤ Lift the cup holder out to access a convenient storage area.

Removing the basket (fig. 10, page 17 and fig. 12, page 23)

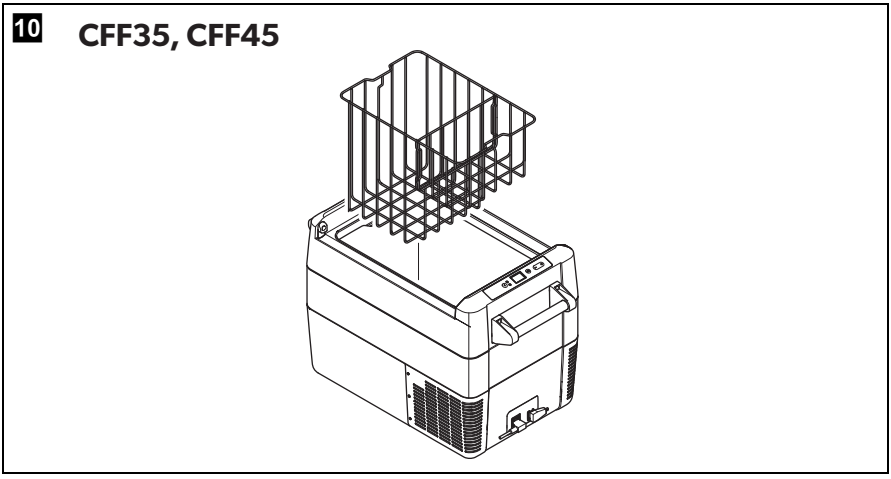

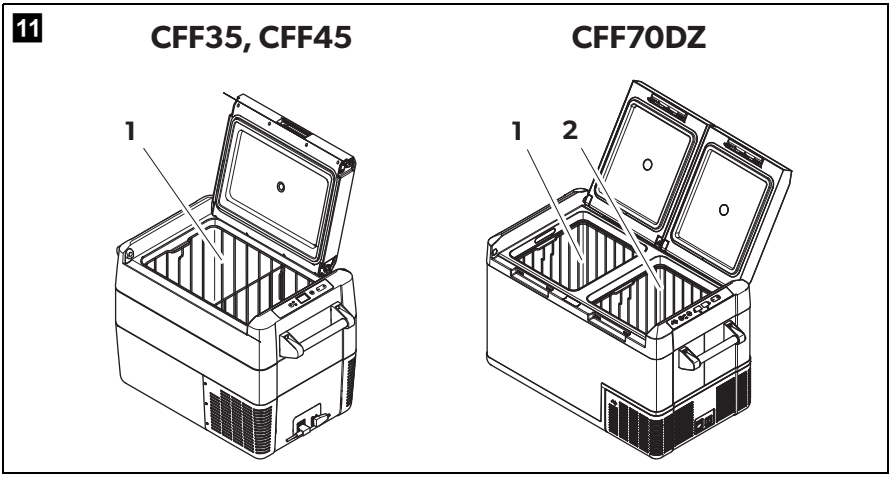

NOTICE! Damage hazard
Removing the basket with the lid open may scratch the lid and deform the basket. We recommend to remove the lid before removing the basket.

Selecting the temperature units

Temperature display units can be switched between Celsius and Fahrenheit as follows:

1. Switch on the cooler.
2. **CFF12, CFF20, CFF35, CFF45:** Press the "SET" button (fig. 3 5, page 11) twice.
   CFF70DZ: Press the "SET" button (fig. 3 5, page 11) three times.
3. Use the "UP +" (fig. 3 7, page 11) or "DOWN –" (fig. 3 6, page 11) buttons to select Celsius or Fahrenheit.

✓ The selected temperature unit then appears in the display for a few seconds. The display flashes several times before it returns to the current temperature.

5.2 Saving energy

- Choose a well ventilated location which is protected from direct sunlight.
- Allow warm food to cool down first before placing it in the cooling device to keep cool.
- Do not open the cooling device more often than necessary.
- Do not leave the cooling device open for longer than necessary.

- If the cooler has a basket: For optimal energy consumption, position the basket according to its position on delivery.
- On a regular basis, make sure the lid seal still fits properly.
- Defrost the cooler once a layer of ice forms.
- Avoid unnecessarily low temperatures.

5.3 Connecting the cooler

Connecting to a battery (vehicle or boat)

The cooler can be operated with 12 V or 24 V⎓.

NOTICE! Damage hazard
Disconnect the cooler and other consumer units from the battery before you connect the battery to a quick charging device.
Overvoltage can damage the electronics of the device.

For safety reasons the cooler is equipped with an electronic system to prevent polarity reversal. This protects the cooler against short-circuiting when connecting to a battery.

Using the fused DC plug

NOTICE! Damage hazard
For protection of the device the DC cable supplied includes a fuse inside the plug. Do **not** remove the fused DC plug.
Only use the DC cable supplied.

1. Plug the DC connection cable (fig. **1** 2, page 7) into the DC voltage socket of the cooler (fig. **4** 4, page 12).
2. Connect the connection cable to a DC power outlet.

Connecting to an AC power supply

DANGER! Electrocution hazard
Failure to obey these warnings will result in death or serious injury.
- Never handle plugs and switches with wet hands or if you are standing on a wet surface.
- If you are operating your cooler on board a boat from a AC power supply, you must install a residual current circuit breaker between the AC power supply and the cooler.
  Seek advice from a trained technician.

The coolers have an integrated multi-voltage power supply with priority circuit for connecting to an AC voltage source. The priority circuit automatically switches the cooler to AC operation if the device is connected to an AC power supply, even if the DC connection cable is still attached.

When switching between the AC power supply and the battery supply, the red LED may light up briefly.

1. Plug the AC connection cable (fig. 1 3, page 7) into the AC voltage socket of the cooler (fig. 4 1,page 12).
2. Connect the connection cable to an AC power outlet.

5.4 Using the battery monitor

The device is equipped with a multi-level battery monitor that protects your vehicle battery against excessive discharging when the device is connected to the on-board DC supply.

If the cooler is operated when the vehicle ignition is switched off, the cooler switches off automatically as soon as the supply voltage falls below a set level. The cooler will switch back on once the battery has been recharged to the restart voltage level.

NOTICE! Damage hazard
When switched off by the battery monitor, the battery will no longer be fully charged. Avoid starting repeatedly or operating current consumers without longer charging phases. Ensure that the battery is recharged.

In "HIGH" mode, the battery monitor responds faster than at the levels "LOW" and "MED" (see the following table).

Battery monitor mode	LOW	MED	HIGH
Switch-off voltage at 12 V	10.1 V	11.2 V	11.8 V
Restart-voltage at 12 V	11.4 V	12.2 V	12.6 V
Switch-off voltage at 24 V	21.5 V	24.1 V	24.6 V
Restart voltage at 24 V	23.0 V	25.3 V	26.2 V

The battery monitor mode can be selected as follows:

1. Switch on the cooler.
2. Press the "SET" button (fig. 3 5, page 11):
   - **CFF12, CFF20, CFF35, CFF45:** Three times.
   - **CFF70DZ:** Four times.
3. Use the "UP +" (fig. 3 7, page 11) or "DOWN –" (fig. 3 6, page 11) buttons to select the battery monitor mode.

✓ Display will be as follows:
Lo (LOW), ΠEd (MED), Hi (HIGH)

✓ The selected mode then appears in the display for a few seconds. The display flashes several times before it returns to the current temperature.

NOTE
When the cooler is supplied by the starter battery, select the battery monitor mode "HIGH". If the cooler is connected to a supply battery, the battery monitor mode "LOW" will suffice.

5.5 Using the cooler

NOTICE! Overheating hazard
Ensure at all times that there is sufficient ventilation so that the heat that generated during operation can dissipate. Ensure that the ventilation slots are not covered. Make sure that the device is sufficiently far away from walls and other objects so that the air can circulate.

1. Place the cooler on a firm foundation.
   Make sure that the ventilation slots are not covered and that the heated air can dissipate. We recommend keeping a gap of at least 50 mm around ventilation holes.

NOTICE! Damage hazard
Place the cooler as shown (fig. 1, page 7). If you operate the cooler in a different orientation it can be damaged.

2. Connect the cooler (see chapter "Connecting the cooler" on page 19).

NOTICE! Excessively low temperature hazard
Ensure that the only those objects are placed in the cooler that are intended to be cooled at the selected temperature.

3. Press the "ON/OFF" button (fig. 3 1, page 11) for between one and two seconds.

✓ The LED "⏻" lights up (fig. 3 2, page 11).

✓ The display (fig. 3 4, page 11) switches on and shows the current temperature.

✓ The cooler starts cooling the interior.

NOTE
When operating from a battery, the display switches off automatically if the battery voltage is low. The LED "⏻" flashes orange.

Latching the cooler lid

1. Close the lid.
2. Press the latch (fig. 2, page 10) down, until it latches in place audibly.

NOTE
CFF35, CFF45: When latching the lid, ensure that both latch side pins are fully engaged to ensure a good lid seal. One latch may engage slightly before the other.
If the lid is not closed equally at both sides, press until a second click is heard.

5.6 Fixing the cooler while transporting (CFF12)

When transporting the cooler in a vehicle, you can fix the device with the safety seat belt or with luggage tighteners so that it remains in its position.

WARNING!
Make sure that the cooler is fixed correctly. Otherwise it could be dislodged and cause severe injuries to passengers when a hard break occurs.

Fixing with a safety seat belt

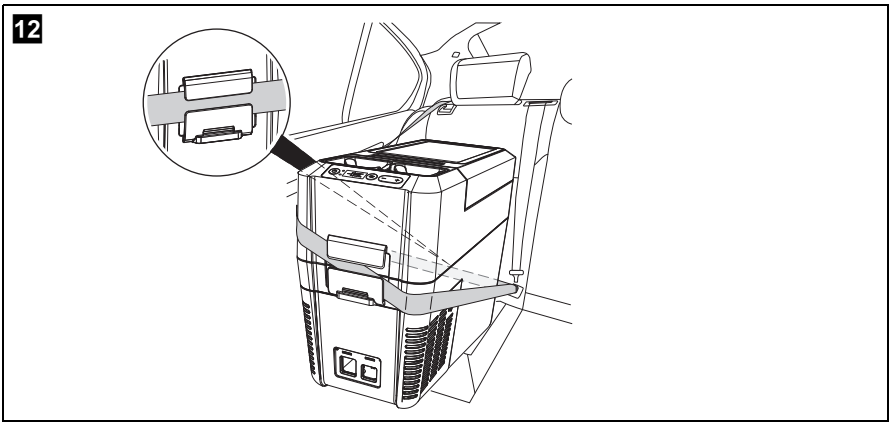

➤ Proceed as shown (fig. 12, page 23).

Fixing with luggage tighteners

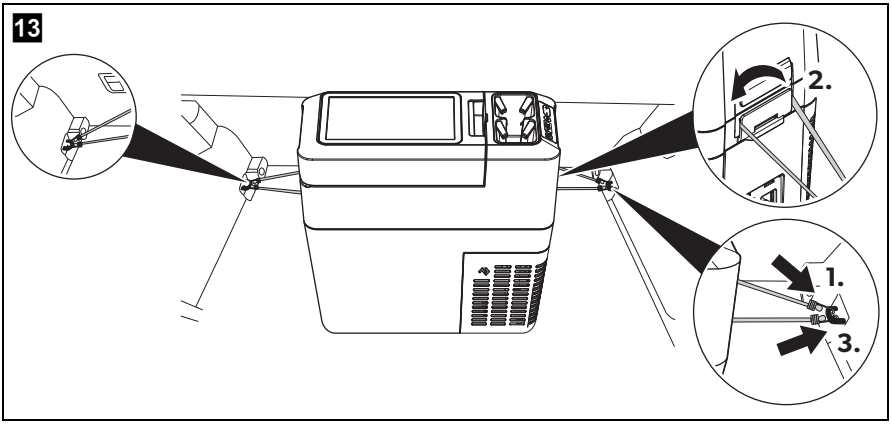

➤ Proceed as shown (fig. 13, page 23).

5.7 Setting the temperature

CFF12, CFF20, CFF35, CFF45

1. Press the "SET" button (fig. 3 5, page 11) once.
2. Use the "UP +" (fig. 3 7, page 11) and "DOWN –" (fig. 3 6, page 11) buttons to select the cooling temperature.

✓ The cooling temperature appears in the display for a few seconds. The display flashes several times and then the current temperature is displayed again.

CFF70DZ

1. Press the "SET" button (fig. 3 5, page 11):
   – once for the large compartment
   – twice for the small compartment

✓ The chosen compartment's display blinks.

2. Use the "UP +" (fig. 3 7, page 11) and "DOWN –" (fig. 3 6, page 11) buttons to select the cooling temperature.

   Each compartment can be set to work as a refrigerator or a freezer compartment.

✓ The cooling temperature appears in the chosen compartment's display for a few seconds. The display flashes several times and then the current temperature is displayed again.

5.8 Switching a compartment off or on (CFF70DZ)

If only one compartment is required, the other compartment can be switched off to save energy.

Switching off a compartment

If the display of the compartment shows a temperature, you can switch off the compartment as follows:

1. Press the "SET" button (fig. 3 5, page 11):
   – Once for the large compartment
   – Twice for the small compartment

✓ The display of the respective compartment blinks.

2. Press the "ON/OFF" button (fig. 3 1, page 11).

✓ "OFF" flashes for five seconds on the display of the respective cooling compartment, then "OFF" is displayed.

Switching on a compartment

If the display of the compartment shows "OFF", you can switch on the compartment as follows:

1. Press the "SET" button (fig. 3 5, page 11):
   – Once for the large compartment
   – Twice for the small compartment

✓ The display of the respective compartment blinks.

2. Press the "ON/OFF" button (fig. 3 1, page 11).

✓ The cooling temperature appears in the display for a few seconds. The display flashes several times and then the current temperature is displayed.

5.9 Setting the display brightness

The display brightness can be dimmed for low ambient light conditions. To set the dimming level of the display proceed as follows:

1. Switch on the cooler.
2. Press the "SET" button (fig. 3 5, page 11):
   - **CFF12, CFF20, CFF35, CFF45:** Four times.
   - **CFF70DZ:** Five times.
3. Use the "UP +" (fig. 3 7, page 11) or "DOWN –" (fig. 3 6, page 11) buttons to set the brightness of the display.

✓ Display will be as follows:
d0 (default), d1 (medium), d2 (dark)

✓ The display shows the set mode for several seconds. The display flashes twice before it returns to the current temperature.

NOTE
- The factory setting of brightness of the display is d0 (default).
- If a fault occurs, the brightness automatically reverts to brightness d0 (default). After troubleshooting the set brightness is reactivated.

5.10 Switching off the cooler

1. Empty the cooler.
2. Switch the cooler off.
3. Pull out the connection cable.

If you do not want to use the cooler for a longer period of time:

➤ Leave the lid slightly open. This prevents odor build-up.

5.11 Defrosting the cooler

Humidity can form frost in the interior of the cooler or on the evaporator. This reduces the cooling capacity.

NOTICE! Damage hazard
Never use hard or pointed tools to remove ice or to loosen objects which have frozen in place.

To defrost the cooler, proceed as follows:

1. Take out the contents of the cooler.
2. If necessary, place them in another cooling device to keep them cool.
3. Switch off the device.
4. Leave the lid open.
5. Wipe off the defrosted water.

5.12 Replacing the AC fuse

DANGER! Electrocution hazard
Failure to obey this warning will result in death or serious injury. Disconnect the power supply and the connection cable before you replace the device fuse.

1. Disconnect the power supply to the device.
2. Remove the connection cable.
3. Pry out the fuse insert (fig. 4 2, page 12) with a screwdriver.
4. Replace the defective glass fuse with a new one that has the same type and rating (4 A, 250 V).
5. Press the fuse insert back into the housing.
6. Reconnect the power supply to the device.

5.13 Replacing the device DC fuse

1. Disconnect the power supply to the device.
2. Pry out the fuse cover (fig. 4 3, page 12) to access the fuse.
3. Reverse the fuse cover and use the hook to remove the fuse.
4. Replace the defective fuse with a new fuse of the same type (Automotive Standard blade fuse, 10 A).
5. Re-fit the fuse cover.
6. Reconnect the power supply to the device.

5.14 Replacing the DC plug fuse

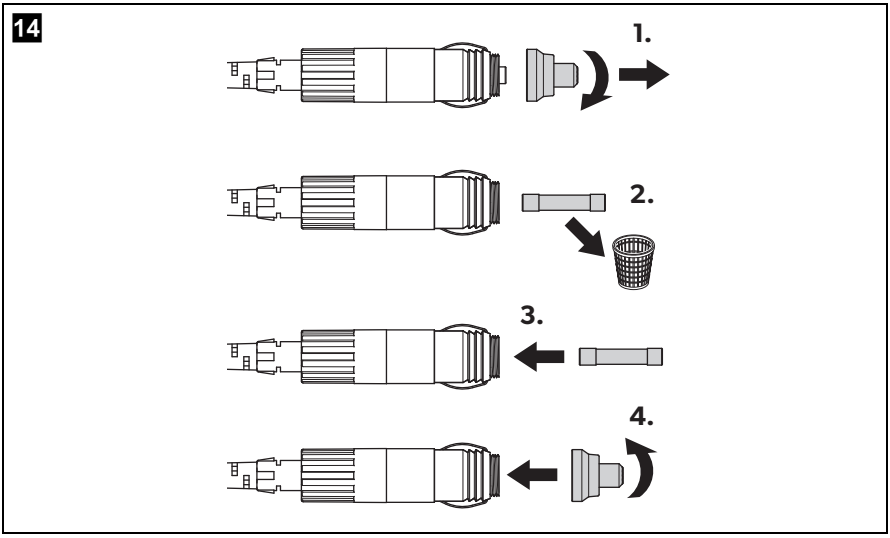

➤ Replace the DC plug fuse as shown in fig. 14, page 27.

5.15 Replacing the light PCB

NOTICE! Damage hazard
The lamp can only be replaced by the manufacturer, a service agent or similarly qualified person to avoid hazard.

6 Cleaning and maintenance

WARNING! Electrocution hazard
Failure to obey this warning could result in death or serious injury. Always disconnect the device from the power supply before you clean and service it.

NOTICE! Damage hazard
- Never clean the cooling device under running water or in dish water.
- Do not use abrasive cleaning agents or hard objects during cleaning as these can damage the cooling device.

➤ Occasionally clean the cooling device interior and exterior with a damp cloth.

➤ Make sure that the air inlet and outlet vents on the device are free of any dust and dirt, so that heat can be released and the device is not damaged.

7 Troubleshooting

Problem	Possible cause	Remedy
Device does not function, LED does not glow.	No voltage present in the connected power outlet.	Plugged in DC power outlet: In most vehicles the ignition must be turned on before power will be supplied to the DC power outlet. Plugged in AC power outlet: Try using another plug outlet.
	One of the device fuses is defective.	Replace the defective device fuse, see chapter "Replacing the AC fuse" on page 26 or chapter "Replacing the device DC fuse" on page 26.
	The integrated AC adapter is defective.	This can only be repaired by an authorized repair center.
The device does not cool (plug is inserted, "POWER" LED is lit).	Defective compressor.	This can only be repaired by an authorized repair center.
The device does not cool (plug is inserted, "POWER" LED flashes orange, display is switched off).	Battery monitor is set too high.	Select a lower battery monitor setting.
	Battery voltage is too low.	Test the battery and charge it as needed.

Problem	Possible cause	Remedy
When operating from the DC outlet: The ignition is on and the device is not working and the LED is not lit.	The DC outlet is dirty. This results in a poor electrical contact.	If the plug of your cooler becomes very warm in the DC outlet, either the DC outlet must be cleaned or the plug has not been assembled correctly.
	The fuse of the DC plug has blown.	Replace the fuse in the DC plug, see chapter "Replacing the DC plug fuse" on page 27.
	The device DC fuse has blown.	Replace the defective fuse, see chapter "Replacing the device DC fuse" on page 26.
	The vehicle fuse has blown.	Replace the vehicle's DC outlet fuse. Please refer to your vehicle's operating manual.
The display shows an error message (e.g. "Err1") and the appliance does not cool.	The appliance has switched off due to an internal fault.	This can only be repaired by an authorized repair center.

7.1 Lid past built-in stop (CFF35, CFF45 only)

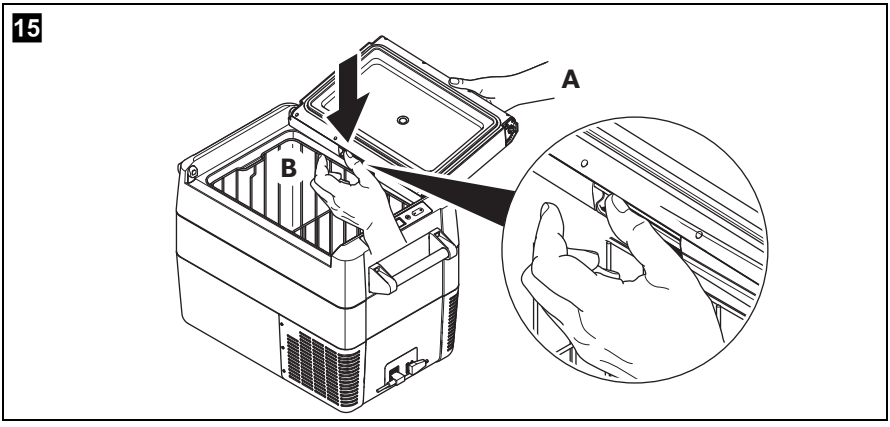

If the lid has been forced past the built-in stop, proceed as follows (fig. 15, page 29):

➤ Support the lid with one hand (**A**).

➤ Hold the latch down with the other hand (**B**).

CAUTION! Health hazard
Failure to obey this caution could result in minor or moderate injury.
Beware pinching your thumb while closing the lid.

NOTICE! Damage hazard
Failure to observe this instruction can cause the lid to break off.

➤ Close the lid as far as possible without pinching your thumb, while still holding the latch down, to keep it from breaking.

✓ The lid should now be approximately at the angle shown (fig. **15**, page 29).

➤ Remove the hand from the latch (**B**), and continue closing the lid all the way.

NOTE
The hinges may release from the correct position during the final closing action. Reposition the lid as follows:
- Operate the latches on both sides of the lid simultaneously.
- Lift and reposition the lid.

8 Warranty

If the product does not work as it should, please contact your retailer or the manufacturer's branch in your country (see dometic.com/dealer). The warranty applicable to your product is 3 year(s).

For repair and warranty processing, please include the following documents when you send in the device:

- A copy of the receipt with purchasing date
- A reason for the claim or description of the fault

Australia only

Our goods come with guarantees that cannot be excluded under the Australian Consumer Law. You are entitled to a replacement or refund for a major failure and for compensation for any other reasonably foreseeable loss or damage. You are also entitled to have the goods repaired or replaced if the goods fail to be of acceptable quality and the failure does not amount to a major failure.

New Zealand only

This warranty policy is subject to the conditions and guarantees which are mandatory as implied by the Consumer Guarantees Act 1993(NZ).

Local support

Please find local support at the following link address: dometic.com/dealer

9 Disposal

Recycling products with non-replaceable batteries, rechargeable batteries or light sources

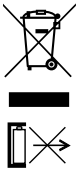

- ➤ If the product contains any non-replaceable batteries, rechargeable batteries or light sources, you don't have to remove them before disposal.
- ➤ If you wish to finally dispose of the product, ask your local recycling center or specialist dealer for details about how to do this in accordance with the applicable disposal regulations.
- ➤ The product can be disposed free of charge.

Recycling packaging material

- ➤ Place the packaging material in the appropriate recycling waste bins wherever possible.

10 Technical data

	CFF12	CFF20	CFF35
Total volume:	13 l	21 l	34 l
Connection voltage:	12/24 V⎓ 100 to 240 V∼		
Rated current:	12 V⎓: 6 A 24 V⎓: 3.3 A 240 V∼ : 0.35 A	12 V⎓: 6.5 A 24 V⎓: 3.4 A 240 V∼ : 0.38 A	12 V⎓: 7.8 A 24 V⎓: 3.5 A 240 V∼ : 0.40 A
Cooling capacity:	+10 °C to –18 °C (+50 °F to 0 °F)		
Climate class:	N, T		
Ambient temperature:	+16 °C to +43 °C (+60 °F to +110 °F)		
Refrigerant:	R134a		
Refrigerant volume:	26 g	28 g	34 g
CO_2 equivalent:	0.037 t	0.040 t	0.049 t

	CFF12	**CFF20**	**CFF35**
Global warming potential (GWP):	1430		
Noise emission:	44 dB (A)	48 dB (A)	45 dB (A)
Dimensions (W x H x D) (including handles): (W x H x D) (without handles):	– 235 x 380 x 562 mm	283 x 430 x 660 mm 283 x 430 x 533 mm	715 x 407 x 398 mm 590 x 500 x 443 mm
Weight:	9.5 kg	10.8 kg	17.6 kg

	CFF45	**CFF70DZ**
Total volume:	44 l	70 l (30 l/40 l)
Connection voltage:	12/24 V⎓ 100 to 240 V~	
Rated current:	12 V⎓: 8.6 A 24 V⎓: 3.8 A 240 V~ : 0.41 A	12 V⎓: 9.0 A 24 V⎓: 4.0 A 240 V~ : 0.44 A
Cooling capacity:	+10 °C to –18 °C (+50 °F to 0 °F)	
Climate class:	N, T	
Ambient temperature:	+16 °C to +43 °C (+60 °F to +110 °F)	
Refrigerant:	R134a	
Refrigerant volume:	43 g	34 g
CO_2 equivalent:	0.061 t	0.049 t
Global warming potential (GWP):	1430	
Noise emission:	47 dB (A)	48 dB (A)
Dimensions (W x H x D) (including handles): (W x H x D) (without handles):	715 x 475 x 398 mm 590 x 475 x 398 mm	914 x 500 x 443 mm 785 x 500 x 443 mm
Weight:	18.9 kg	26.4 kg

NOTE
If the ambient temperature is above +32 °C (+90 °F), the minimum temperature cannot be attained.

Test/certificates:

This product contains fluorinated greenhouse gases.

The cooling unit is hermetically sealed.

dometic.com

YOUR LOCAL DEALER

dometic.com/dealer

YOUR LOCAL SUPPORT

dometic.com/contact

YOUR LOCAL SALES OFFICE

dometic.com/sales-offices

4445103133 2022-09-16

A complete list of Dometic companies, which comprise the Dometic Group, can be found in the public filings of:
DOMETIC GROUP AB Hemvärnsgatan 15 SE-17154 Solna Sweden