FRONT RUNNER

PRO WATER TANK MOUNTING SYSTEM 20L

ENG

WTAN070

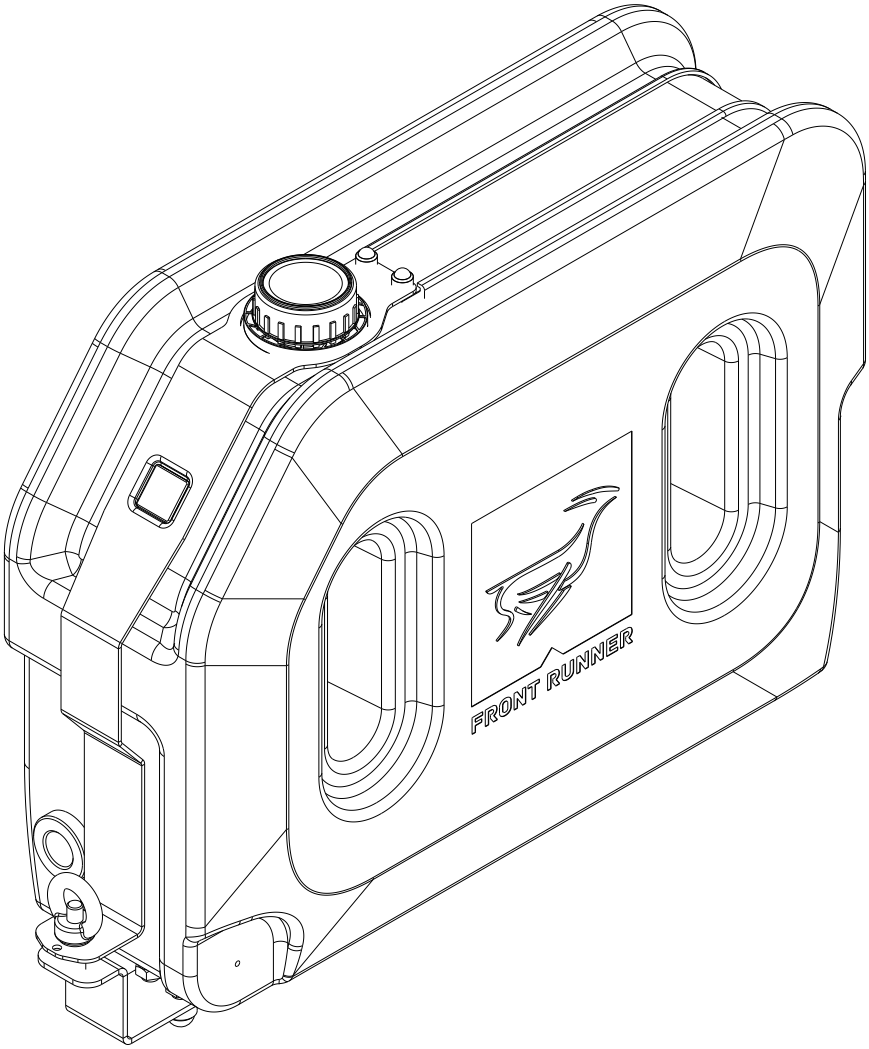

READ ME !

Thank you for purchasing a Front Runner 20L Pro Water Tank Mounting System.

Before you start, take a moment to familiarize yourself with the Fitting Instructions and the included components.

Refer to Page 2 for a list of all the components, quantities and tools required.

IMPORTANT WARNING!

IT IS CRITICAL THAT ALL FRONT RUNNER PRODUCTS BE PROPERLY AND SECURELY ASSEMBLED AND ATTACHED TO YOUR VEHICLE. IMPROPER ATTACHMENT COULD RESULT IN AN AUTOMOBILE ACCIDENT, AND COULD CAUSE SERIOUS BODILY INJURY OR DEATH. YOU ARE RESPONSIBLE FOR ASSEMBLING AND SECURING ALL FRONT RUNNER PRODUCTS TO YOUR VEHICLE, CHECKING THE ATTACHMENTS PRIOR TO USE, AND PERIODICALLY INSPECTING THE PRODUCTS FOR ADJUSTMENT, WEAR AND DAMAGE. THEREFORE, YOU MUST READ AND UNDERSTAND ALL OF THE INSTRUCTIONS AND PRECAUTIONS SUPPLIED WITH YOUR FRONT RUNNER PRODUCT PRIOR TO INSTALLATION OR USE. IF YOU DO NOT UNDERSTAND ALL OF THE INSTRUCTIONS AND CAUTIONS, OR IF YOU HAVE NO MECHANICAL EXPERIENCE AND ARE NOT THOROUGHLY FAMILIAR WITH THE INSTALLATION PROCEDURES, YOU SHOULD HAVE THE PRODUCT INSTALLED BY A PROFESSIONAL INSTALLER OR OTHER QUALIFIED PERSONNEL.

NOTE: Front Runner will not be responsible for any damage caused by the failure to install the product according to these instructions.

Please call us if you have any questions about the installation of this product.

 © 2022 FRONT RUNNER VEHICLE OUTFITTERS

1 GET ORGANIZED

IN THE BOX

1	1 X	Strap Rubber
2	1 X	Rear Strap
3	1 X	Front Strap
4	1 X	Z - Bracket
5	1 X	Rear Mount Bracket
6	1 X	M5 Nut Cap
7	1 X	M5 Nyloc Nut
8	1 X	M5 x 10 Button Head Bolt
9	1 X	Eye Nut
10	1 X	Nylon Washer
11	2 X	M8 Thin Nut
12	1 X	M8 x 25 Hex Bolt
13	2 X	M8 Nut Cap

IN THE BOX

14	1 X	M8 Nyloc Nut
15	2 X	M8 x 20 Hex Bolt
16	1 X	M8 x 16 Button Head Bolt
17	1 X	M6 Nyloc Nut
18	1 X	M6 x 12 x 1 Flat Washer
19	1 X	T-Slot Rubber
20	1 X	20L Water Tank

TOOLS NEEDED

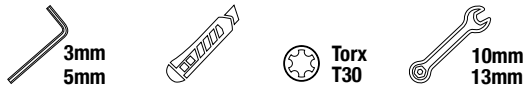

FIGURE 1.1

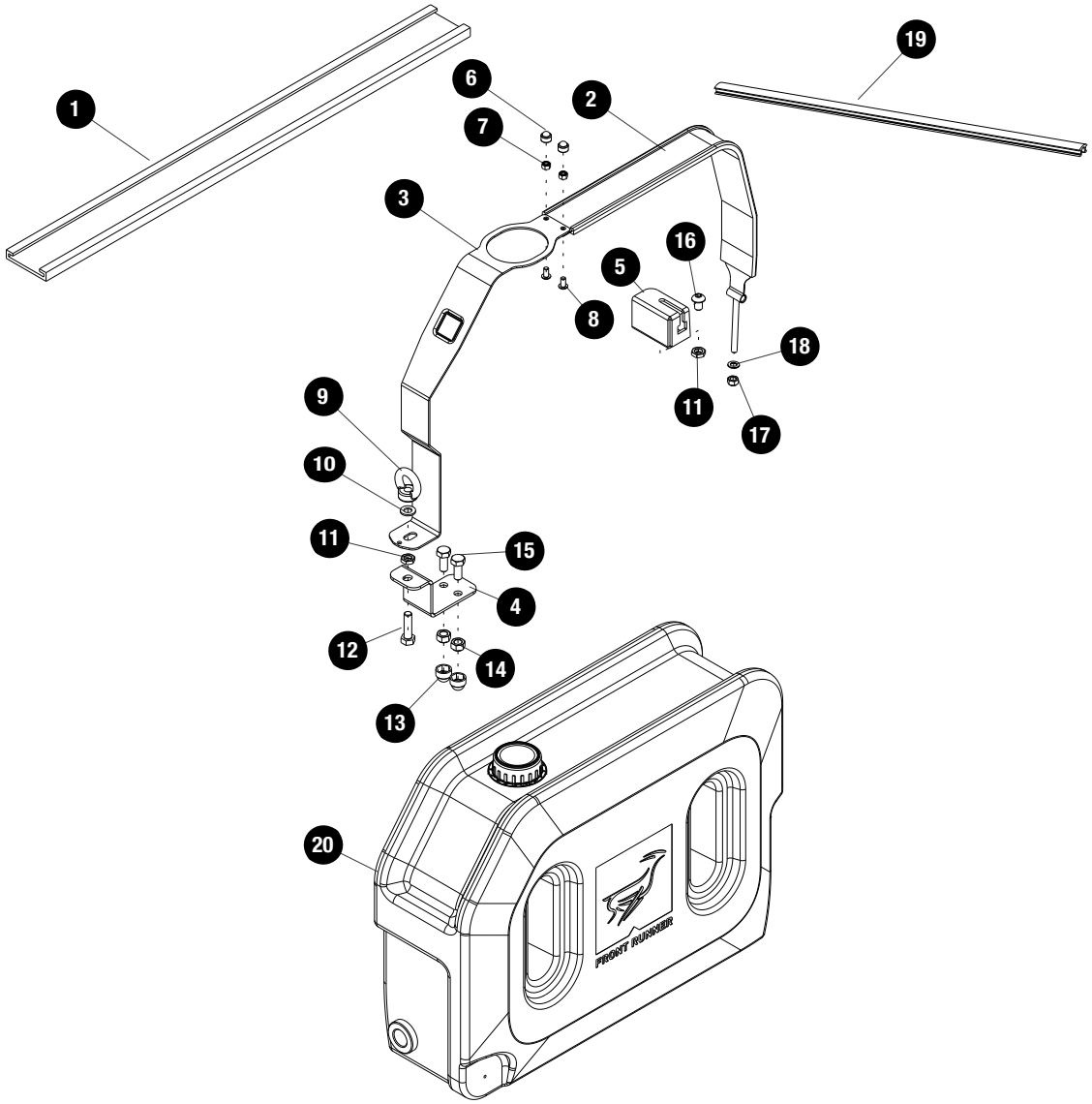

 © 2022 FRONT RUNNER VEHICLE OUTFITTERS

2 FIT AND SECURE

Strap Assembly

2.1

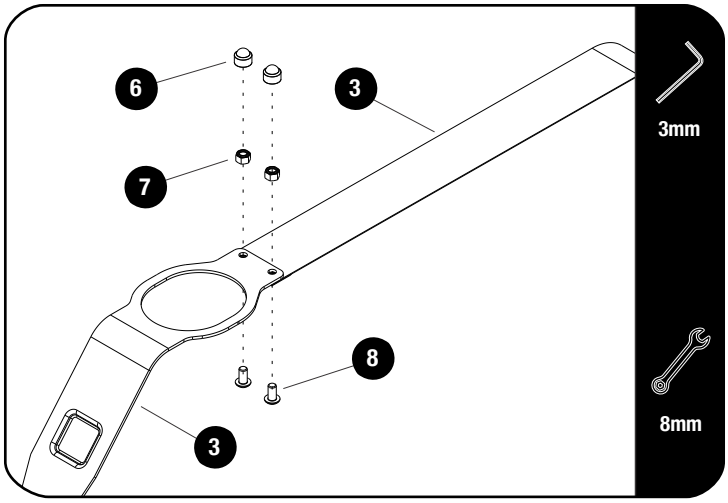

Assemble the Front and Rear Straps using M5 x 10 Button Head Bolts and M5 Nyloc Nuts (Items 7 & 8) as shown.

Place M5 Nut Caps on the Nyloc Nuts.

2.2

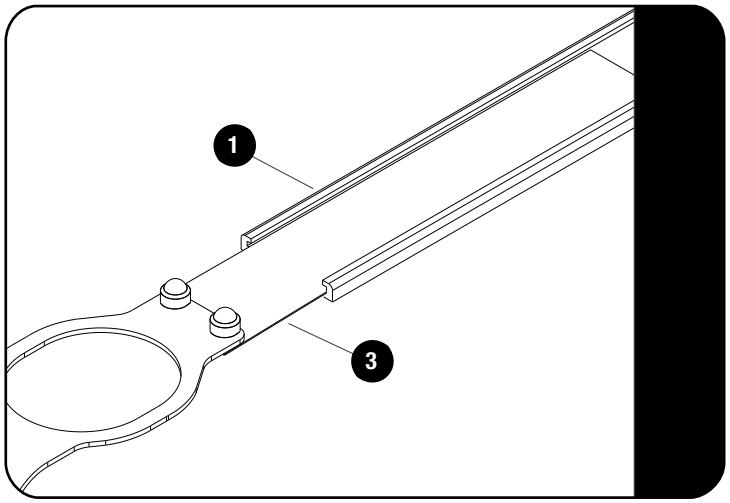

Slide the Strap Rubber (Item 1) over the Rear Strap (Item 3) as shown.

2.3

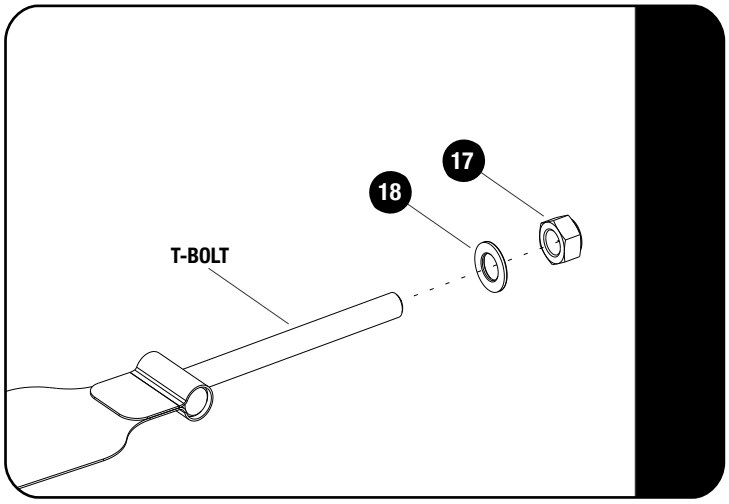

Loosely fit the M6 Nyloc Nut and M6 x 12 x 1 Flat Washer (Items 17 & 18) to the T-Bolts at the ean for the Rear Strap as shown.

© 2022 FRONT RUNNER VEHICLE OUTFITTERS

3 FIT AND SECURE

SLII SIDE PROFILE FITMENT

3.1

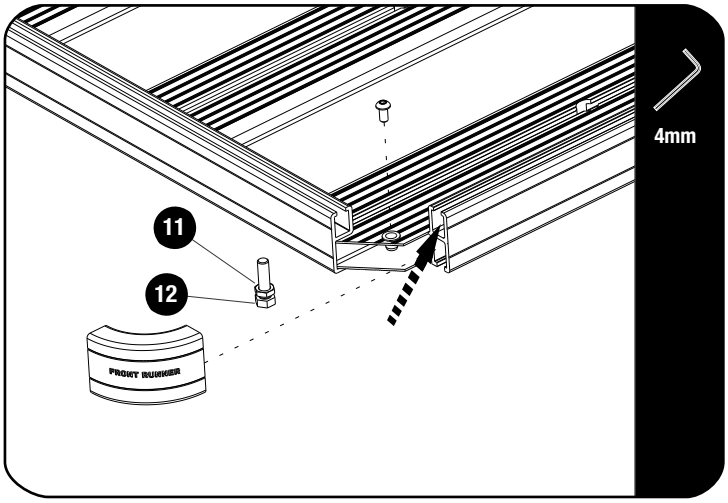

Choose where you would like to mount your Pro Water Tank, on your Front Runner Rack.

Assemble the M8 x 30 Hex Bolt and M8 Thin Nut (Items 11 & 12) as shown.

Loosen the rack corner and slide this assemble into the chosen combined slats T-slot.

Refit the Corner.

3.2

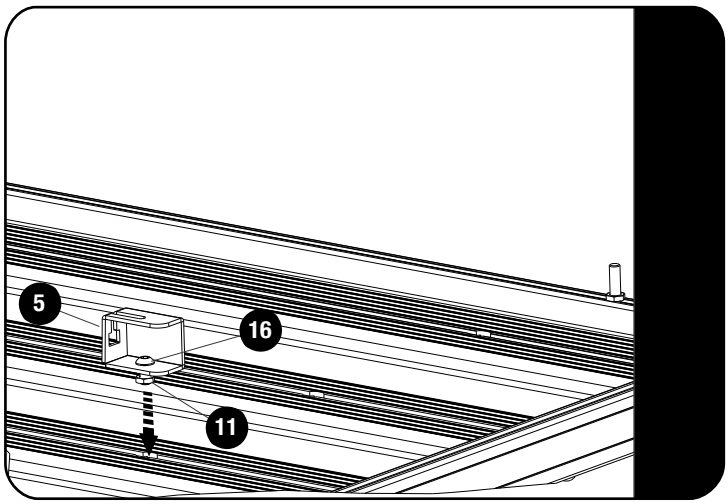

Assemble the M8 x 16 Button Head and M8 Thin Nut (Items 11 & 16) to the Rear Mount Bracket (Item 5).

Slide the assembly into the 3rd slat T-slot as shown.

3.3

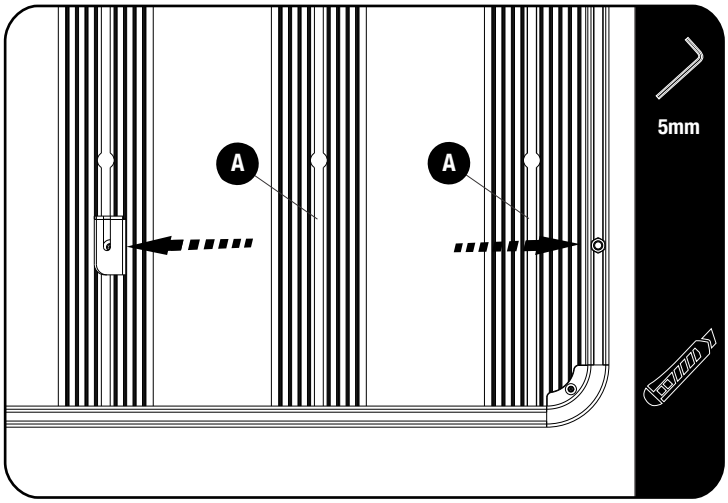

Determine where the tank will be located before tightening the bolt assembly from 3.1 and the Mounting Bracket assembly from 3.2.

Ensure that both are in line before fully tightening.

© 2022 FRONT RUNNER VEHICLE OUTFITTERS

2 FIT AND SECURE

SLII SIDE PROFILE FITMENT

3.4

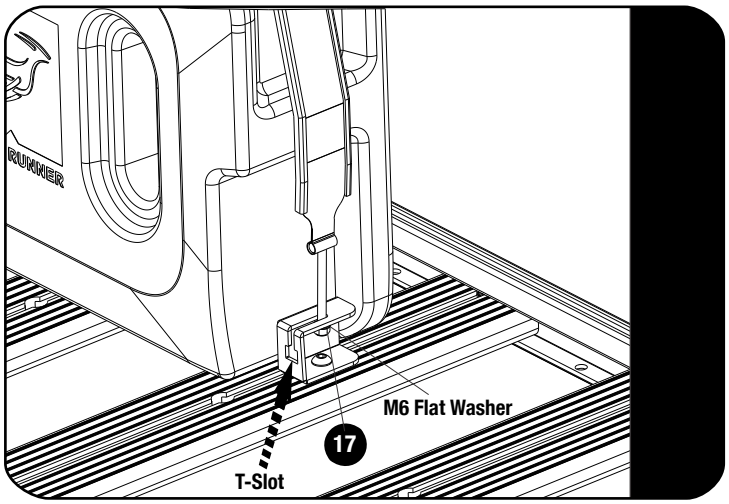

Insert the Strap Assembly into the T-slot of the Rear Mount Bracket as shown.

Ensure that the M6 Washer sits on the underside of the Mount Bracket.

You will adjust the Strap using the M6 Nyloc Nut (Item 17)

3.5

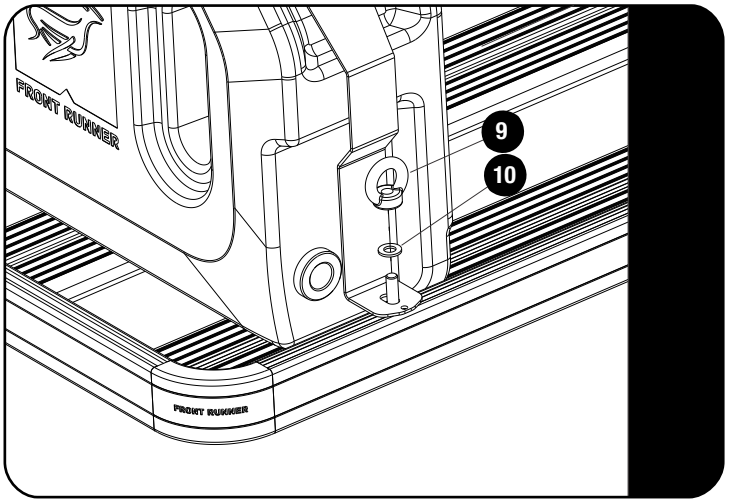

Secure the front of the Strap to the M8 x 30 Hex Bolt inserted in 3.1 using a M8 Eye Nut and M8 Nylon Washer (Items 9 & 10) as shown.

Fully tighten the Eye Nut before moving to the next step.

3.6

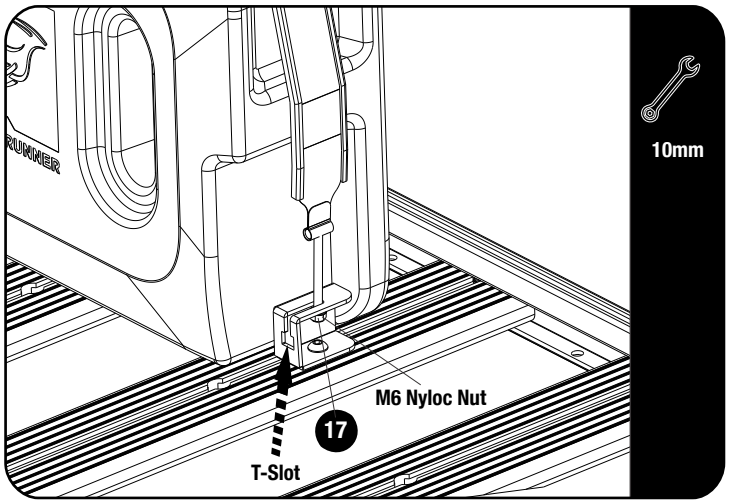

Adjust the tension on the Strap by tightening the M6 Nyloc Nut (Item 17).

After the tension is set correctly there should be no sliding movement from the tank on the slats.

If the tank is not in use, the Strap can be removed by sliding it out at the T-Slot of the Rear Mount Bracket.

© 2022 FRONT RUNNER VEHICLE OUTFITTERS

4 FIT AND SECURE

Slim Sport / Van Rack Fitment

4.1

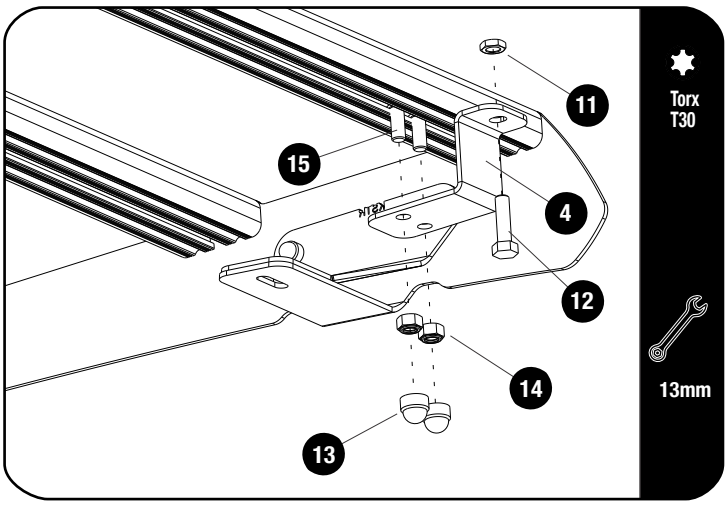

Choose where you would like to mount your Pro Water Tank Bracket.
Remove the Self Forming Screws from the chosen slat, lift the slat and slide two M8x20 Hex Bolts (item 15) in the bottom T-Slot.

For Van Rack Fitments there are no self forming screws to be removed.

Assemble the Z- Bracket (Item 4) using M8 Nyloc Nuts (Item 14) as shown.
Place M8 Nut Caps (Item 13) on the Nyloc Nuts.

Refit the Slat using the Self Forming Screws.

Assemble the M8 x 30 Hex Bolt and M8 Thin Nut (Items 11 & 12) the the Z - Bracket (Item 4) as shown

4.2

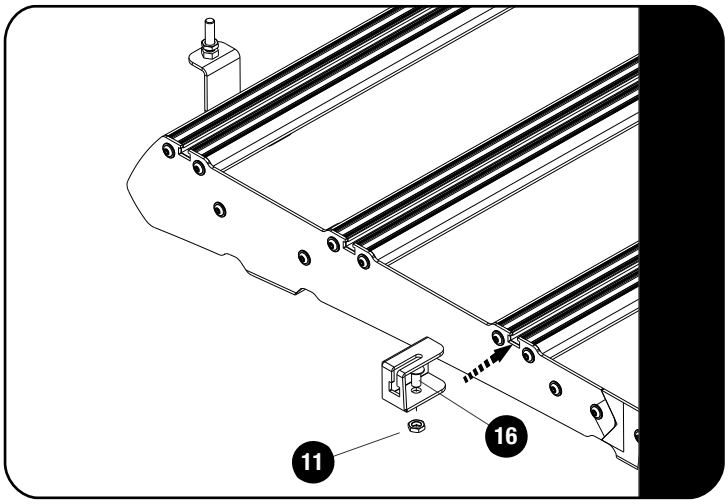

Assemble the M8 x 16 Button Head and M8 Thin Nut (Items 11 & 16) to the Rear Mount Bracket (Item 5).

Slide the assembly into the 3rd slat T-slot as shown.

4.3

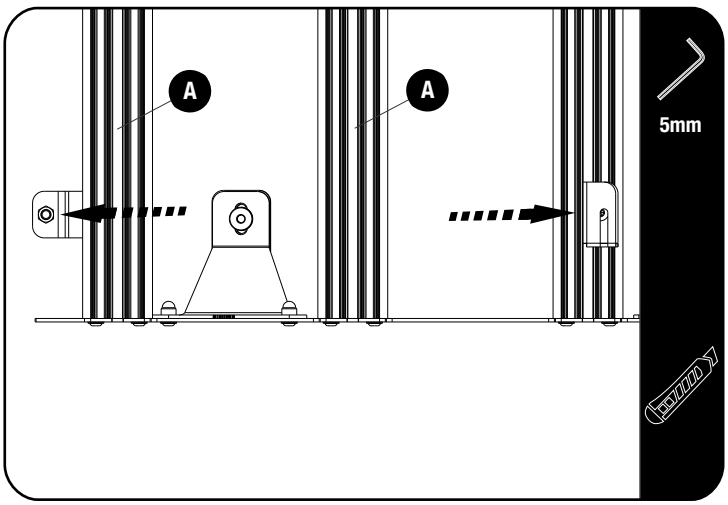

Determine where the tank will be located before tightening the bolt assembly from 4.1 and the Mounting Bracket assembly from 4.2.

Ensure that both are in line before fully tightening.

© 2022 FRONT RUNNER VEHICLE OUTFITTERS

3 FIT AND SECURE

Slim Sport / Van Rack Fitment

4.4

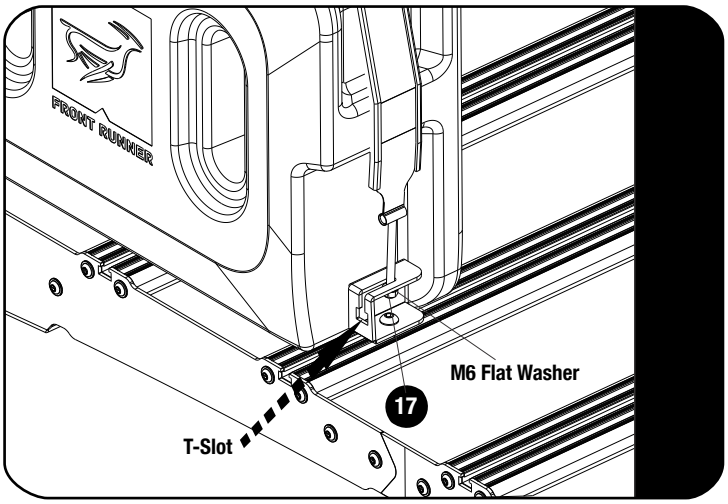

Insert the Strap Assembly into the T-slot of the Rear Mount Bracket as shown.

Ensure that the M6 Washer sit on the underside of the Mount Bracket.

You will adjust the Strap using the M6 Nyloc Nut (Item 17)

4.5

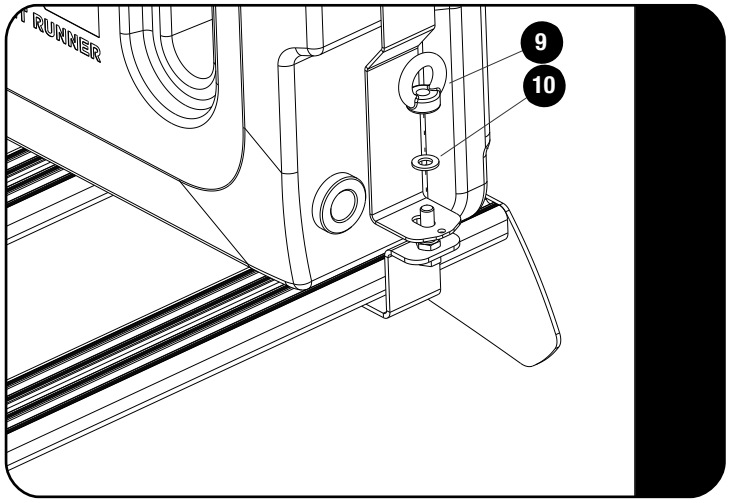

Sure the front of the Strap to the M8 x 30 Hex Bolt inserted in 4.1 using a M8 Eye Nut and M8 Nylon Washer (Items 9 & 10) as shown.

Fully tighten the Eye Nut before moving to the next step.

4.6

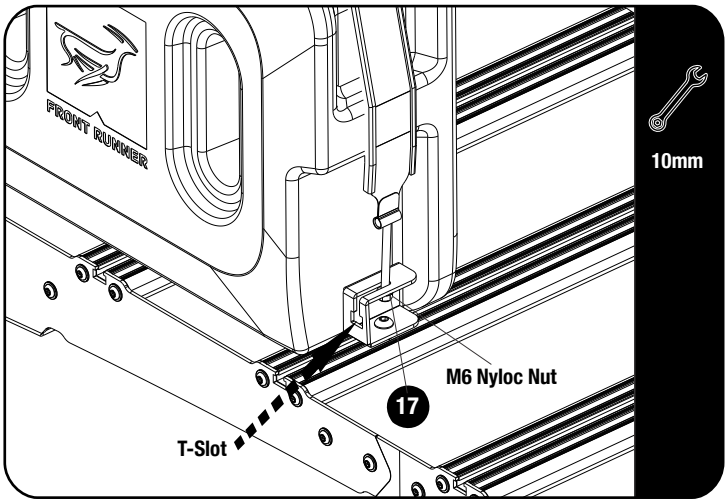

Adjust the tension on the Strap by tightening the M6 Nyloc Nut (Item 17).

After the tension is set correctly there should be no sliding movement from the tank on the slats.

If the tank is not in use, the Strap can be removed by sliding it out at the T-Slot of the Rear Mount Bracket.

© 2022 FRONT RUNNER VEHICLE OUTFITTERS

5 FIT AND SECURE

Tank Assembly

5.1

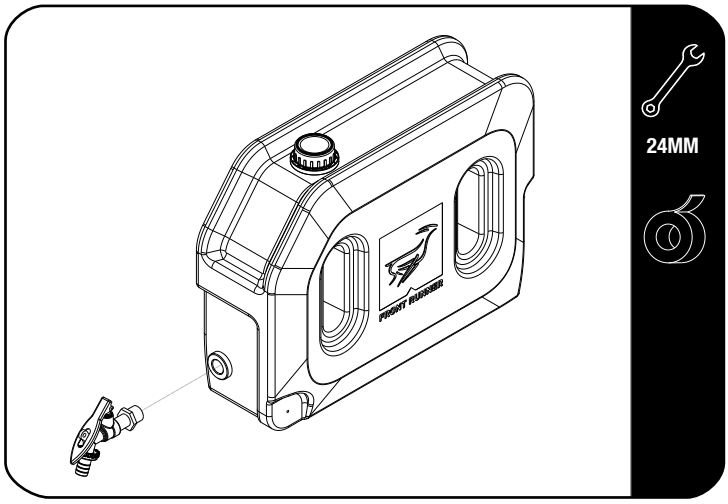

24MM

When fitting the tap, apply thread tape to the thread of the tap.

This will allow the Tap to be aligned to your chosen position and have a water tight seal.

When using the tank,If you lose water pressure unscrew the lid of the water tank.

6 FINISH

Congratulations! You did it. Take a step back and admire your work!

7 INSTALL OTHER VEHICLE AND RACK ACCESSORIES

Now's the time to visit your favorite Front Runner Dealer in person or online.

Be sure to tag us. We love to see our gear in action! #FrontRunnerOutfitters #BornToRoam

Share your adventures on:

© 2022 FRONT RUNNER VEHICLE OUTFITTERS