FRONT RUNNER

FORD RANGER T6 WINCH PLATE

ENG

WPFR001

INSTALL TIME: 30 mins

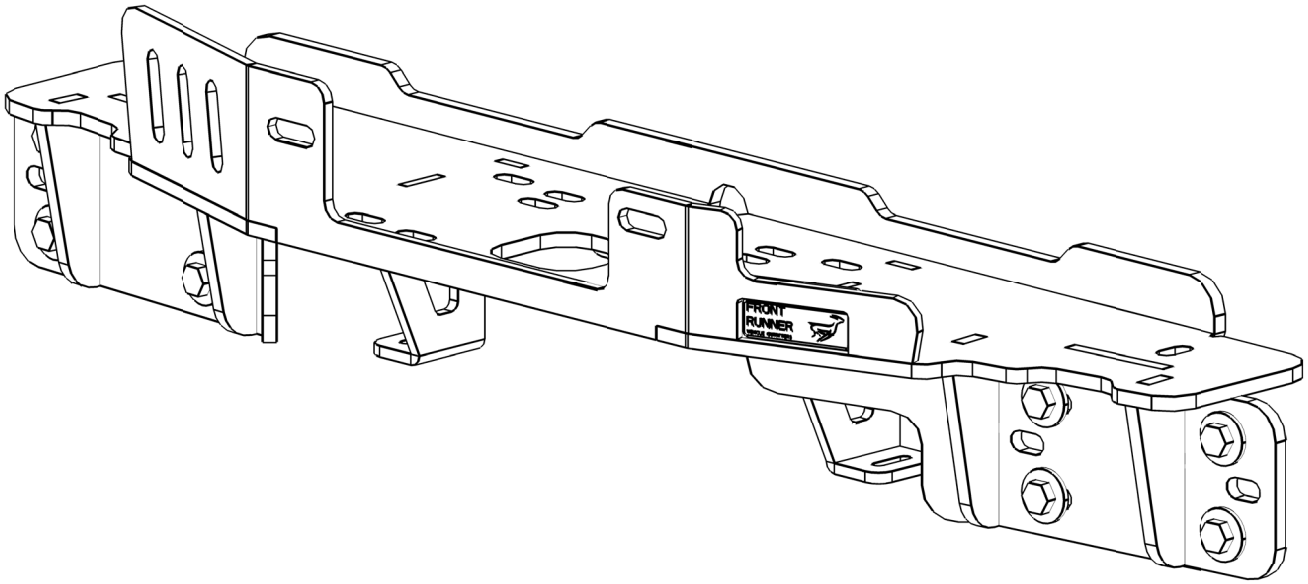

IMPORTANT WARNING!

IT IS CRITICAL THAT ALL FRONT RUNNER PRODUCTS BE PROPERLY AND SECURELY ASSEMBLED AND ATTACHED TO YOUR VEHICLE. IMPROPER ATTACHMENT COULD RESULT IN AN AUTOMOBILE ACCIDENT, AND COULD CAUSE SERIOUS BODILY INJURY OR DEATH TO YOU OR TO OTHERS. YOU ARE RESPONSIBLE FOR ASSEMBLING AND SECURING ALL FRONT RUNNER PRODUCTS TO YOUR VEHICLE, CHECKING THE ATTACHMENTS PRIOR TO USE, AND PERIODICALLY INSPECTING THE PRODUCTS FOR ADJUSTMENT, WEAR, AND DAMAGE. THEREFORE, YOU MUST READ AND UNDERSTAND ALL OF THE INSTRUCTIONS AND CAUTIONS SUPPLIED WITH YOUR FRONT RUNNER PRODUCT PRIOR TO INSTALLATION OR USE. IF YOU DO NOT UNDERSTAND ALL OF THE INSTRUCTIONS AND CAUTIONS, OR IF YOU HAVE NO MECHANICAL EXPERIENCE AND ARE NOT THOROUGHLY FAMILIAR WITH THE INSTALLATION PROCEDURES, YOU SHOULD HAVE THE PRODUCT INSTALLED BY A PROFESSIONAL INSTALLER OR OTHER QUALIFIED PERSONNEL.

© COPYRIGHT 2015 FRONT RUNNER VEHICLE OUTFITTERS

1 GET ORGANIZED...

Here is what you are looking at:

Item #	Quantity	Description
1	1	WINCH PLATE WPFR001
2	16	M10 FLAT_WASHER
3	8	M10 X 30mm HEX BOLT
4	8	M10 NYLOC NUT

You will need:

- ☐ A Friend
- ☐ A Winch and necessary tools associated with your Winch
- ☐ 17 mm Flat & Socket Wrench
- ☐ 15 mm Flat & Socket Wrench
- ☐ 10 mm Flat & Socket Wrench
- ☐ 8 mm Flat & Socket Wrench
- ☐ Medium Star Screw Driver
- ☐ Medium 4-5mm Flat Screw Driver
- ☐ Craft Knife

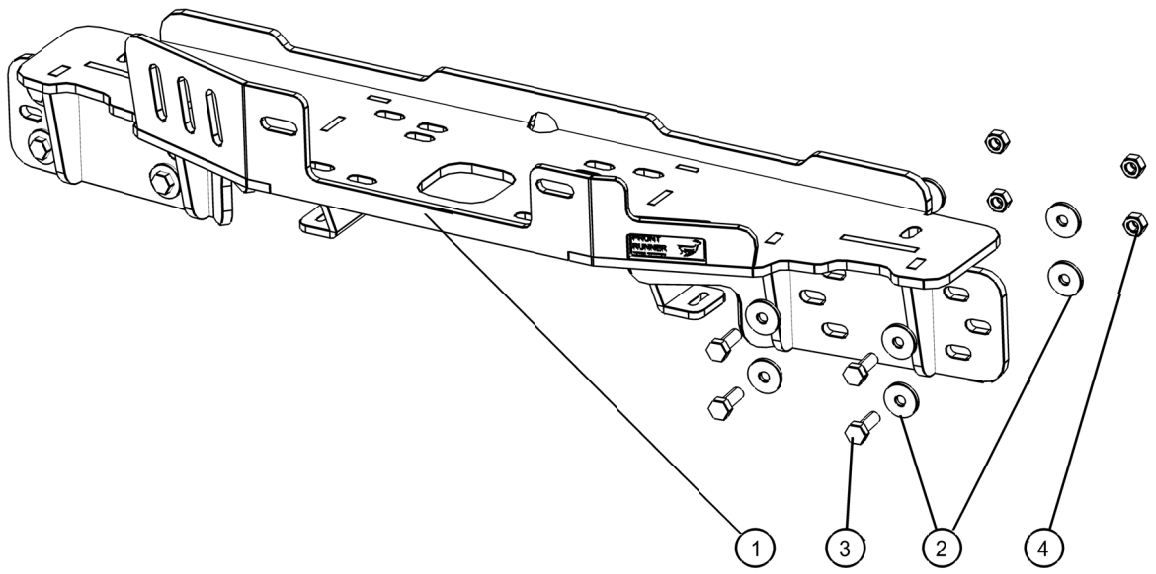

(A) **Familiarize yourself with the parts and then step away from the work area and read through these instructions from beginning to end. At the same time familiarize yourself with your Winch installation guide. Take a moment as a little prep now may save you a lot of time later.**

© COPYRIGHT 2015 FRONT RUNNER VEHICLE OUTFITTERS

2 BUMPER DISASSEMBLY

(A) Let's get started by removing the Grill. With the engine bay open you will see at the back edge of the radiator cover plate there are three Press-in Studs that you will need to remove. These are indicated by the arrows below.

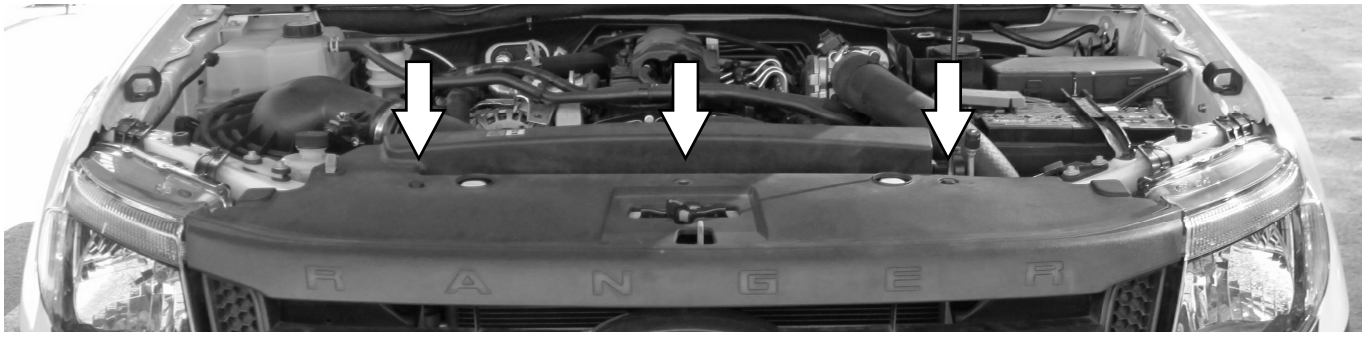

To remove the Press-in Studs use a medium 4 to 5mm wide flat screwdriver. Carefully place the screw driver under the head of the Stud and leaver up. It will not pull out all the way so be careful not to force it. With the head partially up remove the Stud. Repeat this with the remaining two Studs.

Keep all Studs, Bolts and Nuts in a safe place for when you need to put it all back together again.

(B) Lift up the cover to see where the clips are located. From under the vehicle unclip the clips closet to the lights. You will be able to unclip the other clips from the top now.

Do the same for the bottom clips that go into the bumper. With the grill removed, move on to removing the bumper itself.

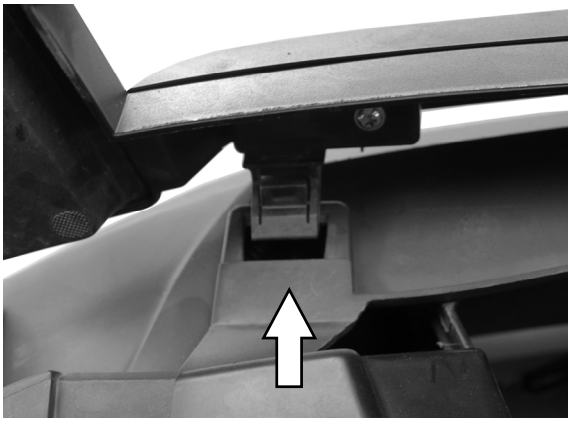

© COPYRIGHT 2015 FRONT RUNNER VEHICLE OUTFITTERS

2 BUMPER DISASSEMBLY CONT...

(C) **Undo the 10mm Bolts either side of the radiator and then remove the Push-in Stud the same way as in Step 2A**

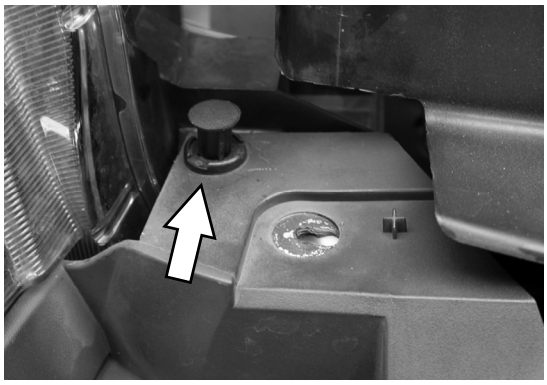

(D) **On the edge of the wheel arch there are Screw-in studs. Use a Star/Philips screwdriver to unscrew. Once unscrewed pull out the Stud.**

(E) **Unscrew the bottom lip of the Bumper from the supports using 10mm Socket Wrench.**

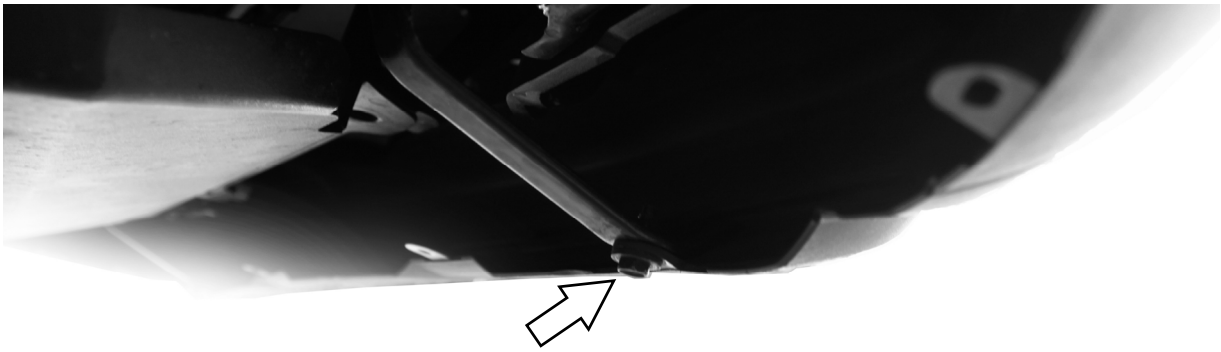

© COPYRIGHT 2015 FRONT RUNNER VEHICLE OUTFITTERS

2 BUMPER DISASSEMBLY CONT...

(F) From the right side of the vehicle, grab the Bumper on the edge as indicated by the arrow (A). Pull the Bumper to the left to and pop the wheel arch edge of the Bumper and from the vehicle. This will release the Bumper from the light indicated by arrow (B). Repeat this step for the left hand side of the Bumper. Have your friend support the Bumper when un-clipping the left hand side.

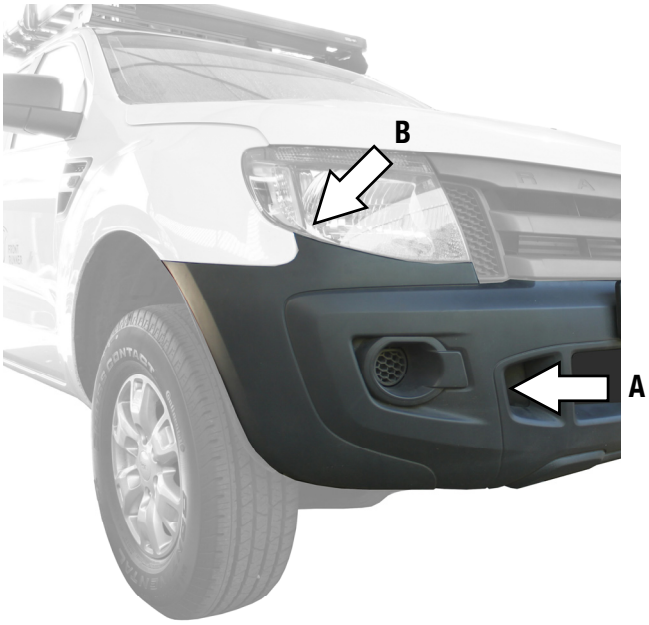

(G) Remove the Radiator Cowlings with an 8mm Socket Wrench, repeat this for both the Right and Left hand side of the vehicle.

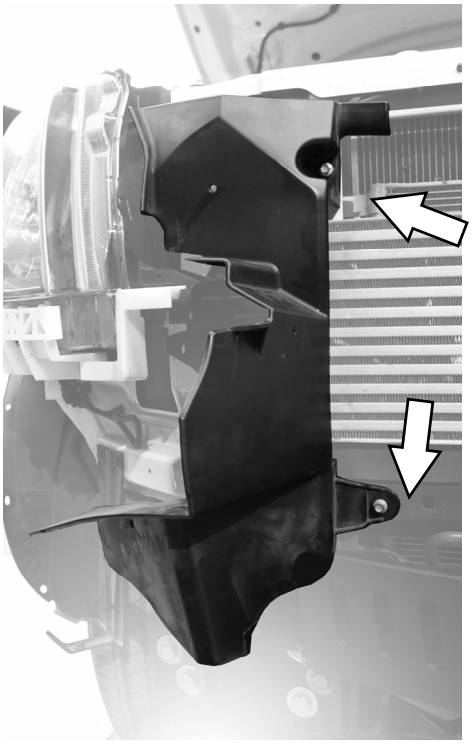

(H) Remove the Front Chassis Member using a 15mm Socket wrench. Keep the Bolts for reuse in the next step.

Bumper disassembly, Done!

© COPYRIGHT 2015 FRONT RUNNER VEHICLE OUTFITTERS

3 WINCH PLATE INSTALLATION

(A) Install the Winch Plate in the position where the Front Chassis Member was before removal. Use the Nyloc Nuts, Hex Bolts and Washers (Items 4, 3 & 2) together with the four original bolts removed in the Step 2H. Insert two of the original bolts in the middle Bolt Holes as shown by the arrows. Before tightening the nuts and Bolts fully, centre the Winch Plate. Here you will use your 15 & 17mm Socket Wrenches to tighten the Bolts Fully.

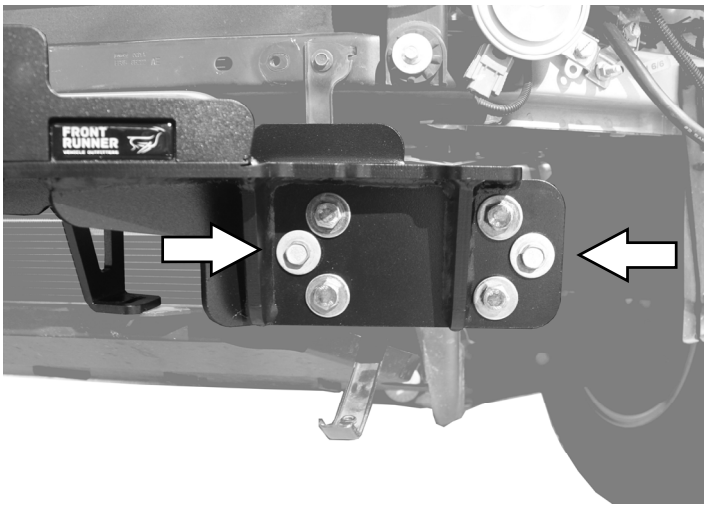

(B) With the Winch Plate in place reinstall the two Radiator Cowling's, using the four original 8mm bolts. See Step 2G for how it was removed.

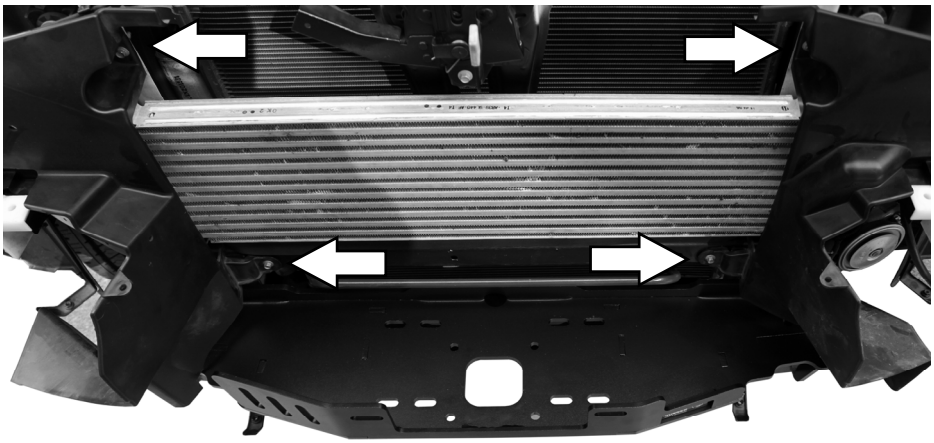

(C) Temporally install your Winch to check whether there is enough clearance between the Winch and the hydraulic pipe. If you find that the pipe is in the way, bend it slightly back toward the radiator. Check the assembly again to see that there is sufficient clearance. If happy move on.

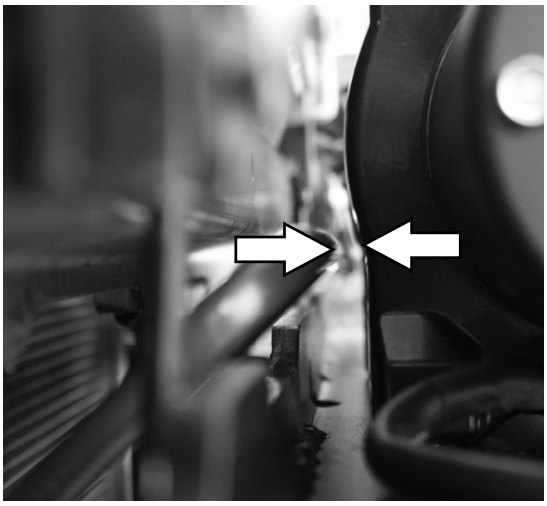

© COPYRIGHT 2015 FRONT RUNNER VEHICLE OUTFITTERS

3 WINCH PLATE INSTALLATION CONT...

(D) If you have a Front Runner Sump Guard or OEM Sump cover you can bolt it to the Winch Plate now as shown.

(E) Install your Winch with its supplied fasteners. Centre the winch on the Winch Plate.

This would also be the time to do the electrical installation of the Winch and Remote Control Unit connection as per the fitment guide supplied with your Winch.

(F) Fit the Rollers using the Nuts and Bolts supplied with your winch. If you have a Winch that is fitted with a Plasma Rope fit the supplied guide instead. You will need to unwind the Cable or Rope to feed it through the Rollers or Guide.

Winch and Winch Plate installation Done!

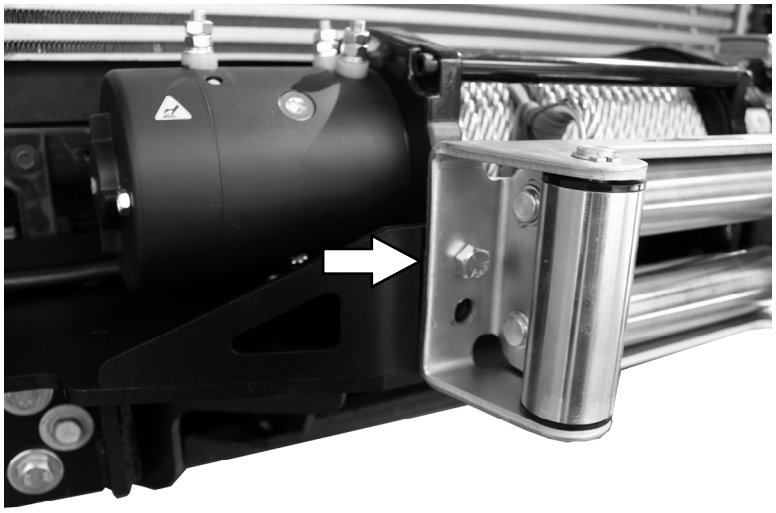

© COPYRIGHT 2015 FRONT RUNNER VEHICLE OUTFITTERS

3 BUMPER REASSEMBLY

(A) Remove the Number Plate and Holder. Cut away the Bumper Grill Ribs from the opening of the Bumper as shown.

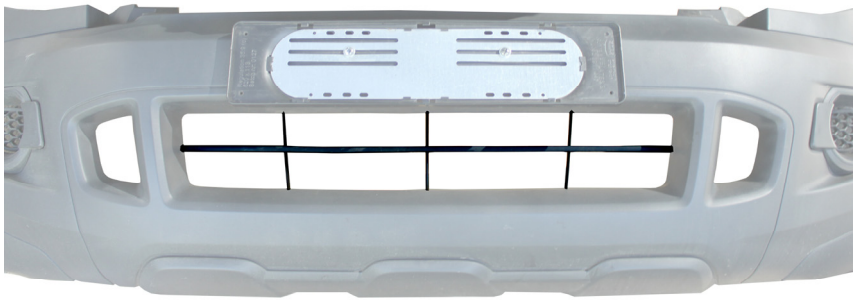

Using your Craft Knife cut the Ribs away. Cut as close as possible to the face of the Bumper to achieve a clean installation.

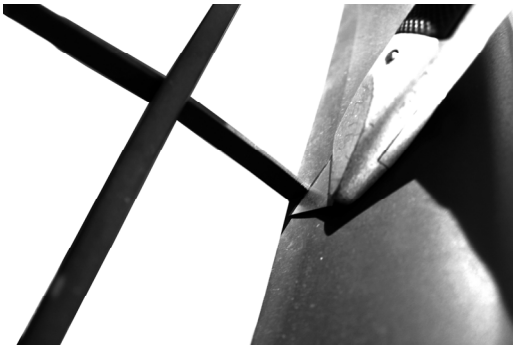

(B) Once you have cut away the Ribs, refit the bumper by guiding the bumper around the Winch Plate following Steps 2F - 2A to refit the Bumper and Grill.

Refit your number plate at the same time in the desired position.

(C) Congratulations, you have completed you installation. Take a step back and admire your handy work. Good Job!

© COPYRIGHT 2015 FRONT RUNNER VEHICLE OUTFITTERS