INSTALL TIME: 15 mins

1 GET ORGANIZED

you will need:

- ☐ a Front Runner roof rack
- ☐ a 13 mm flat wrench or socket wrench
- ☐ a tape measure
- ☐ a clean dry area to work

Here is what you are looking at:

ITEM #	QUANTITY	DESCRIPTION
1	1	FRONT RUNNER ROOF RACK
2	2	WIND DEFLECTOR - 1 LEFT, 1 RIGHT
3	6	M8 x 16 HEX BOLT
4	6	M8 FLAT WASHER
5	6	M8 NYLOC NUT

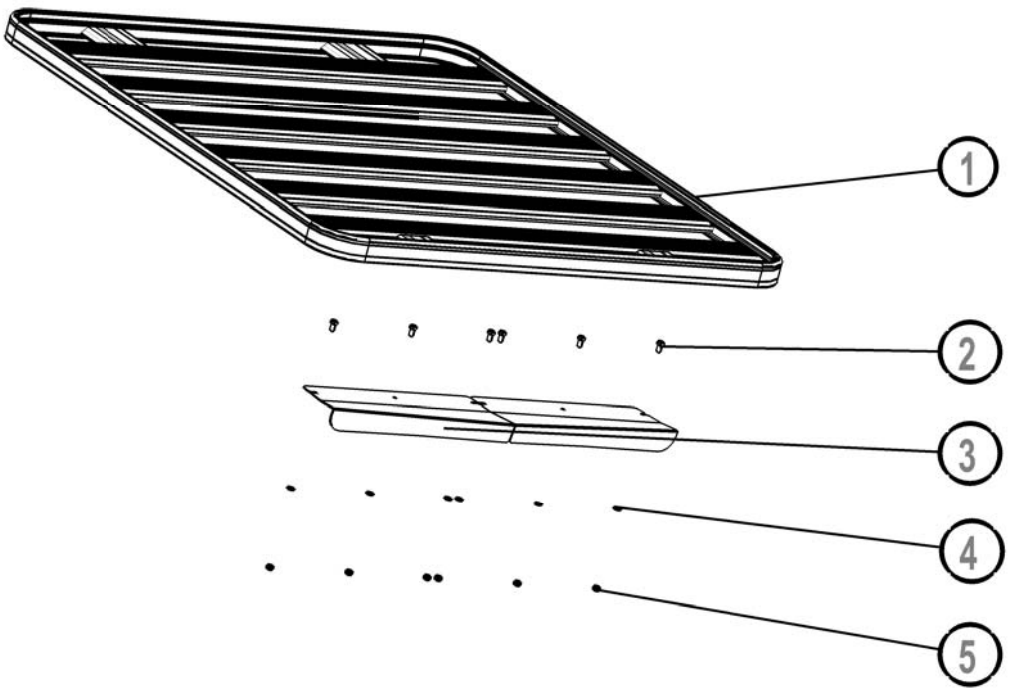

2 INSTALL WIND DEFLECTOR

Check the product sticker on the roof rack, if it is upside down, you are ready to install the wind deflector, if it is not, turn the rack over so that it is upside down.

A)

Slide six bolts (Item 2) into the channel of the first slat of the roof rack, using the machined slots in the slats.

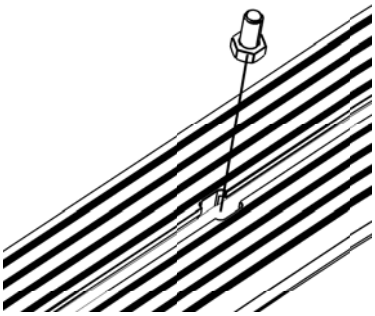

B)

Align the six bolts with the holes in the wind deflectors. Three holes in each the left and right wind deflectors.

Place the wind deflectors over the bolts with the bend/lip facing up.

The large rounded corners of the wind deflector must go to the outside, and the smaller rounded edges/narrow part must meet in the middle.

Place the M8 washers (Item 4) and nyloc nuts (Item 5) over the bolts and hand tighten.

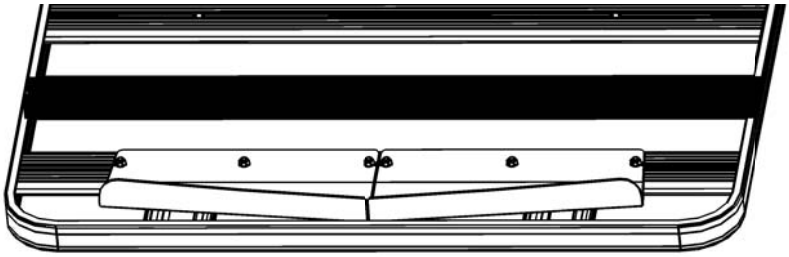

C)

Using a tape measure, centre the wind deflectors using the outer edges of the rack and wind deflectors as reference.

Once you are happy with the position of the deflector use your 13 mm wrench and fasten the deflector.

IMPORTANT! Once your Roof Rack is fitted, ensure a 15 mm clearance is maintained between the Wind Deflector and the vehicles roof otherwise damage to the roof may occur. Bend the Wind Deflector by hand if necessary.

© 2011 Front Runner Outfitters, Inc.