FRONT RUNNER

FORD RANGER (2019-CURRENT) DITCH MOUNT A-PILLAR LIGHT BRACKETS

ENG

VACC040

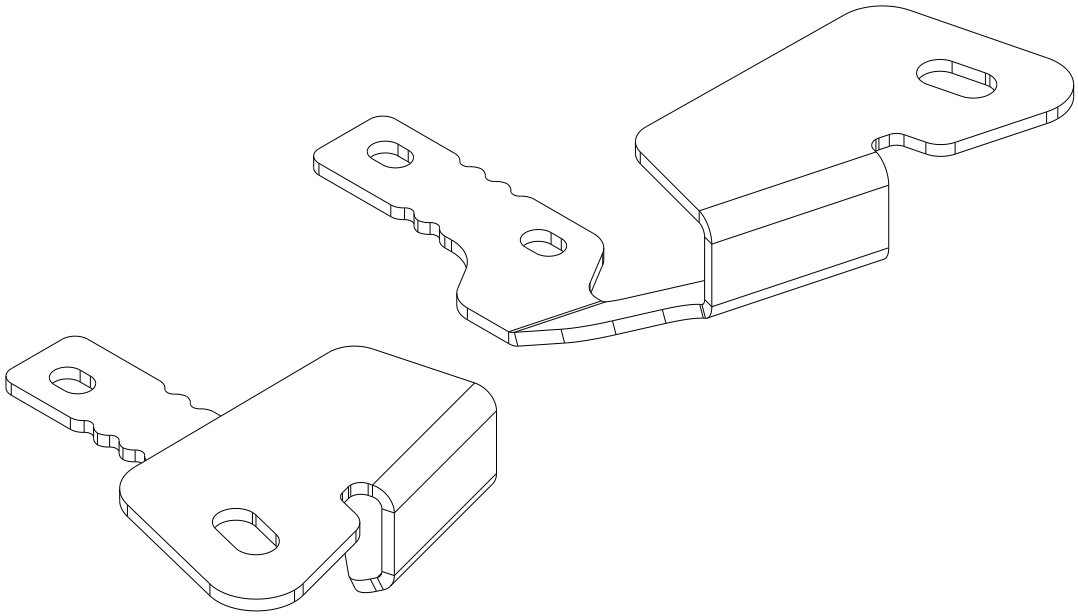

READ ME !

Thank you for purchasing a Front Runner Ford Ranger (2019-Current) Ditch Mount A-Pillar Light Brackets.

Before you start, take a moment to familiarize yourself with the Fitting Instructions and the included components.

Refer to Page 2 for a list of all the components, quantities and tools required.

IMPORTANT WARNING!

IT IS CRITICAL THAT ALL FRONT RUNNER PRODUCTS BE PROPERLY AND SECURELY ASSEMBLED AND ATTACHED TO YOUR VEHICLE. IMPROPER ATTACHMENT COULD RESULT IN AN AUTOMOBILE ACCIDENT, AND COULD CAUSE SERIOUS BODILY INJURY OR DEATH. YOU ARE RESPONSIBLE FOR ASSEMBLING AND SECURING ALL FRONT RUNNER PRODUCTS TO YOUR VEHICLE, CHECKING THE ATTACHMENTS PRIOR TO USE, AND PERIODICALLY INSPECTING THE PRODUCTS FOR ADJUSTMENT, WEAR AND DAMAGE. THEREFORE, YOU MUST READ AND UNDERSTAND ALL OF THE INSTRUCTIONS AND PRECAUTIONS SUPPLIED WITH YOUR FRONT RUNNER PRODUCT PRIOR TO INSTALLATION OR USE. IF YOU DO NOT UNDERSTAND ALL OF THE INSTRUCTIONS AND CAUTIONS, OR IF YOU HAVE NO MECHANICAL EXPERIENCE AND ARE NOT THOROUGHLY FAMILIAR WITH THE INSTALLATION PROCEDURES, YOU SHOULD HAVE THE PRODUCT INSTALLED BY A PROFESSIONAL INSTALLER OR OTHER QUALIFIED PERSONNEL.

NOTE: Front Runner will not be responsible for any damage caused by the failure to install the product according to these instructions.

Please call us if you have any questions about the installation of this product.

 © 2023 FRONT RUNNER VEHICLE OUTFITTERS

1 GET ORGANIZED

IN THE BOX		
1	2 X	Ditch Mount Light Brackets (1Left / 1Right)

TOOLS NEEDED

14 mm

FIGURE 1.1

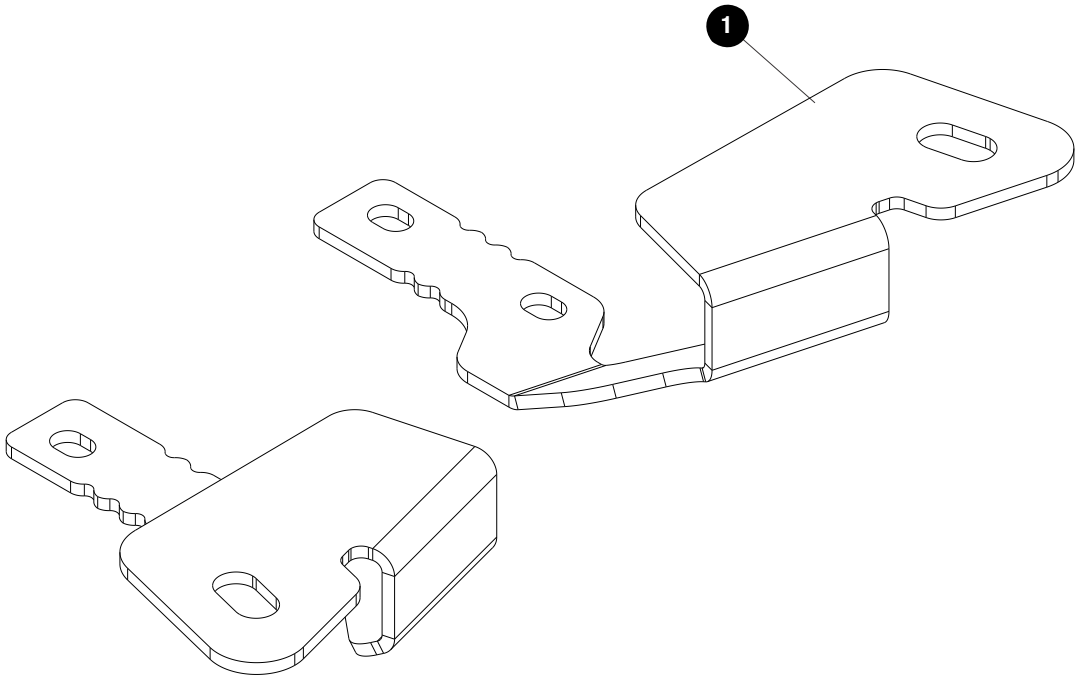

 © 2023 FRONT RUNNER VEHICLE OUTFITTERS

2 FIT AND SECURE

2.1

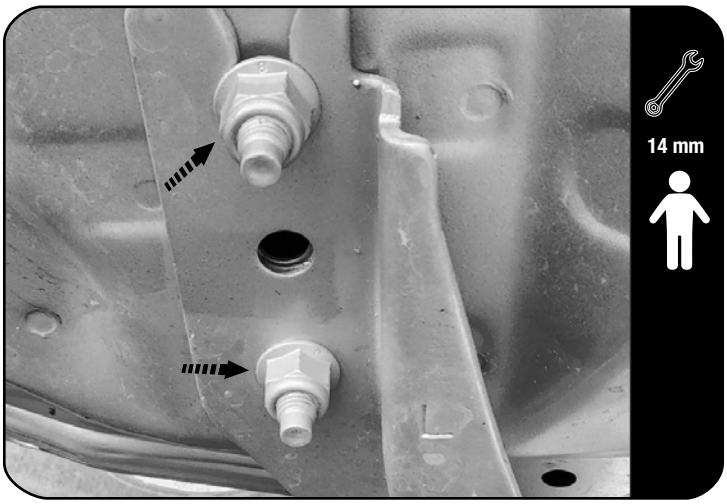

Start by opening and placing a suitable support under the front of the hood to help support it while you remove the bolts.

Have a Friend hold the hood in position to stabilize while you remove the factory bolts using a 14mm wrench or socket.

Do not remove both sides, do one side at a time.

2.2

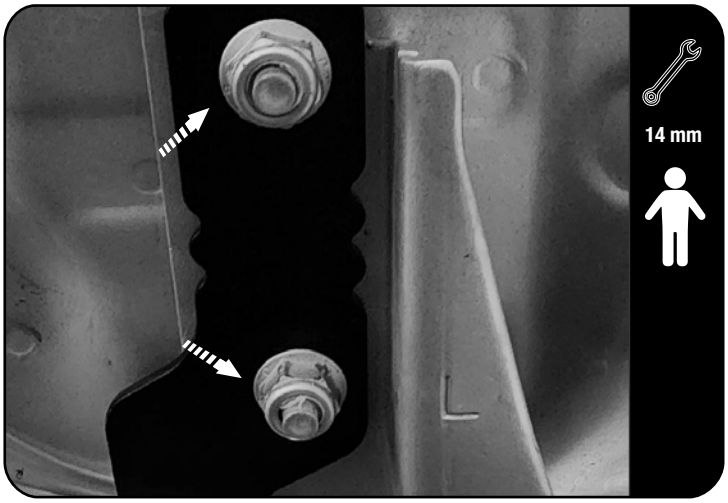

Position and align the bracket over the factory holes.

Refit the factory bolts using the witness marks as a guide to align the hood. Fully tighten.

Do the same with the opposite side.

Tightening Torque:

M8 : 15-20Nm / 11.06 ft lb - 14.75 ft lb

3 FINISH

Congratulations! You did it. Take a step back and admire your work!

4 INSTALL OTHER VEHICLE AND RACK ACCESSORIES

Now's the time to visit your favorite Front Runner Dealer in person or online.

Be sure to tag us. We love to see our gear in action! #FrontRunnerOutfitters #BornToRoam

Share your adventures on:

© 2023 FRONT RUNNER VEHICLE OUTFITTERS