FRONT RUNNER

JEEP JK (5 DOOR) SLII INTERIOR RACK

ENG

VACC021

INSTALL TIME: 1 Hour

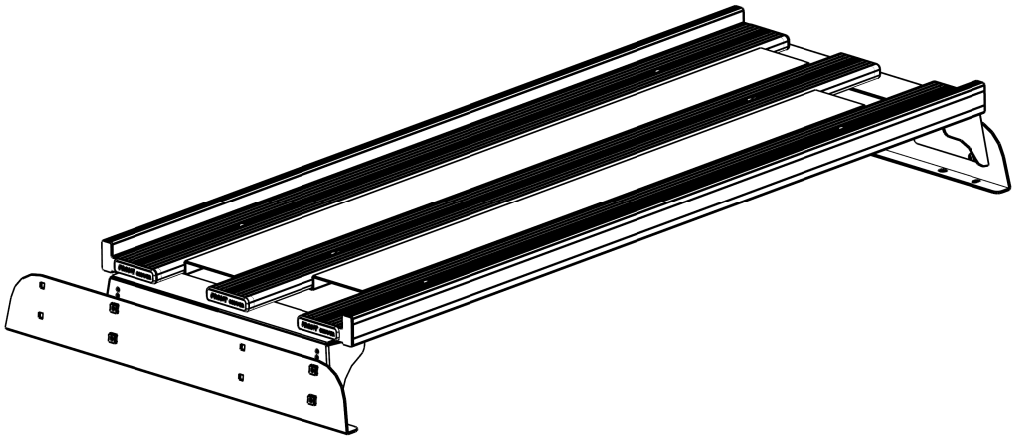

Note: Some of the images contained in these instructions show the vehicle without its roof on. This is done for illustration purposes . Do not remove your roof for this fitment.

IMPORTANT WARNING!

IT IS CRITICAL THAT ALL FRONT RUNNER PRODUCTS BE PROPERLY AND SECURELY ASSEMBLED AND ATTACHED TO YOUR VEHICLE. IMPROPER ATTACHMENT COULD RESULT IN AN AUTOMOBILE ACCIDENT, AND COULD CAUSE SERIOUS BODILY INJURY OR DEATH TO YOU OR TO OTHERS. YOU ARE RESPONSIBLE FOR ASSEMBLING AND SECURING ALL FRONT RUNNER PRODUCTS TO YOUR VEHICLE, CHECKING THE ATTACHMENTS PRIOR TO USE, AND PERIODICALLY INSPECTING THE PRODUCTS FOR ADJUSTMENT, WEAR, AND DAMAGE. THEREFORE, YOU MUST READ AND UNDERSTAND ALL OF THE INSTRUCTIONS AND CAUTIONS SUPPLIED WITH YOUR FRONT RUNNER PRODUCT PRIOR TO INSTALLATION OR USE. IF YOU DO NOT UNDERSTAND ALL OF THE INSTRUCTIONS AND CAUTIONS, OR IF YOU HAVE NO MECHANICAL EXPERIENCE AND ARE NOT THOROUGHLY FAMILIAR WITH THE INSTALLATION PROCEDURES, YOU SHOULD HAVE THE PRODUCT INSTALLED BY A PROFESSIONAL INSTALLER OR OTHER QUALIFIED PERSONNEL.

© COPYRIGHT 2014 FRONT RUNNER VEHICLE OUTFITTERS

1 GET ORGANIZED...

Here is what you are looking at:

Item #	Quantity	Description
1	2	COMBINED SLAT
2	1	STANDARD SLAT
3	6	M8 x 16 HEX BOLT
4	2	TOP BRACKET
5	2	BASE BRACKET
6	8	M6 CAGE NUT
7	6	M8 NYLOC NUT
8	6	M8 FLAT WASHER
9	8	M6 FLAT WASHER
10	8	M6 SPRING WASHER
11	8	M6 x 16 BUTTON HEAD BOLT
12	1	REAR TOP HAT
13	1	FRONT TOP HAT
14	14	M8 HALF NUT
15	14	M8 SCHNORR WASHER
16	14	M8 x 12 BUTTON HEAD BOLT

You will need:

- a Jeep JK 5 Door
- a T40 Torx Wrench
- a 13mm Wrench
- a 4mm Hex Key
- a 5mm Hex Key
- a tape measure
- a clean dry work area near your Jeep

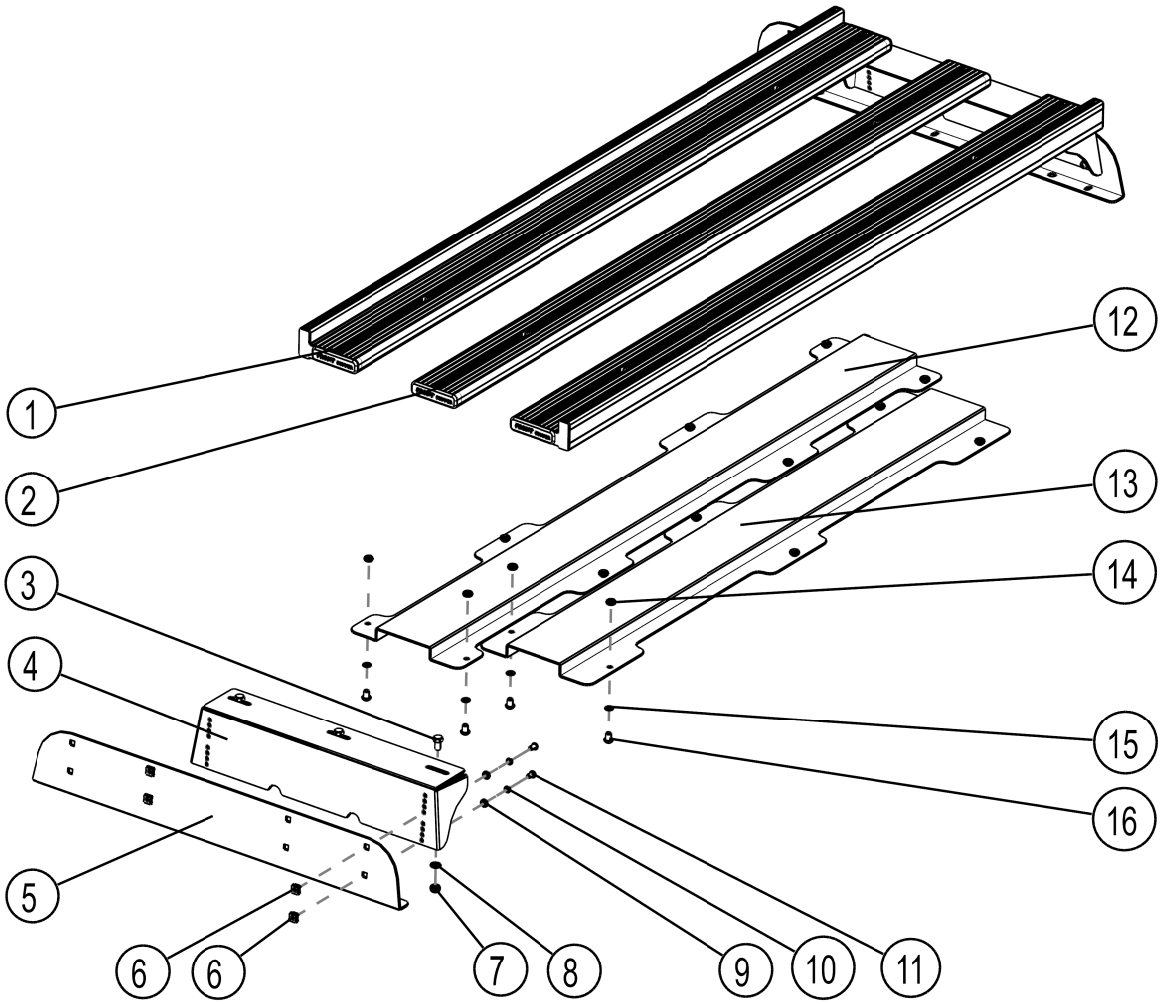

(A) **Familiarize yourself with the parts and then step away from the work area and read through these instructions from beginning to end. Grab a cup of coffee and take a moment. A little prep now may save you a lot of time later.**

© COPYRIGHT 2014 FRONT RUNNER VEHICLE OUTFITTERS

2 PREP YOUR JEEP AND MOUNT THE BRACKETS

(A) **Use your T40 Torx wrench to remove the six Torx screws which fasten your fiberglass roof to the vehicle. There will be three to loosen on each side. Put the screws aside to be used later.**

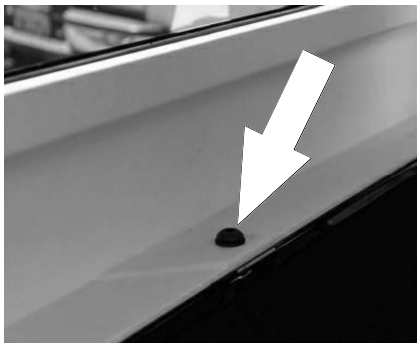

(B) **Referring to the image, attach four M6 Cage Nuts (Item 6) onto the outside of each Base Bracket (Item 5). The two Brackets are identical, but will become either a left or a right hand side bracket after the Cage Nuts are attached.**

The right hand side will use the four holes as indicated by the arrows, and the left hand side will use the four hole as indicated by the numbers. Shown is a completed image of the right hand side bracket.

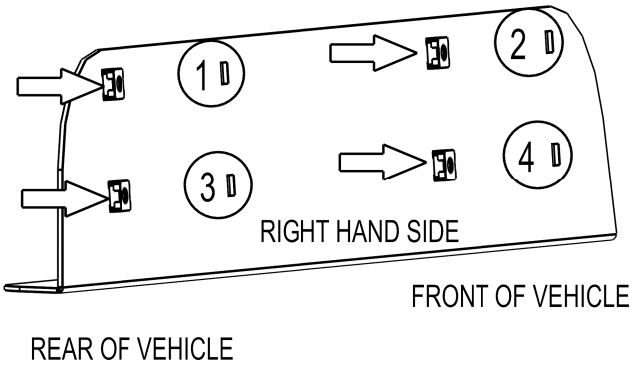

(C) **Assemble the two Top Brackets to the Base Brackets as shown in the exploded view on Pg2.**

The shelf can be set to four different height levels (select a height best suited to your installation and usage requirements), depending on the hole combination chosen on the Top Brackets (as indicated by the arrows). Make sure that the same set of holes are used for both Bracket otherwise your shelf will not sit level.

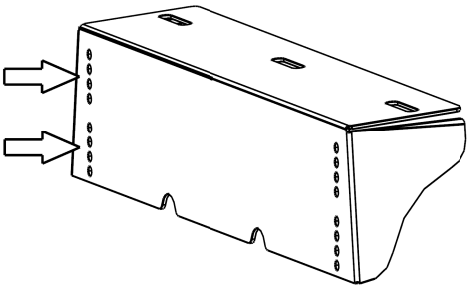

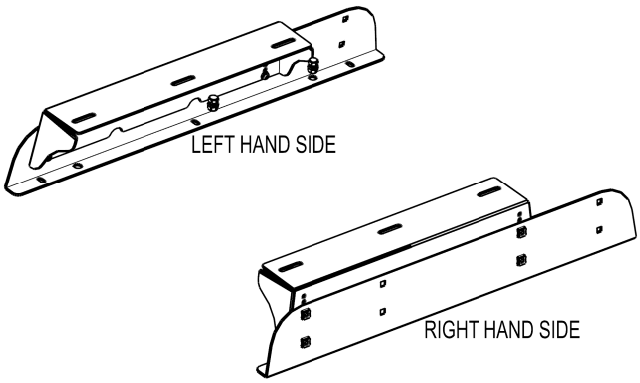

© COPYRIGHT 2014 FRONT RUNNER VEHICLE OUTFITTERS

2 PREP YOUR JEEP AND MOUNT THE BRACKETS...CONT.

(D) Place the Bracket Assemblies from Step 2C on top of the bottom lip of the roof, lining up the holes in the Brackets with the bolt holes from Step 2A. Hand tighten the Brackets and roof to the vehicle using the original bolts.

Ensure that the Bracket Assemblies are as far inward as they can go. You will see that the Base Brackets are slotted. (This will ensure the Base Brackets don't rattle against the vehicle's body).

Tighten all six bolts using your Torx wrench. .

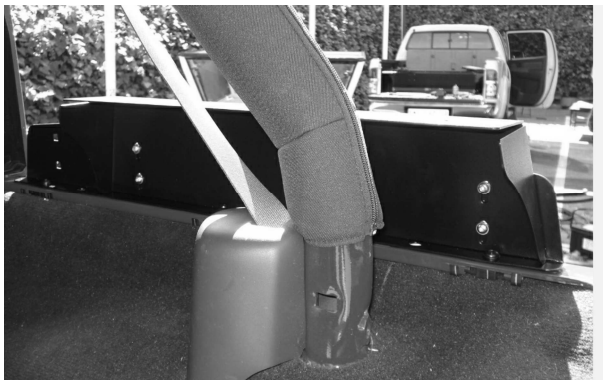

3 INSTALL THE SLATS

(A) Insert a M8 x 16 Hex Bolt (Item 3) into each end of the three Slats (Items 1 & 2) using the machined cutout in the Slat as illustrated.

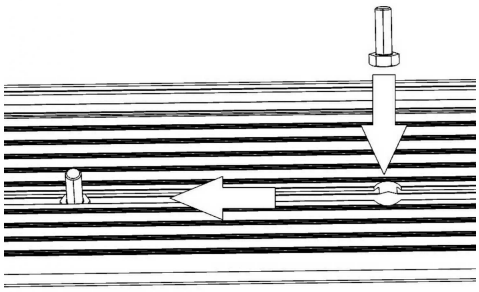

(B) Position the Slats onto the Top Brackets, lining up the bolts (from Step 3A) with the holes in the Brackets. The two Combined Slats (Item 1) go to the front and rear (with the raised "T-slot" channel facing the outside) and the Standard Slat (Item 2) goes in the center. Refer to exploded view on Pg2.

Hand tighten the Slats to the Top Brackets using six of the M8 Nyloc Nuts and M8 Flat Washers supplied (Items 7 & 8). Centralize the Slats from left to right (check using a tape measure) and tighten the M8 Nyloc nuts.

© COPYRIGHT 2014 FRONT RUNNER VEHICLE OUTFITTERS

4 FASTENING THE TOP HAT BRACKETS

(A) **Using the machined slots again, Insert a M8 Half Nut (Item 14) into the underneath of each Slat and position as shown.**

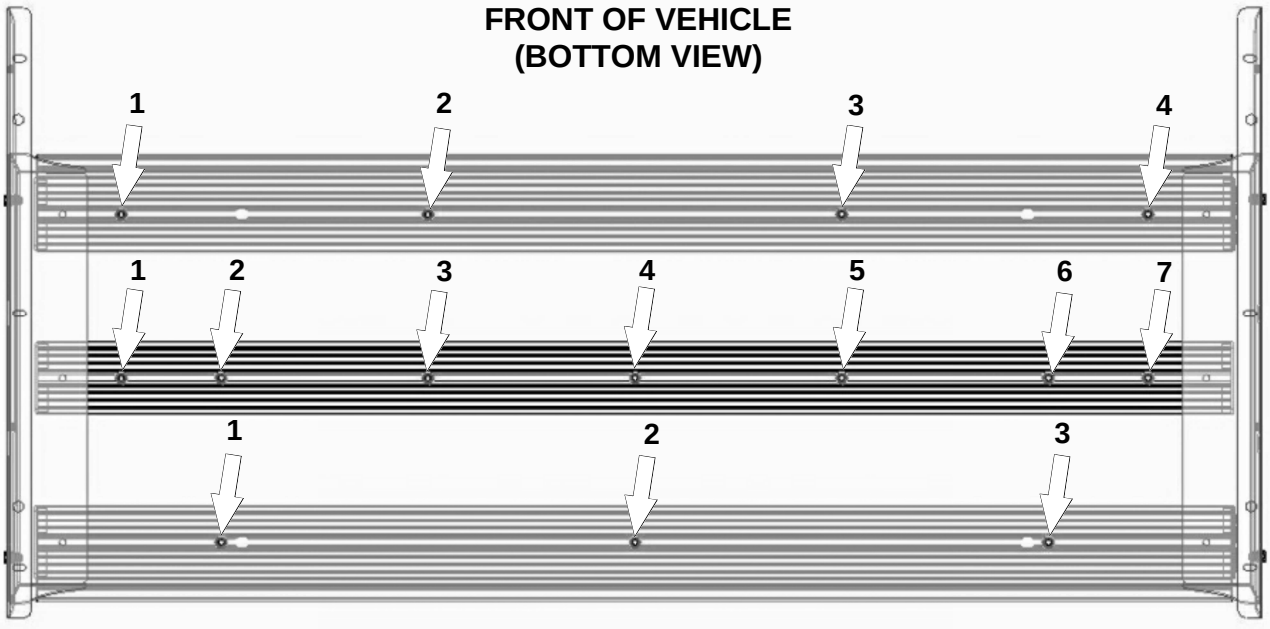

(B) **Working underneath the Slats, position the Rear Top Hat (Item 13 - the longer one) between the back two slats. Lift the Top Hat into position lining up the holes in the Top Hat with the Half Nuts inserted in Step 4A. Hand tighten the Top Hat to the Slats using the M8 x12 Button Head Bolts and M8 Schnorr Washers (item 15 & 16) Supplied.**

Repeat the process for the Front Top Hat (Item 12). Centre the two Top Hats from left to right (check using a tape measure) and tighten all fourteen Button Head Bolts.

Finally insert the "T-Slot" rubber supplied into the top "T-slots" of the three slats.

© COPYRIGHT 2014 FRONT RUNNER VEHICLE OUTFITTERS

5 TAKE A TRIP

(A) After your first adventure, check that all nuts, bolts, screws and fittings are tight. Re-tighten where needed. You'll find a small amount of settling has happened.

Go on many more adventures, periodically checking all nuts, bolts, screws and fittings.

6 INSTALL OTHER VEHICLE AND RACK ACCESSORIES

(A) Now's the time to visit your favorite Front Runner dealer in person or online.

© COPYRIGHT 2014 FRONT RUNNER VEHICLE OUTFITTERS