FRONT RUNNER

DROP DOWN TABLE

ENG

TBRA030

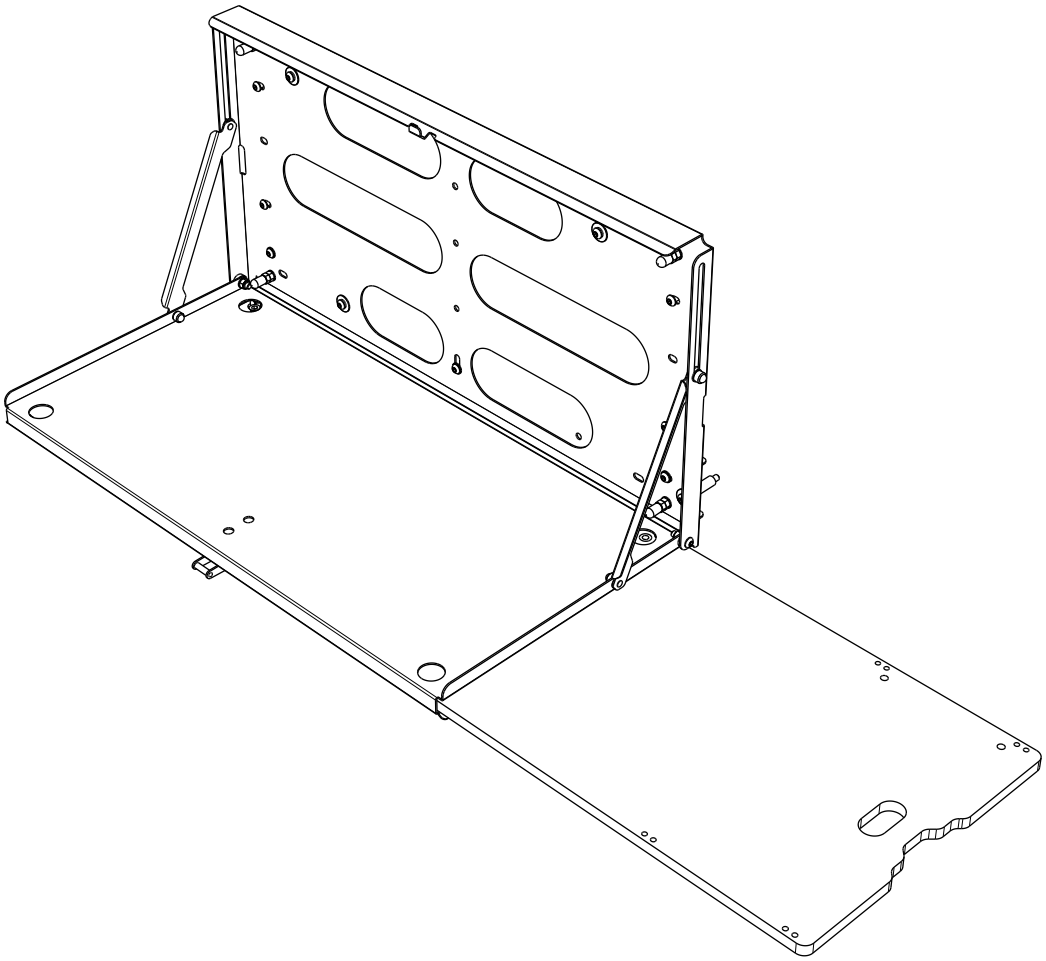

READ ME !

Thank you for purchasing a Front Runner Drop Down Table.

Before you start, take a moment to familiarize yourself with the Fitting Instructions and the components received.

Refer to Page 2 for a list of all the components, quantities and tools required.

IMPORTANT WARNING!

IT IS CRITICAL THAT ALL FRONT RUNNER PRODUCTS BE PROPERLY AND SECURELY ASSEMBLED AND ATTACHED TO YOUR VEHICLE. IMPROPER ATTACHMENT COULD RESULT IN AN AUTOMOBILE ACCIDENT, AND COULD CAUSE SERIOUS BODILY INJURY OR DEATH. YOU ARE RESPONSIBLE FOR ASSEMBLING AND SECURING ALL FRONT RUNNER PRODUCTS TO YOUR VEHICLE, CHECKING THE ATTACHMENTS PRIOR TO USE, AND PERIODICALLY INSPECTING THE PRODUCTS FOR ADJUSTMENT, WEAR AND DAMAGE. THEREFORE, YOU MUST READ AND UNDERSTAND ALL OF THE INSTRUCTIONS AND PRECAUTIONS SUPPLIED WITH YOUR FRONT RUNNER PRODUCT PRIOR TO INSTALLATION OR USE. IF YOU DO NOT UNDERSTAND ALL OF THE INSTRUCTIONS AND CAUTIONS, OR IF YOU HAVE NO MECHANICAL EXPERIENCE AND ARE NOT THOROUGHLY FAMILIAR WITH THE INSTALLATION PROCEDURES, YOU SHOULD HAVE THE PRODUCT INSTALLED BY A PROFESSIONAL INSTALLER OR OTHER QUALIFIED PERSONNEL.

NOTE: Front Runner will not be responsible for any damage caused by the failure to install the product according to these instructions.

Please call us if you have any questions about the installation of this product.

 © 2020 FRONT RUNNER VEHICLE OUTFITTERS

1 GET ORGANIZED

IN THE BOX

1	1 X	Drop Down Table
2	4 X	M6 Jack Nut
3	2 X	Spacer 6 x 10 x 30
4	8 X	M6 x 19 x 1SS Flat Washer
5	2 X	Spacer 6 x 10 x 35
6	4 X	M6 Spring Washer
7	4 X	M6 x 25 Button Head Bolt
8	4 X	M6 x 50 Button Head Bolt
9	1 X	Installer Wrench
10	4 X	M6 x 30 Button Head Bolt
11	3 X	M6 x 12 Button Head Bolt
12	6 X	M6 x 12 x 1SS Flat Washer
13	3 X	M6 Nyloc Nuts
14	1 X	Support Bracket For Jeep JL
15	4 X	Spacer 10mm x 8mm ID

TOOLS NEEDED

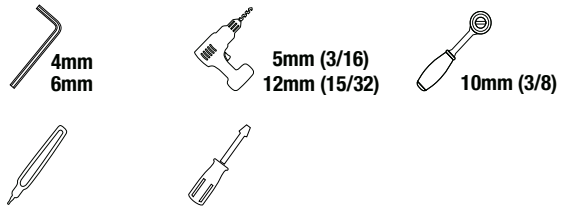

FIGURE 1.1

© 2020 FRONT RUNNER VEHICLE OUTFITTERS

2 FIT AND SECURE

2.1

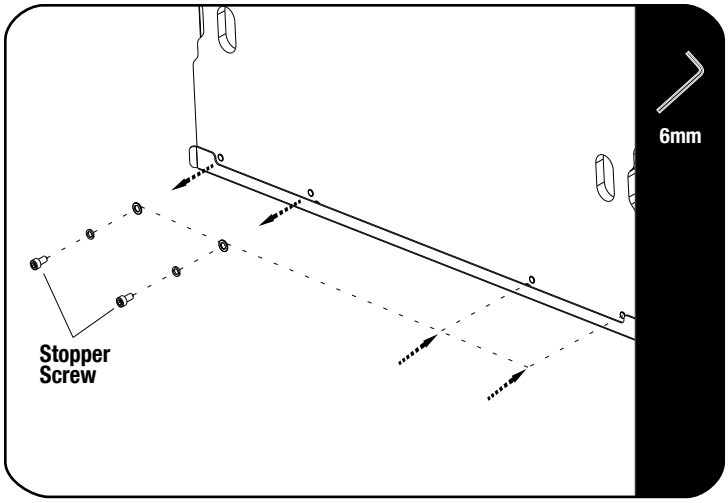

If your vehicle has a door that opens to the left side, you need to reposition the two Stopper Screws. Do this by removing them from the left side of the Sliding Board and refitting them on the right side as shown in Step 2.1.

If your vehicle has a door that opens to the right side, move on to Step 2.2.

2.2

Find a suitable flat surface for the table.

Before marking, make sure that the Sliding Board can slide out of the table without any interference .

FOR JEEP JK INSTALLATION

If you are fitting the Drop Down Table to a Jeep JK, refer to Step 2.2 for positioning.

Remove the trim panel if fitted.

Close the rear door and place the table on the floor inside the Jeep with the back of the table against the inside of the door.

Move the Drop Down Table as far to the right as possible as shown in 2.2.

2.3

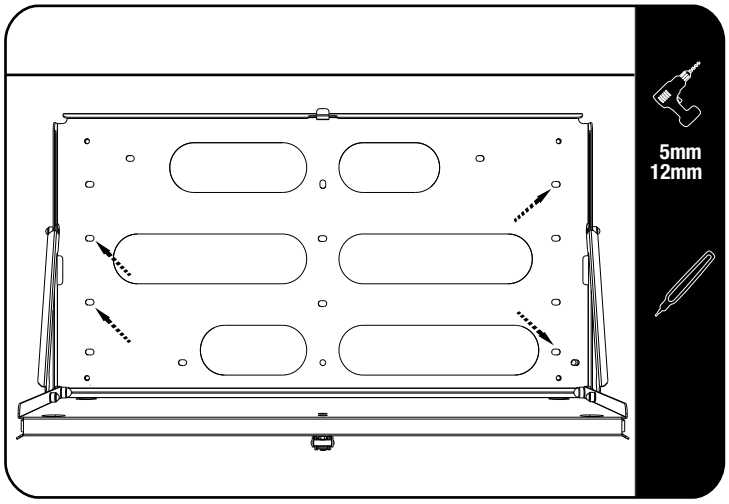

Open the table and mark out the four fixing points shown in 2.3.

Drill 5mm pilot holes on the marks made, using light pressure and taking care only to drill through the interior panel. Open the holes to 12mm.

© 2020 FRONT RUNNER VEHICLE OUTFITTERS

2 FIT AND SECURE

2.4

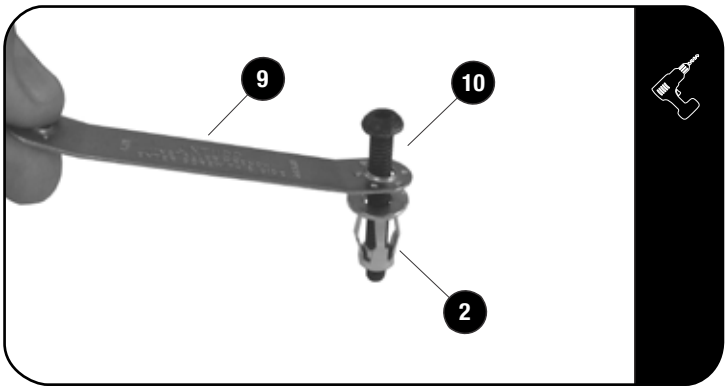

Insert an M6 x 30 Button Head Bolt (Item 10) into the one side of the Installer Wrench (Item 9).

Loosely tighten a Jack Nut (Item 2) onto the Button Head Bolt as shown.

Place the assembly into one of the holes drilled in Step 2.3. Using a Cordless Drill and a 4mm Allen Key Bit, set the Jack Nut into the hole while holding the Installer Wrench firmly.

Make sure that the Jack Nut has pulled up all the way to the inside skin of the door panel.

2.5

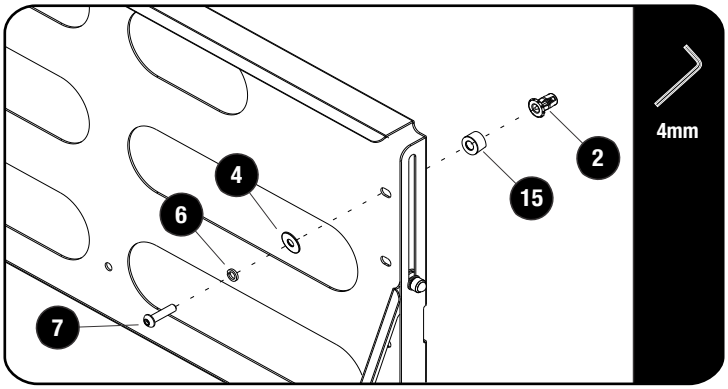

Secure the Drop Down Table using M6 x 25 Button Heads, M6 SS Spring Washer, M6 x 12 x 1 SS Flat Washers and Spacers (Items 4, 6, 7 & 15) as shown.

The table may touch the mat for models fitted with a floor subwoofer.

TIP: Keep the door closed for 24 hours which will allow the mat to form according to the table.

3 FIT AND SECURE DROP DOWN TABLE TO JEEP JL

3.1

FOR JEEP JL INSTALLATION

Remove the Cover Panel from the rear door interior panel by carefully unclipping it with a panel tool or similar.

© 2020 FRONT RUNNER VEHICLE OUTFITTERS

3 FIT AND SECURE DROP DOWN TABLE TO JEEP JL

3.2

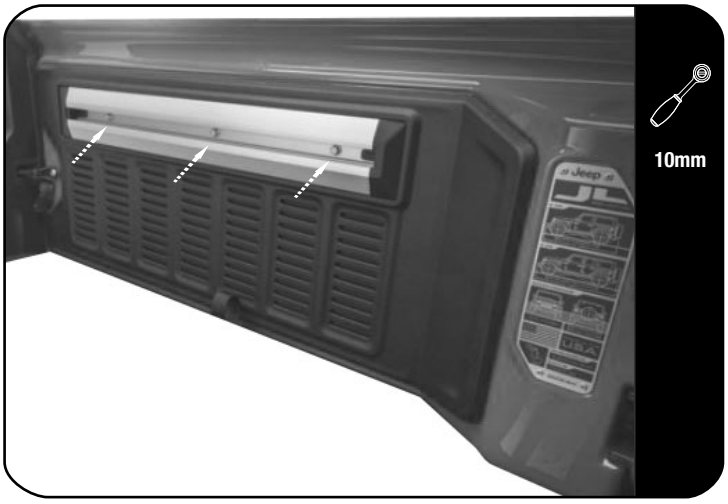

10mm

If your vehicle has the Sports Rail fitted, remove it by loosening and removing the 3 bolts shown.

3.3

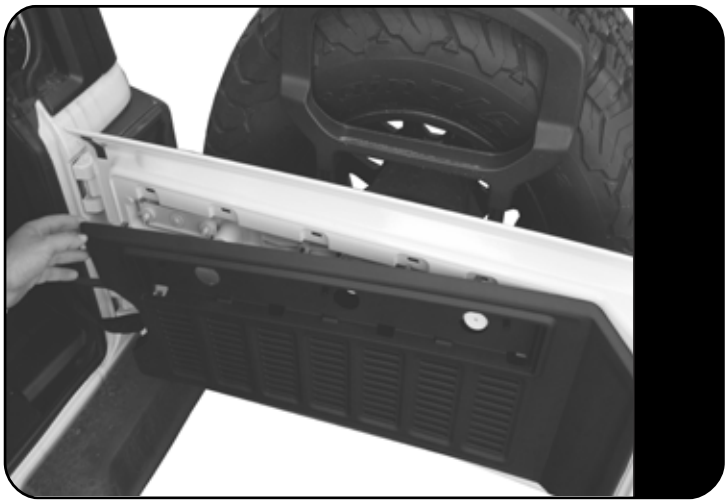

Remove the Trim Panel.

3.4

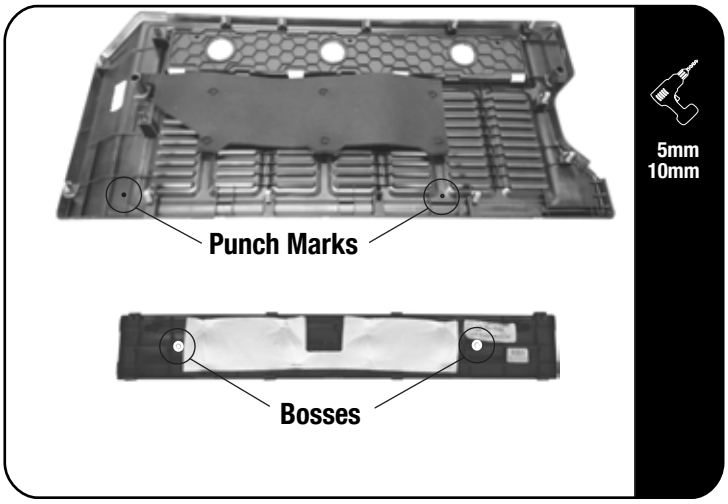

5mm
10mm

Looking at the inside of the Trim Panel, locate the two factory indicator marks shown.

Using a 5mm drill bit, drill pilot holes on these marks. Open the holes with a 10mm drill bit.

Looking on the inside of the smaller top trim panel, locate the two round bosses shown.

Using an 5mm drill bit, drill a pilot holes in the center of each boss. Open the holes with a 10mm drill bit.

© 2020 FRONT RUNNER VEHICLE OUTFITTERS

3 FIT AND SECURE DROP DOWN TABLE TO JEEP JL

3.5

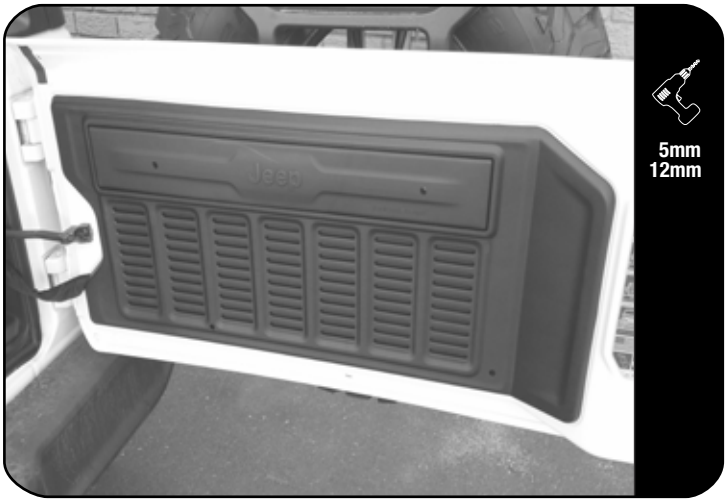

Refit the Big and Small Trim Panel to the rear door.

3.6

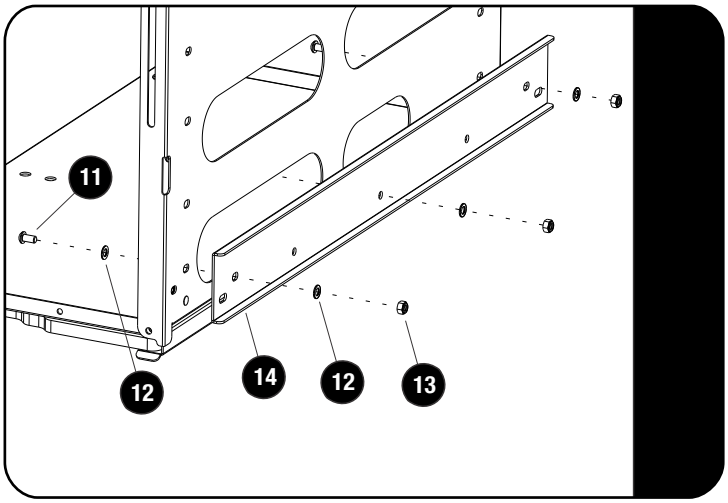

Secure the Support Bracket (Item 14) to the back of the Drop Down Table using M6 x 12 Button Head Bolts, M6 x 12 x 1SS Flat Washers and M6 Nyloc Nuts (Items 11, 12 & 13) using the holes shown.

3.7

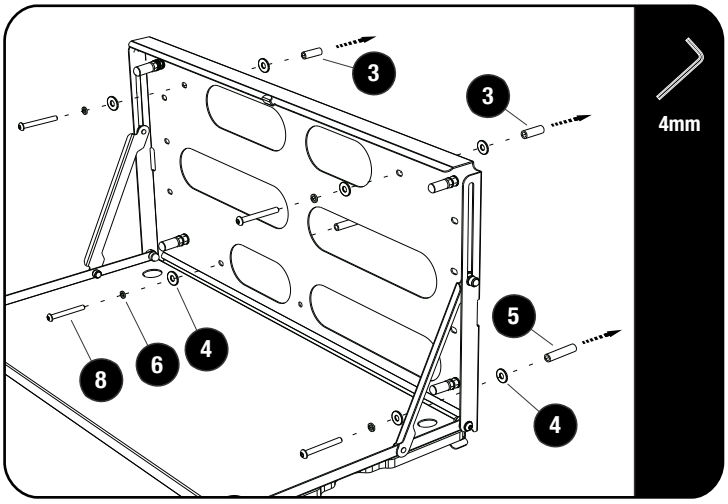

Insert two 30mm Spacers (Item 3) in the top two holes and two 35mm Spacers in the bottom holes drilled earleir in Step 3.5 and 3.6.

Secure the Drop Down Table to the rear door using M6 x 50 Button Head Bolts, M6 SS Spring and M6 x 19 x 1SS Flat Washers (Items 4, 6 & 8) as shown.

 © 2020 FRONT RUNNER VEHICLE OUTFITTERS

3

FINISH

Congratulations! You did it. Take a step back and admire your work!

4

INSTALL OTHER VEHICLE AND RACK ACCESSORIES

Now's the time to visit your favorite Front Runner Dealer in person or online.

Be sure to tag us. We love to see our gear in action! #FrontRunnerOutfitters #BornToRoam

Share your adventures on:

© 2020 FRONT RUNNER VEHICLE OUTFITTERS