FRONT RUNNER

TABLE MKI LARGE WITH UNDER RACK BRACKET KIT

ENG

TBRA022

INSTALL TIME: 15 mins

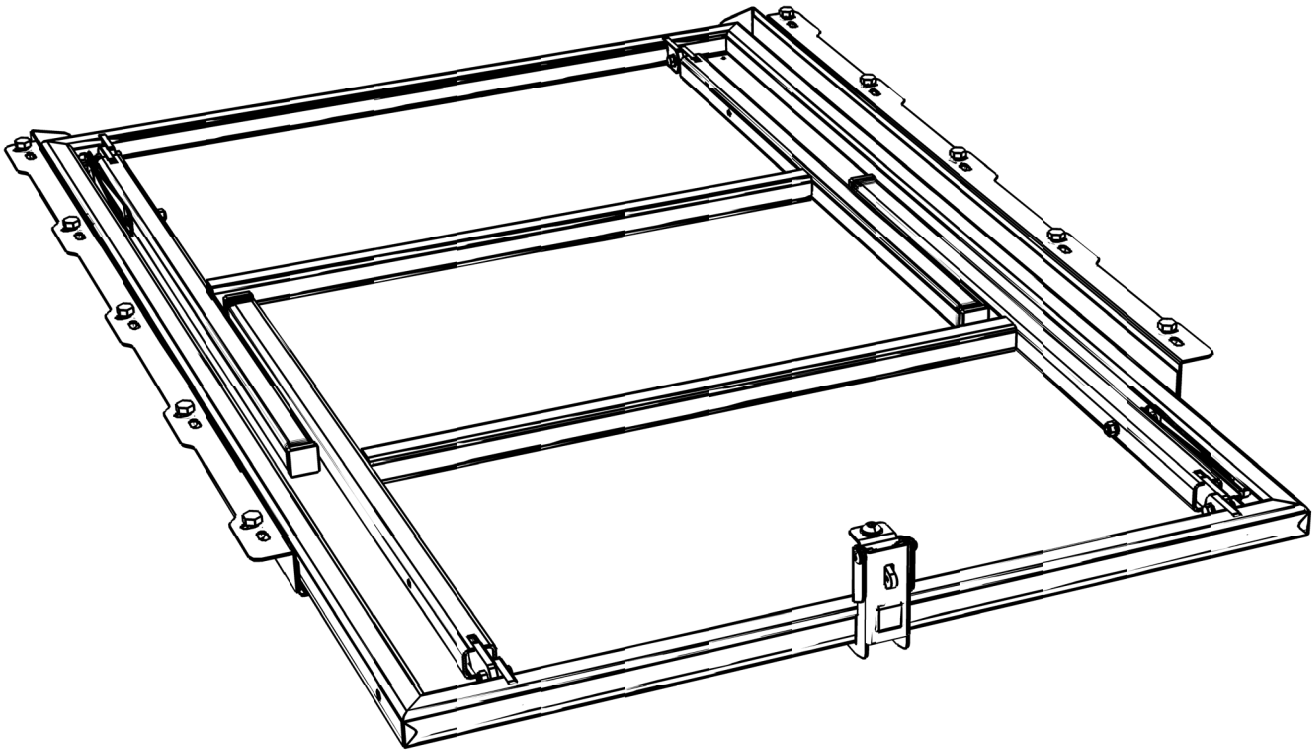

IMPORTANT WARNING!

IT IS CRITICAL THAT ALL FRONT RUNNER PRODUCTS BE PROPERLY AND SECURELY ASSEMBLED AND ATTACHED TO YOUR VEHICLE. IMPROPER ATTACHMENT COULD RESULT IN AN AUTOMOBILE ACCIDENT, AND COULD CAUSE SERIOUS BODILY INJURY OR DEATH TO YOU OR TO OTHERS. YOU ARE RESPONSIBLE FOR ASSEMBLING AND SECURING ALL FRONT RUNNER PRODUCTS TO YOUR VEHICLE, CHECKING THE ATTACHMENTS PRIOR TO USE, AND PERIODICALLY INSPECTING THE PRODUCTS FOR ADJUSTMENT, WEAR, AND DAMAGE. THEREFORE, YOU MUST READ AND UNDERSTAND ALL OF THE INSTRUCTIONS AND CAUTIONS SUPPLIED WITH YOUR FRONT RUNNER PRODUCT PRIOR TO INSTALLATION OR USE. IF YOU DO NOT UNDERSTAND ALL OF THE INSTRUCTIONS AND CAUTIONS, OR IF YOU HAVE NO MECHANICAL EXPERIENCE AND ARE NOT THOROUGHLY FAMILIAR WITH THE INSTALLATION PROCEDURES, YOU SHOULD HAVE THE PRODUCT INSTALLED BY A PROFESSIONAL INSTALLER OR OTHER QUALIFIED PERSONNEL.

© COPYRIGHT 2015 FRONT RUNNER VEHICLE OUTFITTERS

1 GET ORGANIZED...

Here is what you are looking at:

Item #	Quantity	Description
1	1	TABLE
2	2	TABLE SLIDE - 1 LEFT, 1RIGHT
3	6	M8 x 16 HEX BOLT
4	6	M8 FLAT WASHER
5	7	M8 NYLOC NUT
6	6	M8 NUT CAP
7	1	M8 x 20 BUTTON HEAD BOLT
8	1	M8 FLAT WASHER
9	1	LATCH
10	1	T-SLOT RUBBER

You will need:

- ☐ 13 mm Flat or Socket Wrench
- ☐ 5 mm Hex Key
- ☐ Measuring Tape
- ☐ Utility Knife

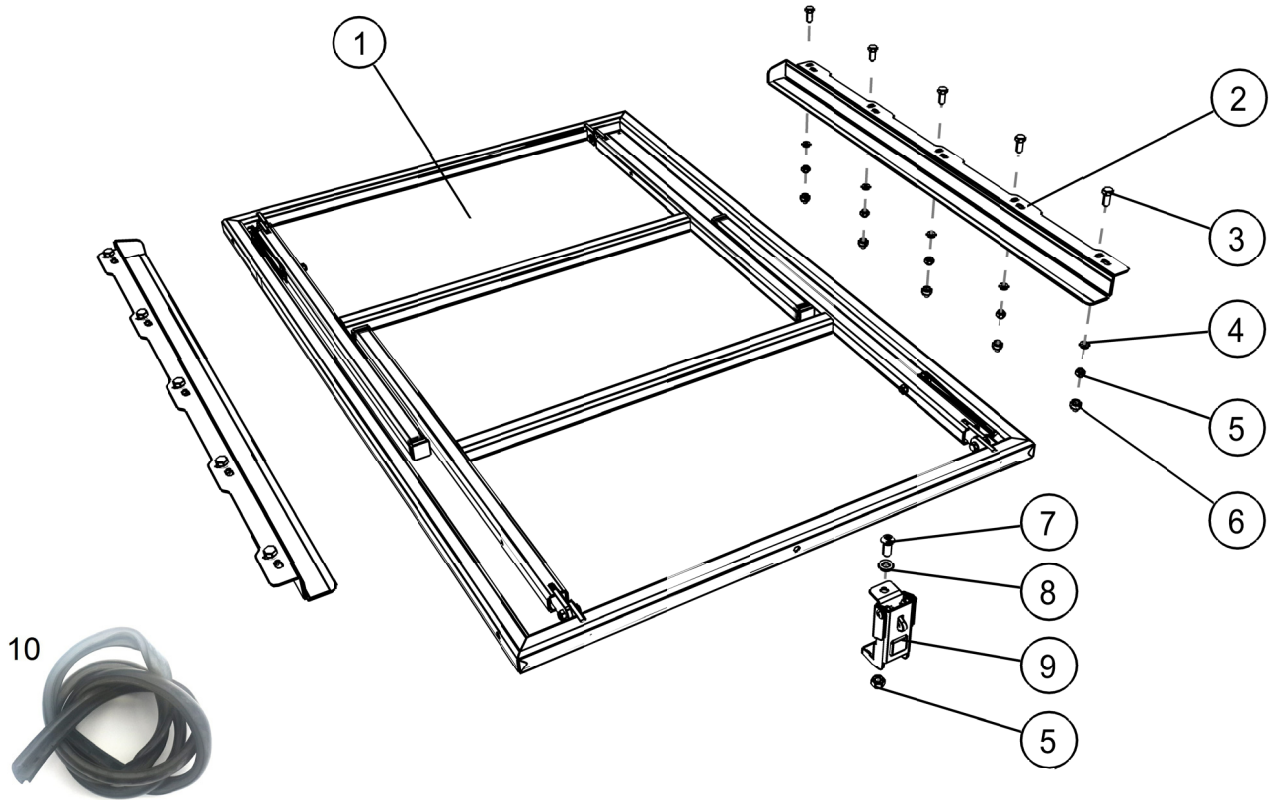

If you wish to mount your Table at the rear of your Rack, please refer to Section 2 - Pages 3 & 4.

If your Rack is mounted using a Foot Rail System and you wish to side mount your Table, please refer to Section 3 - Page 5 & 6.

(A) Familiarize yourself with the parts and then step away from the work area and read through these instructions from beginning to end. Take a moment as a little prep now may save you a lot of time later.

© COPYRIGHT 2015 FRONT RUNNER VEHICLE OUTFITTERS

2 Mounting the Table at the Rear of the Rack

(A) **Working underneath and from the rear of the Rack, Slide two M8 x 16 Hex Bolts (Item 3) into the second, third, fourth, fifth and sixth Slats of the rack through the machined slots as shown. Loosely secure the Table Slides (Item 2) to the Rack using the M8 Flat Washers and M8 Nyloc Nuts (Items 4 & 5) supplied.**

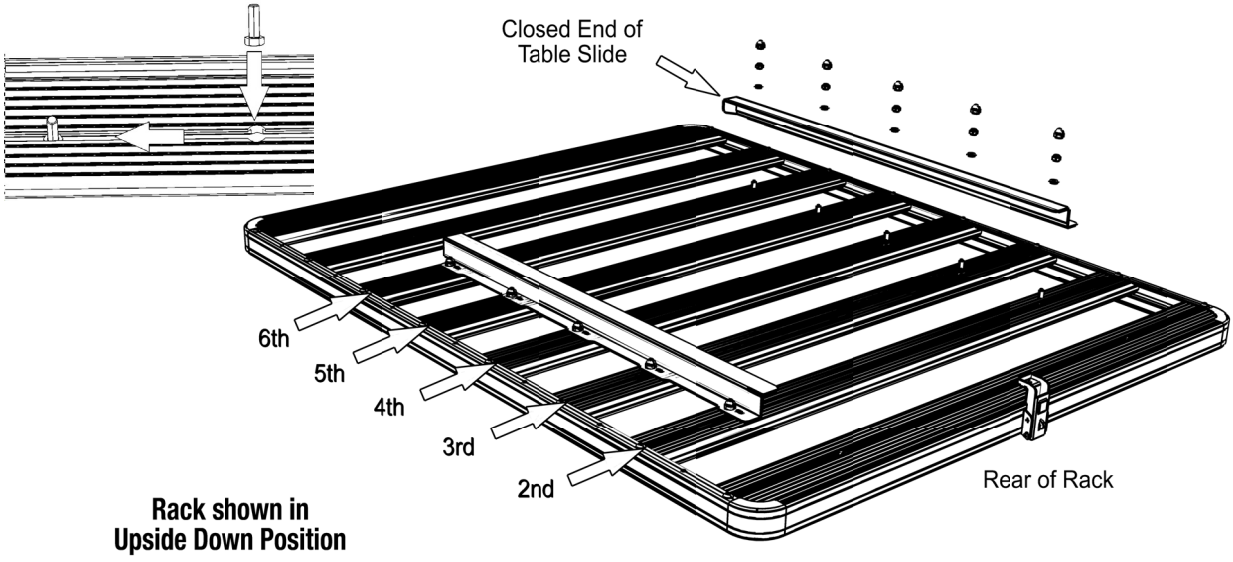

(B) **Space the two Table Slides 750mm apart and tighten all the Nyloc Nuts and place a M8 Nut Cap (Item 6) over each Nyloc Nut.**

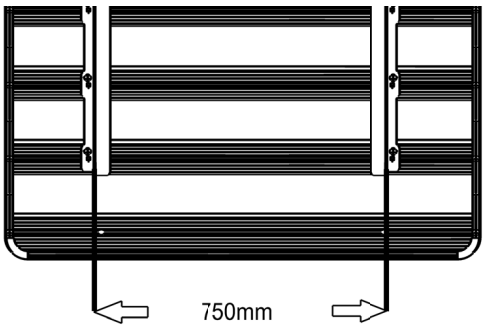

(C) **With the Rack still in the upside down position, cut the T-slot Rubber (Item 10) to suit the width of your Rack and insert it into the rear channel of the first slat by pinching/squeezing the sides of the rubber together and pushing/rolling the Rubber into channel as shown.**

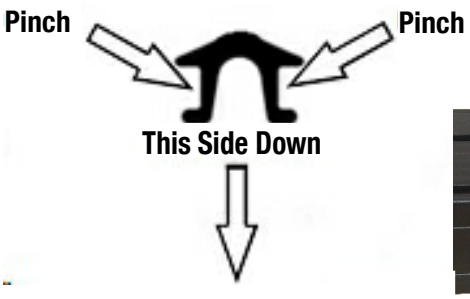

Side View of T-slot
Rubber in Channel

© COPYRIGHT 2015 FRONT RUNNER VEHICLE OUTFITTERS

2 Mounting the table at the rear of the rack cont...

(D)

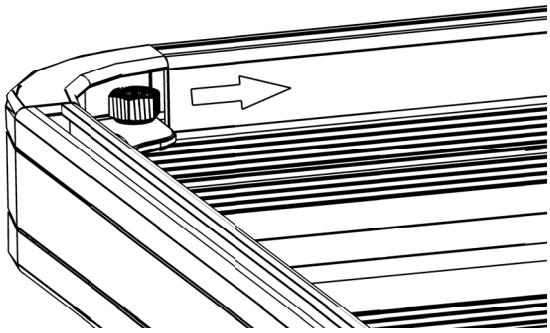

(E) Place the Latch (Item 9) onto the Rack, lining up the mounting hole in the Latch with the Nyloc Nut inserted in Step 2D. Secure the Latch in position using the M8 x 20 Button Head Bolt and M8 Flat Washer (Items 7 & 8).

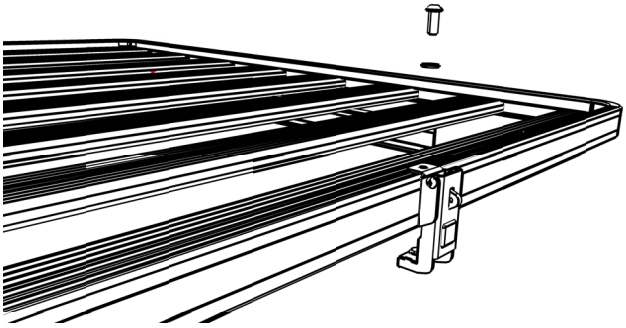

(F) Once the Rack has been mounted to the vehicle, open the Latch by pushing on the Latch Release and slide the Table into position. A small padlock can be used through the hole in the Latch Release should you wish to lock the table.

Congratulations, you have completed your installation. Take a step back and admire your work. Good Job!

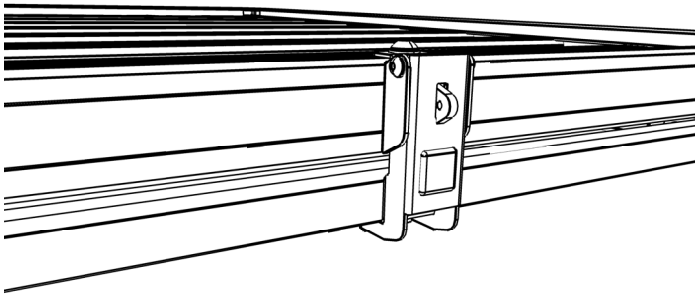

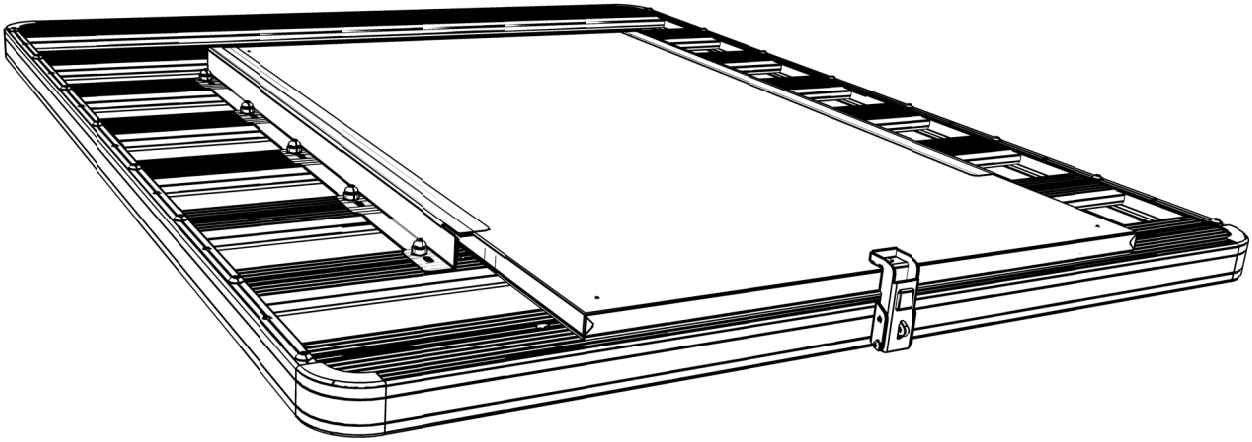

© COPYRIGHT 2015 FRONT RUNNER VEHICLE OUTFITTERS

3 SIDE MOUNTING WITH A FOOT RAIL

(A) **Decide whether you would like your Table (Item 1) to exit on the left or right hand side of the vehicle. The Illustrations in Steps A, B, C show the Brackets positioned for a 750 mm Wide Table.**

(B) **Insert three M8 x 16 Hex Bolts (Item 3) into the two Slat as indicated through the machined slots as shown. Loosely secure the Table Slides (Item 2) to the Rack using the M8 Nyloc Nuts and M8 x 19 Flat Washers (Items 4 & 5) supplied.**

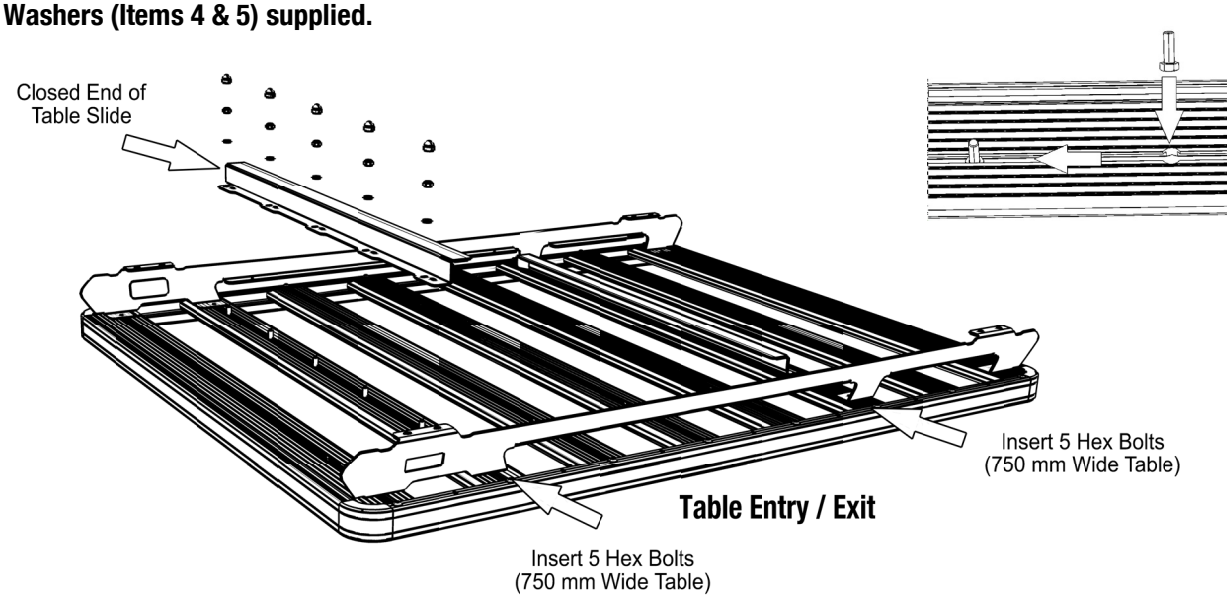

(C) **Space the Table Slides 250 mm in from the edge of the Rack as shown.**

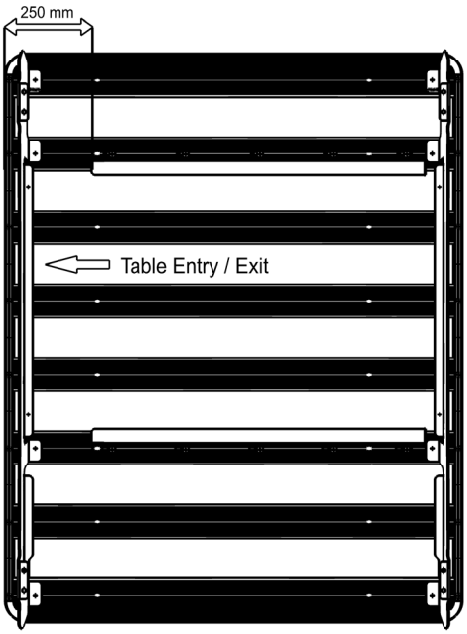

(D) **The Table Slides are slotted left to right to enable adjustment. Space the two Table Slides 750 mm apart and tighten all the Nyloc Nuts. Place a M8 Nut Cap (Item 6) over each Nyloc Nut.**

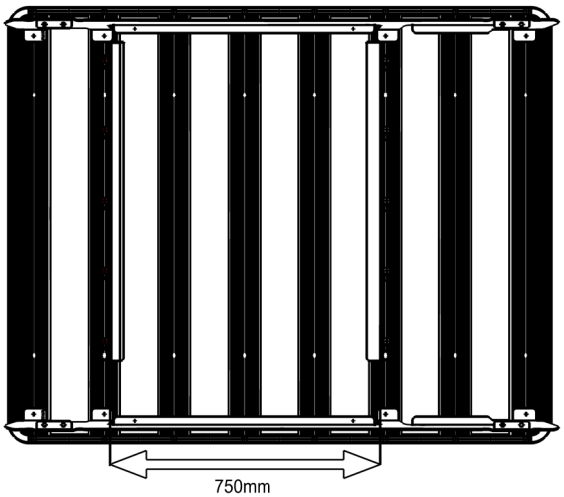

© COPYRIGHT 2015 FRONT RUNNER VEHICLE OUTFITTERS

3 SIDE MOUNTING WITH A FOOT RAIL CONT...

(E) **With the Rack in the upright position and working on the side of the rack that the Table will exit., insert a M8 Nyloc Nut (Item 5) dome side down into the "U" channel of the Rack through the gap in the corner as shown. Slide the Nyloc Nut down the "U" channel and center the Nut between the two Table Slides.**

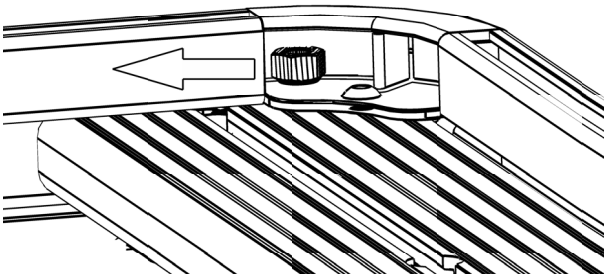

(F) **Place the Latch (Item 9) onto the Rack, lining up the mounting hole in the Latch with the Nyloc Nut inserted in Step 2E. Secure the Latch in position using the M8 x 20 Button Head Bolt and M8 Flat Washer (Items 7 & 8).**

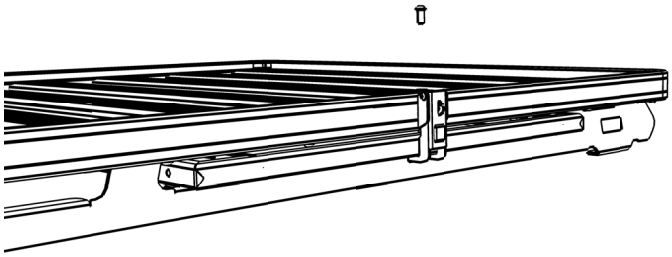

(G) **Once the Rack has been mounted to the vehicle, open the Latch by pushing on the Latch Release and slide the Table into position. A small padlock can be used through the hole in the Latch Release should you wish to lock the table.**

Congratulations, you have completed your installation. Take a step back and admire your work. Good Job!

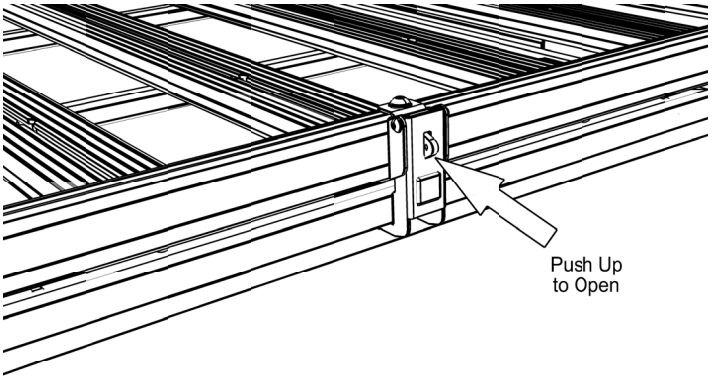

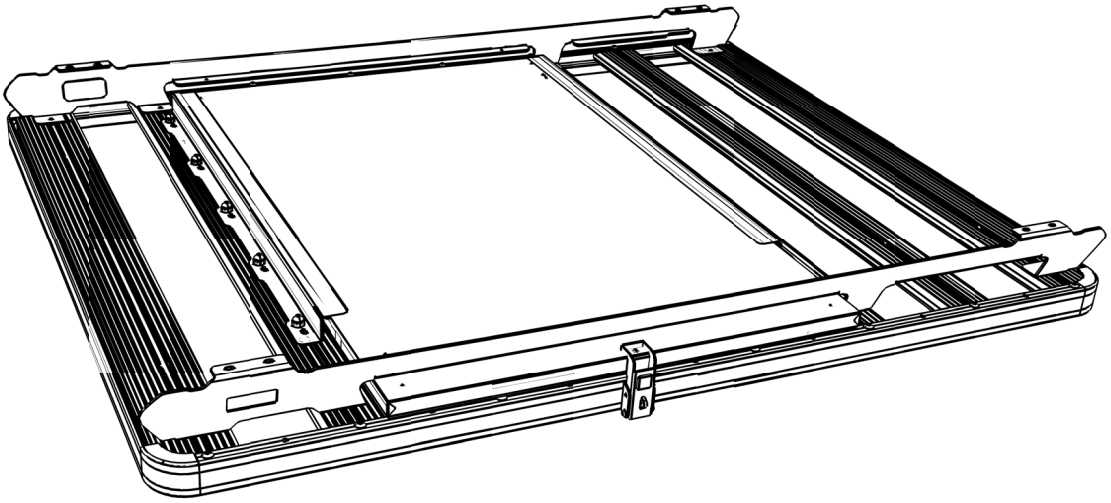

© COPYRIGHT 2015 FRONT RUNNER VEHICLE OUTFITTERS