FRONT RUNNER

UNDER-RACK TABLE SLIDES

ENG

TBRA020

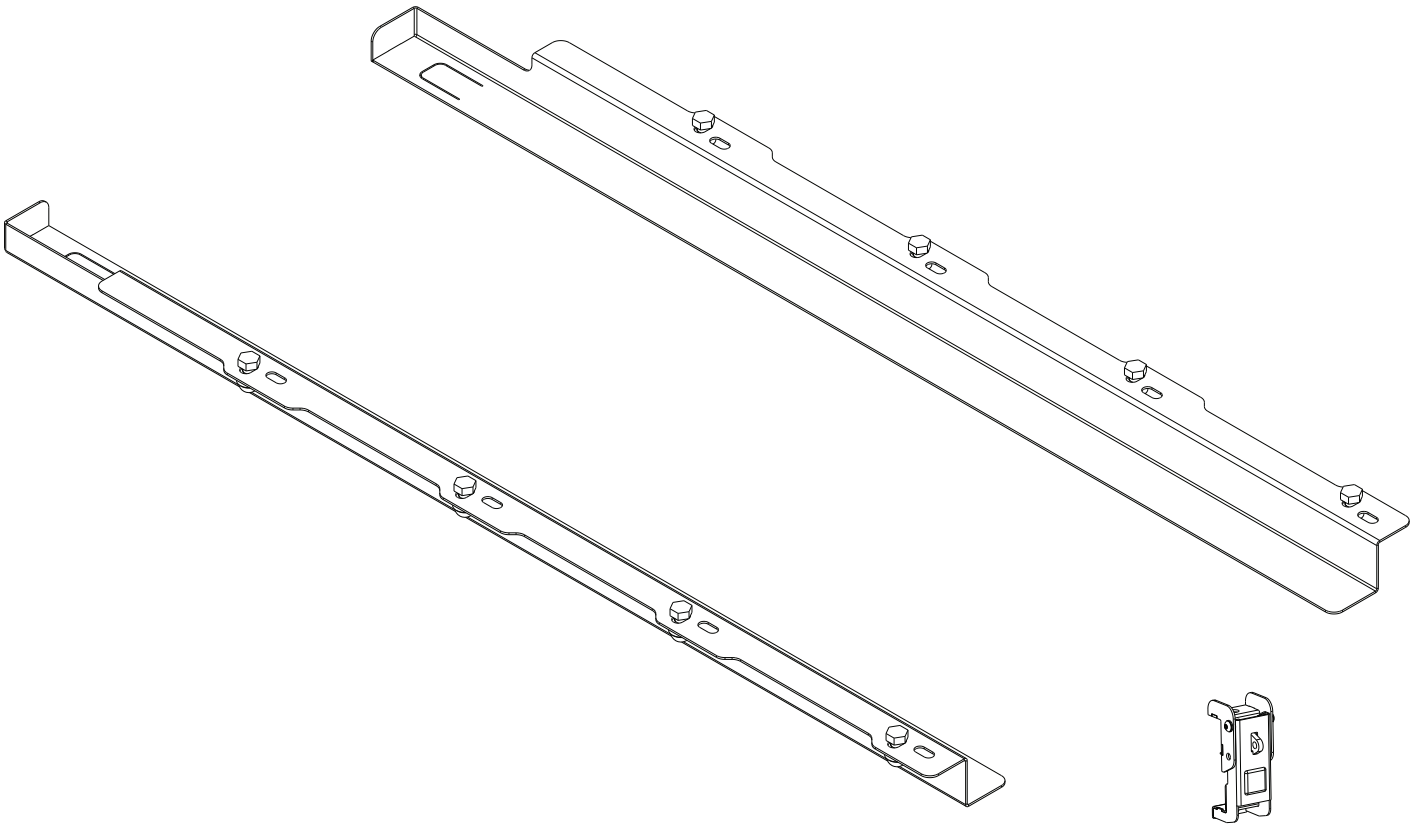

READ ME !

Thank you for purchasing Front Runner Under Rack Table Slides.

Before you start, take a moment to familiarize yourself with the Fitting Instructions and the components received.

Refer to Page 2 for a list of all the components, quantities and tools required.

IMPORTANT WARNING!

IT IS CRITICAL THAT ALL FRONT RUNNER PRODUCTS BE PROPERLY AND SECURELY ASSEMBLED AND ATTACHED TO YOUR VEHICLE. IMPROPER ATTACHMENT COULD RESULT IN AN AUTOMOBILE ACCIDENT, AND COULD CAUSE SERIOUS BODILY INJURY OR DEATH. YOU ARE RESPONSIBLE FOR ASSEMBLING AND SECURING ALL FRONT RUNNER PRODUCTS TO YOUR VEHICLE, CHECKING THE ATTACHMENTS PRIOR TO USE, AND PERIODICALLY INSPECTING THE PRODUCTS FOR ADJUSTMENT, WEAR AND DAMAGE. THEREFORE, YOU MUST READ AND UNDERSTAND ALL OF THE INSTRUCTIONS AND PRECAUTIONS SUPPLIED WITH YOUR FRONT RUNNER PRODUCT PRIOR TO INSTALLATION OR USE. IF YOU DO NOT UNDERSTAND ALL OF THE INSTRUCTIONS AND CAUTIONS, OR IF YOU HAVE NO MECHANICAL EXPERIENCE AND ARE NOT THOROUGHLY FAMILIAR WITH THE INSTALLATION PROCEDURES, YOU SHOULD HAVE THE PRODUCT INSTALLED BY A PROFESSIONAL INSTALLER OR OTHER QUALIFIED PERSONNEL.

NOTE: Front Runner will not be responsible for any damage caused by the failure to install the product according to these instructions.
Please call us if you have any questions about the installation of this product.

 © 2020 FRONT RUNNER VEHICLE OUTFITTERS

1 GET ORGANIZED

IN THE BOX		
1	1 X	Table Slide LH
2	1 X	Table SIde RH
3	10 X	M8 x 16 Hex Bolt
4	10 X	M8 x 16 x 1.6SS Flat Washer
5	10 X	M8 Nyloc Nut
6	10 X	M8 Nut Cap
7	1 X	Table Latch
8	1 X	T-Slot Rubber
9	2 X	M6 Nyloc Nut
10	2 X	M6 x 12 x 1SS Flat Washer
11	2 X	Uni Screw Cap
12	2 X	M6 x 12 Button Head Bolt

TOOLS NEEDED

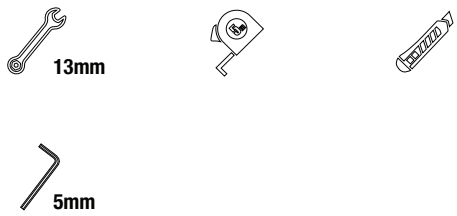

FIGURE 1.1

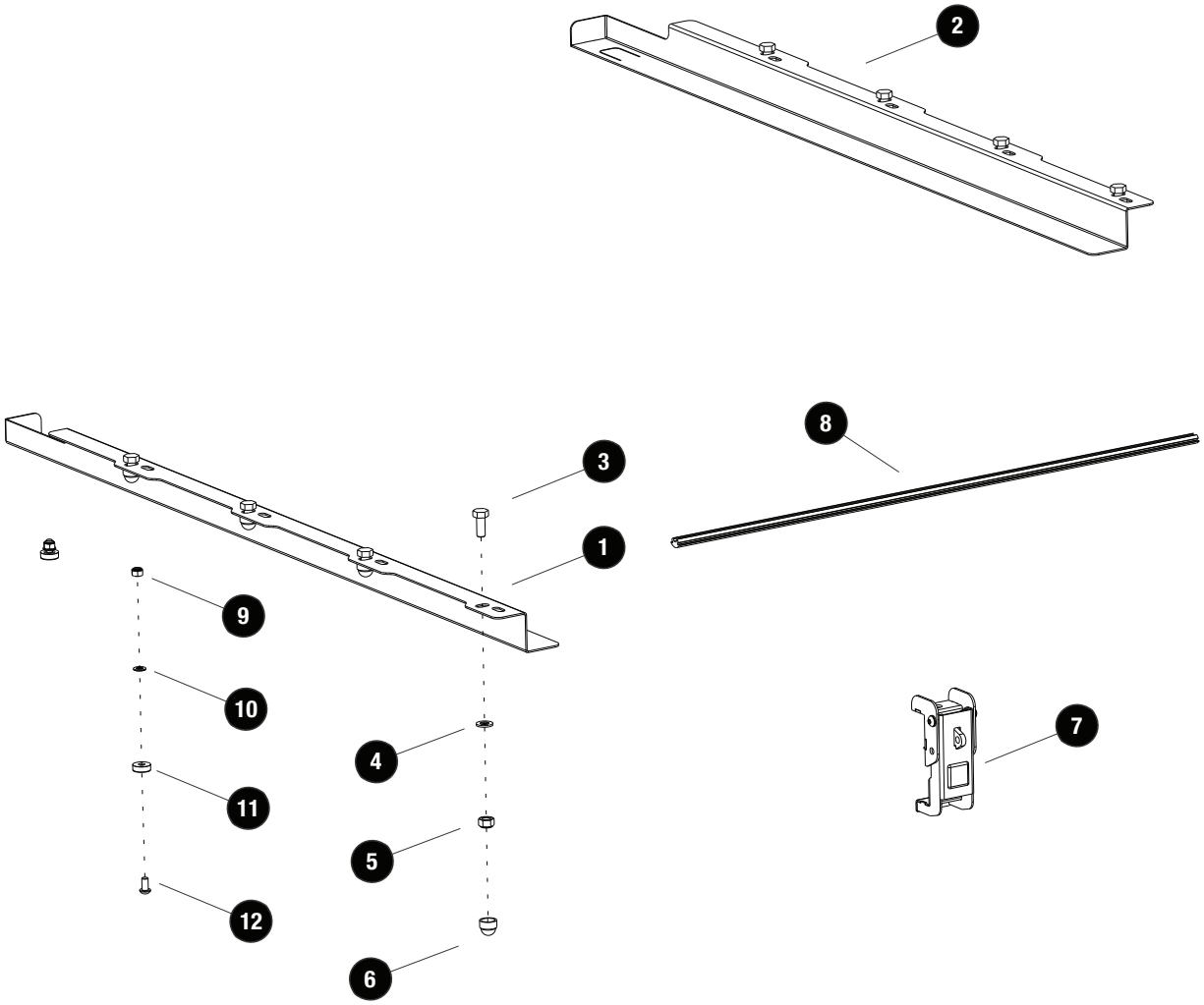

 © 2020 FRONT RUNNER VEHICLE OUTFITTERS

2 FIT AND SECURE - REAR MOUNT

2.1

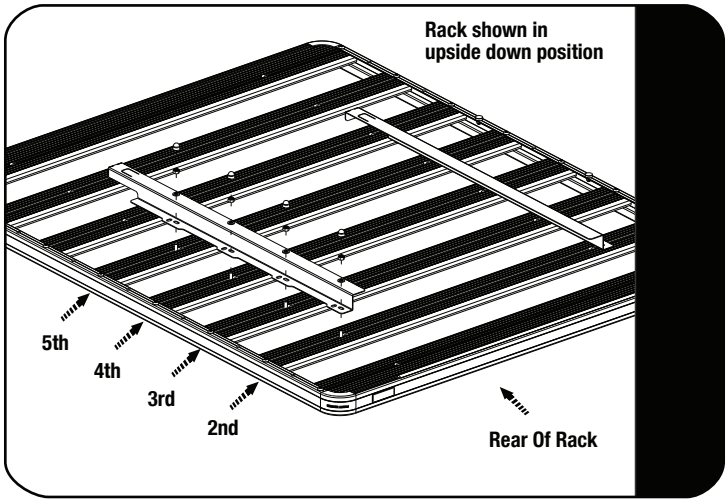

Working underneath and from the rear of the Rack, Slide two M8 x 16 Hex Bolts (Item 3) into the second, third, fourth and fifth Slats of the rack through the machined slots as shown.

Loosely secure the Table Slides (Item 1 & 2) to the Rack using the M8 x 16 Flat Washers and M8 Nyloc Nuts (Items 4 & 5) as shown.

2.2

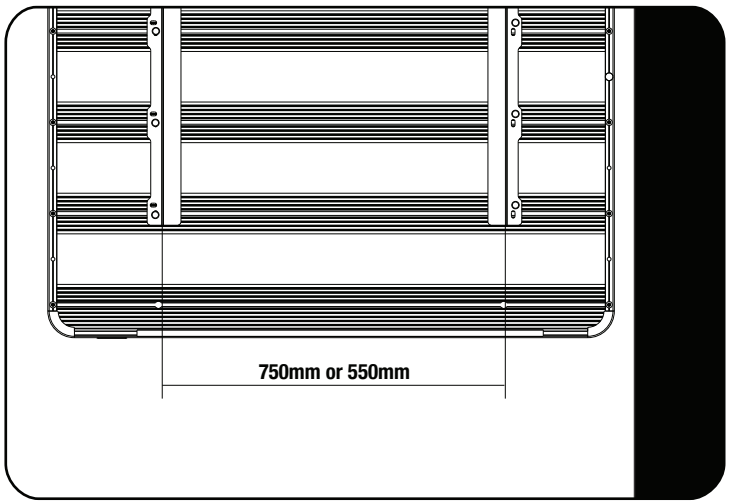

Depending on the Width of your Table, space the two Table Slides 750mm or 550mm apartand tighten all the Nyloc Nuts and place a M8 Nut Cap (Item 6) over each Nyloc Nut.

2.3

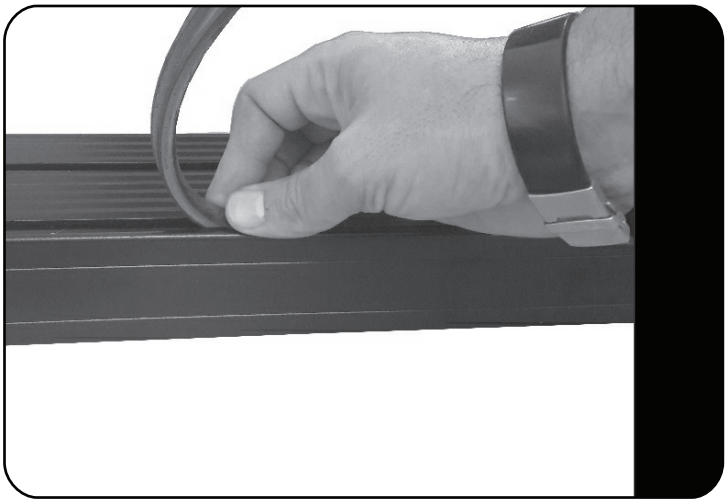

With the Rack still in the upside down position, cut the T-slot Rubber (Item 8) to suit the width of your Rack and insert it into the rear channel of the first slat by pinching / squeezing the sides of the rubber together and pushing / rolling the Rubber into channel as shown.

© 2020 FRONT RUNNER VEHICLE OUTFITTERS

2 FIT AND SECURE - REAR MOUNT

2.4

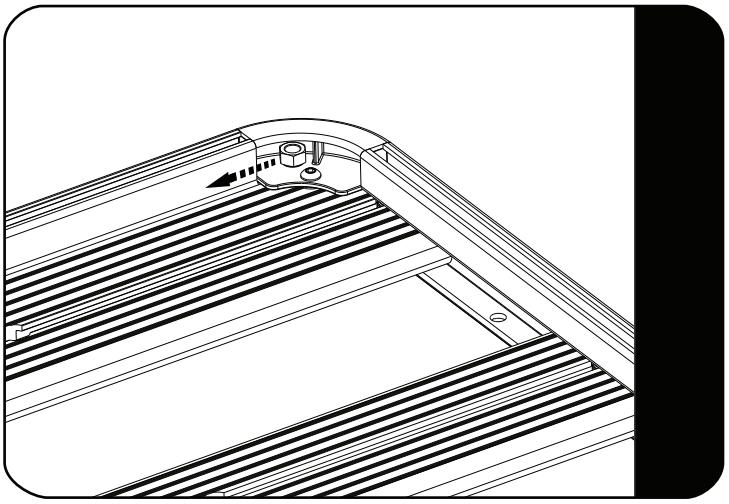

With the Rack in the upright position, Insert a M8 Nyloc Nuts (Item 5) dome side facing down into the 'U" channel of the Rack. Slide the Nyloc Nuts down the "U" channel to the center of the Rack.

2.5

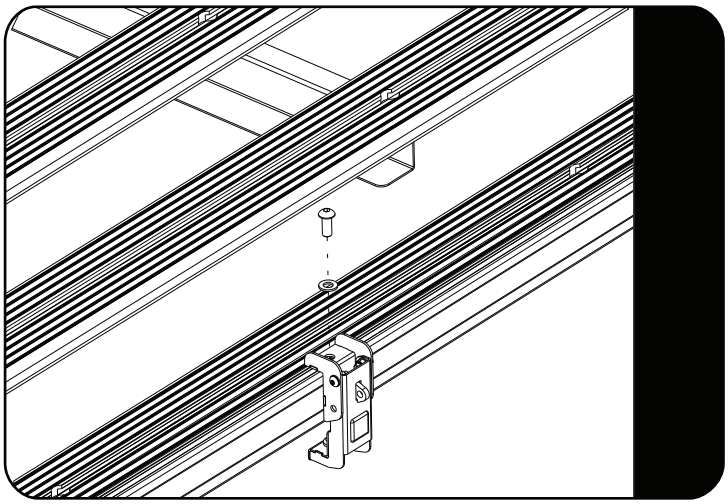

Place the Latch (Item 7) onto the Rack, lining up the mounting hole in the Latch with the Nyloc Nut inserted in 2.4. Secure the Latch in position using a M8 x 20 Button Head Bolt and a M8 Flat Washer.

2.6

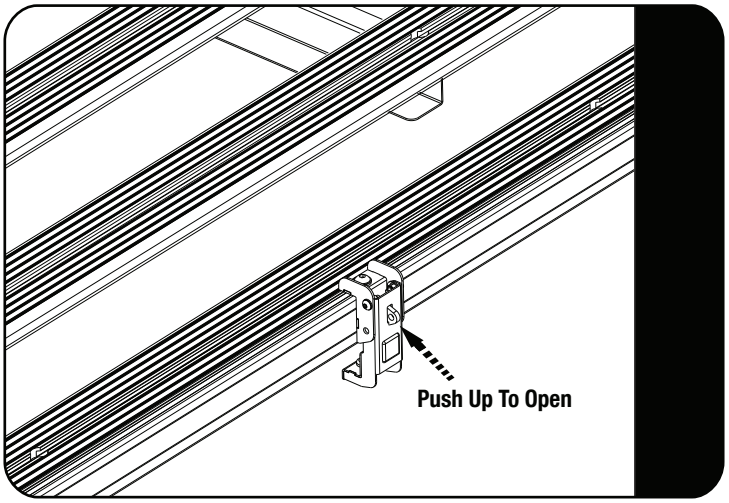

Once the Rack has been mounted to the vehicle, open the Latch by pushing on the Latch Release and slide the Table into position. Check that the table has no Forward / Backward movement when the latch is closed. If it does loosen the Nyloc Hex Nuts (Item 5) from 2.2 and adjust so that the table has no movement in the slides when the latch is closed.

A small pad lock can be used through the hole in the Latch Release should you wish to lock the table.

© 2020 FRONT RUNNER VEHICLE OUTFITTERS

3 FIT AND SECURE

3.1

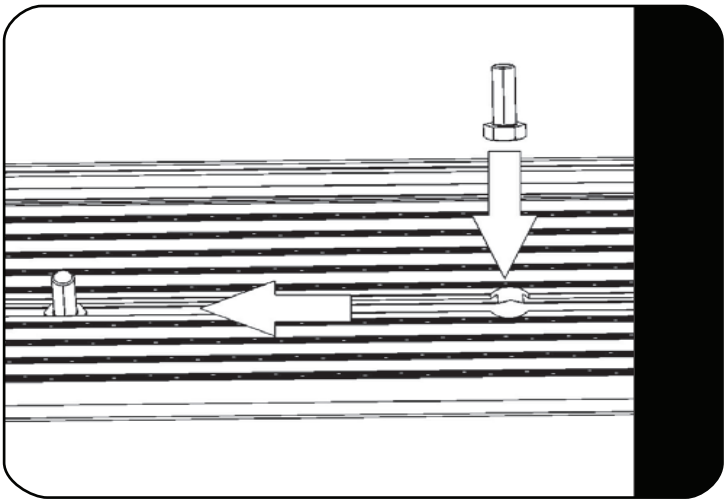

Decide whether you would like your Table (Item 1) to exit on the left or right hand side of the vehicle. There are two Table Widths (550mm & 750mm). The Illustrations in Steps A, B, C show the Brackets positioned for a 750mm Wide Table.

Insert five M8 x 16 Hex Bolts (Item 3) into each of the two Slats as indicated through the machined slots as shown.

3.2

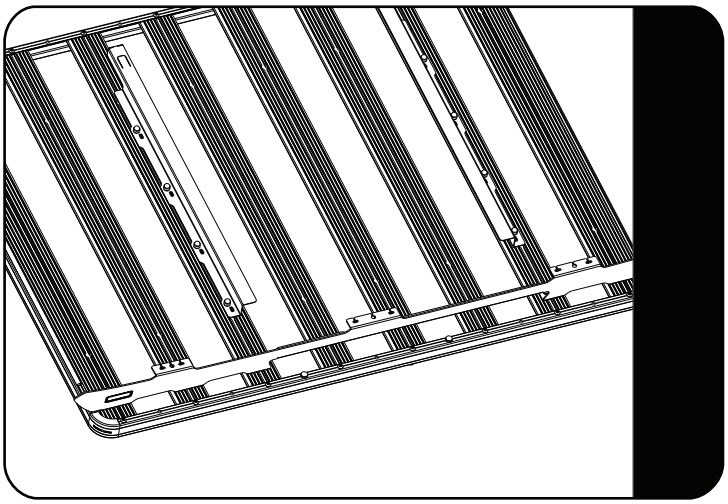

Loosely secure the Table Slides (Item 1 & 2) to the Rack using the M8 Nyloc Nuts and M8 x 19 Flat Washers (Items 4 & 5) supplied.

3.3

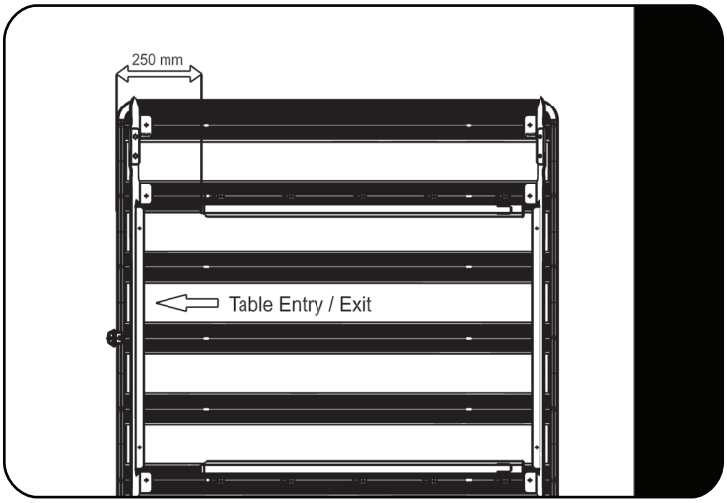

Space the Table Slides 250 mm in from the edge of the Rack as shown.

The Table Slides are slotted left to right to enable adjustment. Space the two Table Slides 750mm or 550mm apart and tighten all the Nyloc Nuts. Place a M8 Nut Cap (Item 6) over each Nyloc Nut.

© 2020 FRONT RUNNER VEHICLE OUTFITTERS

2 FIT AND SECURE

3.4

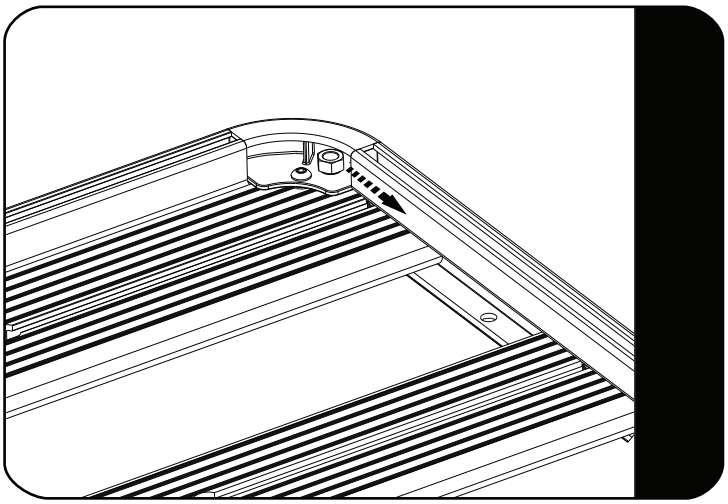

With the Rack in the upright position and working on the side of the rack that the Table will exit, insert a M8 Nyloc Nut (Item 5) dome side down into the "U" channel of the Rack through the gap in the corner as shown. Slide the Nyloc Nut down the "U"channel and center the Nut between the two Table Slides.

3.5

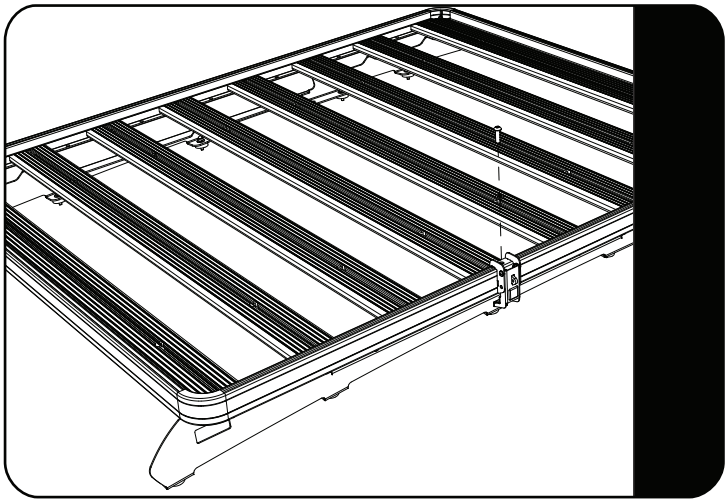

Place the Latch (Item 7) onto the Rack, lining up the mounting holes in the Latch with the Nyloc Nut inserted in Step 3.4. Secure the Latch in position using two M8 x 20 Button Head Bolts and two M8 Flat Washers.

3.6

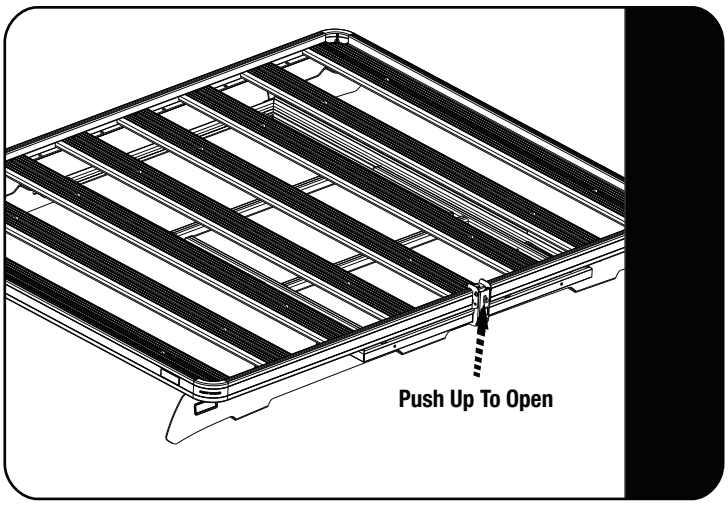

Once the Rack has been mounted to the vehicle, open the Latch by pushing on the Latch Release and slide the Table into position. Check that the table has no Forward / Backward movement when the latch is closed. If it does loosen the Nyloc Hex Nuts (Item 5) from Step 3B and adjust so that the table has no movement in the slides when the latch is closed.

A small padlock can be used through the hole in the Latch Release should you wish to lock the table.

Slide the table into position with the table legs facing upwards.

© 2020 FRONT RUNNER VEHICLE OUTFITTERS

3 TABLE CARE

Keep your table clean and sparkling with these easy care instructions:

Add a small amount of dish soap to a damp cloth. Wipe the table along the grain of your tabletop. Dry the excess moisture with a dry towel.

Quickly add polish by dabbing a small amount of mineral or baby oil, wiping with the grain of the stainless steel. Done.

4 FINISH

Congratulations! You did it. Take a step back and admire your work!

5 INSTALL OTHER VEHICLE AND RACK ACCESSORIES

Now's the time to visit your favorite Front Runner Dealer in person or online.

Be sure to tag us. We love to see our gear in action! #FrontRunnerOutfitters #BornToRoam

Share your adventures on:

© 2020 FRONT RUNNER VEHICLE OUTFITTERS