FRONT RUNNER

QUICK RELEASE TENT MOUNT KIT

ENG

TBMK012

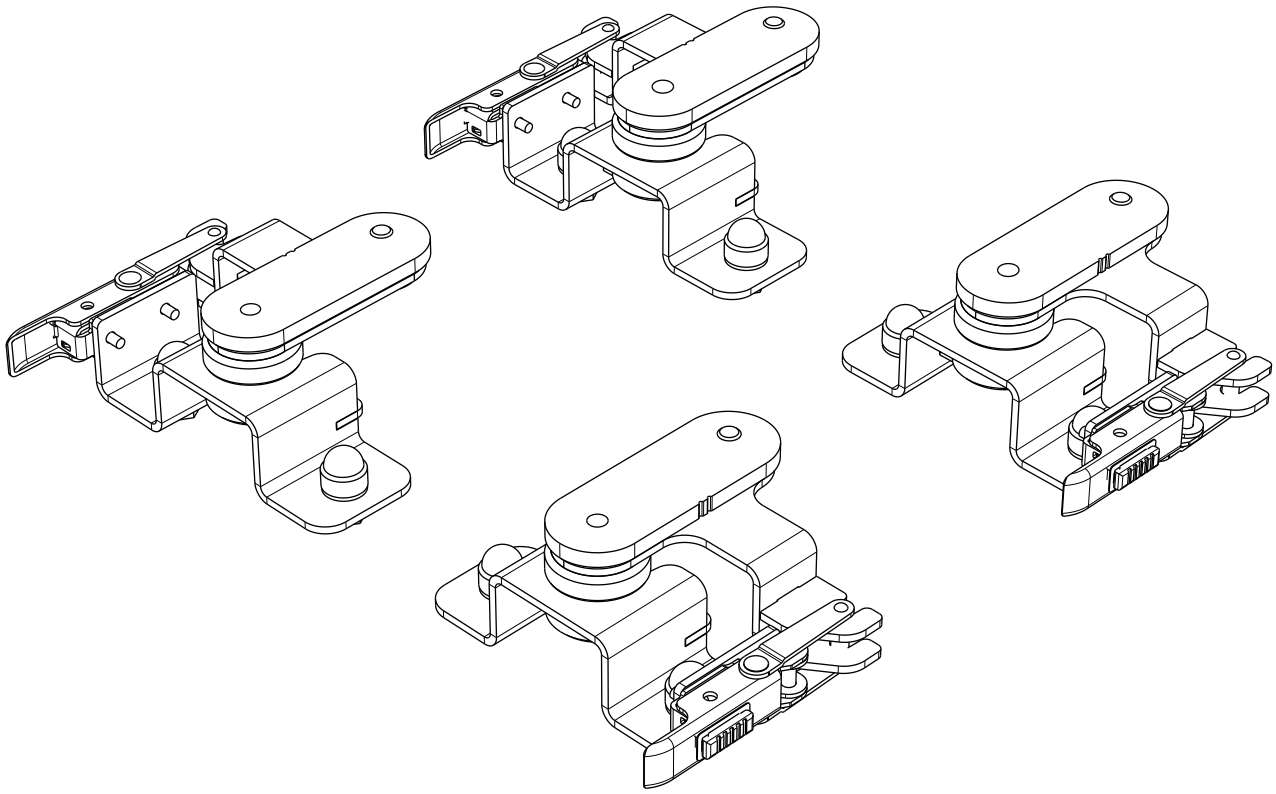

READ ME !

Thank you for purchasing a Front Runner Quick Release Tent Mount Kit.

Before you start, take a moment to familiarize yourself with the Fitting Instructions and the components received.

Refer to Page 2 for a list of all the components, quantities and tools required.

IMPORTANT WARNING!

IT IS CRITICAL THAT ALL FRONT RUNNER PRODUCTS BE PROPERLY AND SECURELY ASSEMBLED AND ATTACHED TO YOUR VEHICLE. IMPROPER ATTACHMENT COULD RESULT IN AN AUTOMOBILE ACCIDENT, AND COULD CAUSE SERIOUS BODILY INJURY OR DEATH. YOU ARE RESPONSIBLE FOR ASSEMBLING AND SECURING ALL FRONT RUNNER PRODUCTS TO YOUR VEHICLE, CHECKING THE ATTACHMENTS PRIOR TO USE, AND PERIODICALLY INSPECTING THE PRODUCTS FOR ADJUSTMENT, WEAR AND DAMAGE. THEREFORE, YOU MUST READ AND UNDERSTAND ALL OF THE INSTRUCTIONS AND PRECAUTIONS SUPPLIED WITH YOUR FRONT RUNNER PRODUCT PRIOR TO INSTALLATION OR USE. IF YOU DO NOT UNDERSTAND ALL OF THE INSTRUCTIONS AND CAUTIONS, OR IF YOU HAVE NO MECHANICAL EXPERIENCE AND ARE NOT THOROUGHLY FAMILIAR WITH THE INSTALLATION PROCEDURES, YOU SHOULD HAVE THE PRODUCT INSTALLED BY A PROFESSIONAL INSTALLER OR OTHER QUALIFIED PERSONNEL.

NOTE: Front Runner will not be responsible for any damage caused by the failure to install the product according to these instructions.

Please call us if you have any questions about the installation of this product.

 © 2021 FRONT RUNNER VEHICLE OUTFITTERS

1 GET ORGANIZED

IN THE BOX

1	2 X	Mount Brackets with Non Adjustable Latch (RH)
2	2 X	Mount Brackets with Non Adjustable Latch (LH)
3	4 X	Channel Nut Plate - (Front Runner Tent)
4	4 X	Latch Brackets
5	4 X	M8 x 25 x 3 Flat Washer
6	4 X	M8 Spring Washer
7	4 X	M8 x 20 Button Head
8	4 X	Bobbin
9	4 X	M8 Low Head Cap Screw
10	8 X	M8 x 20 Hex Bolt
11	8 X	M8 Flat Washer
12	8 X	M8 Nyloc Washer
13	8 X	M8 Nut Cap

TOOLS NEEDED

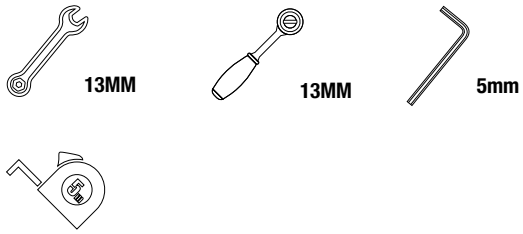

FIGURE 1.1

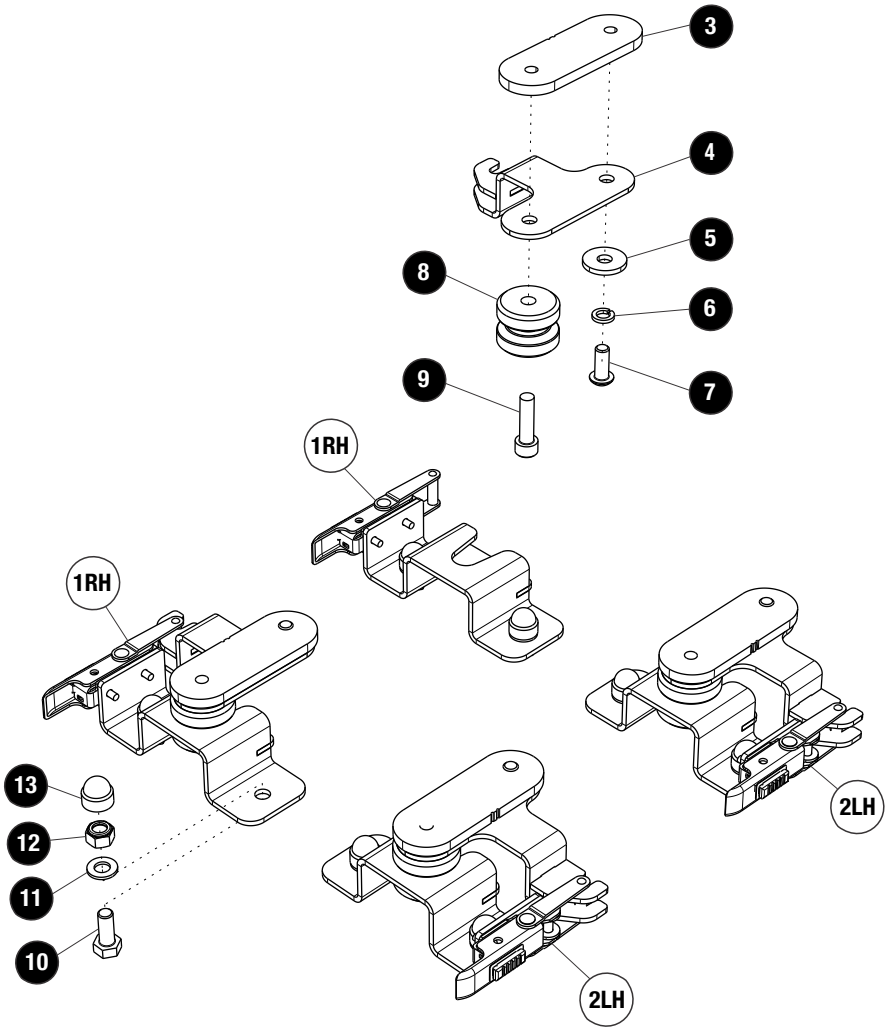

 © 2021 FRONT RUNNER VEHICLE OUTFITTERS

2 FIT AND SECURE

2.1

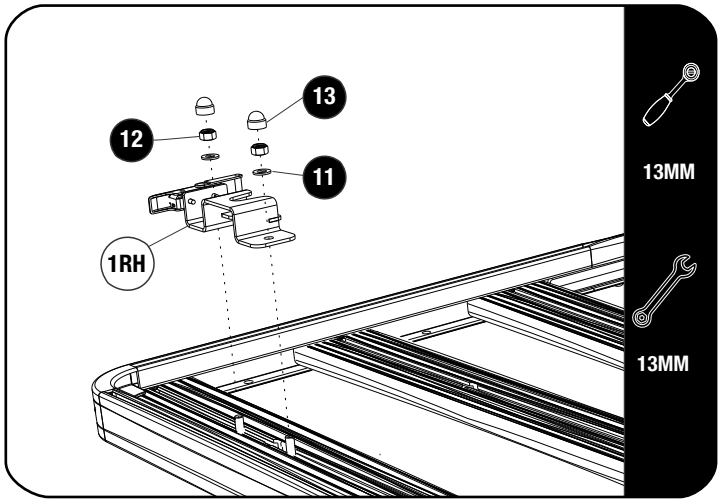

Taking into account the length and width of your tent, choose where you'd like to position it on the rack. This will determine where you need to fit the Mount Brackets (Items 1 & 2).

Where possible use the combined slats to mount the brackets. If this is not possible then a slat with a leg or foot installed.

Loosely fit the Mount Brackets to the rack using M8 x 20 Hex Bolts, M8 x 16 x 1.6SS Flat Washers and M8 Nyloc Nuts (Items 10, 11 & 12). Note the position of the Mount Brackets and the Latch orientation.

Make sure that the closed side of the Mount Brackets are facing toward the front of the rack and that they are parallel to the side of the rack.

2.2

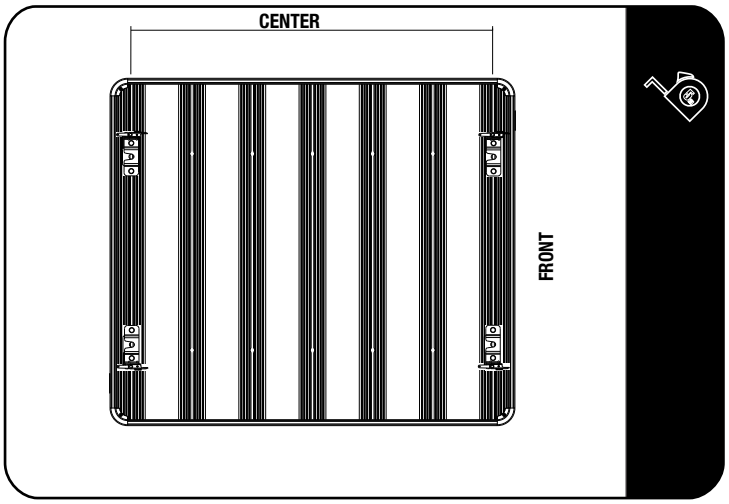

Measure the distance between the center points of the Rack Mount Brackets. You will need this measurement for fitting the Latch Bracket assembly to the tent channel in Step 2.6.

2RH Right Hand Mount

2LH Left Hand Mount

2.3

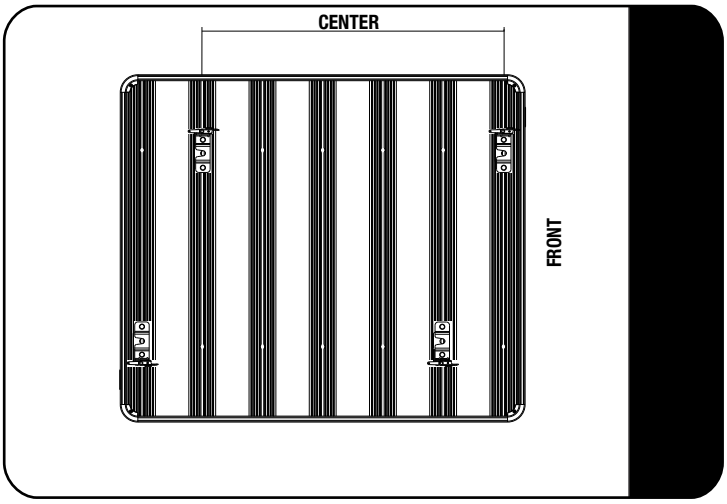

For larger & heavier tents stagger the tent mounting brackets as shown.

2RH Right Hand Mount

2LH Left Hand Mount

Extra Mounting Brackets may be required for some tent and rack combinations.

© 2021 FRONT RUNNER VEHICLE OUTFITTERS

2 FIT AND SECURE

2.4

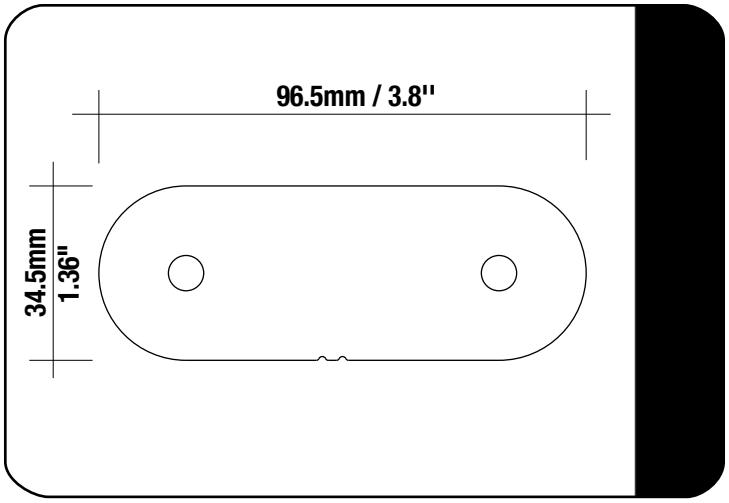

The Tent Channel Nut Plate included were designed for the Front Runner Tent but will also work with other popular tents. Check your mounting channel measurements for the appropriate size.

2.5

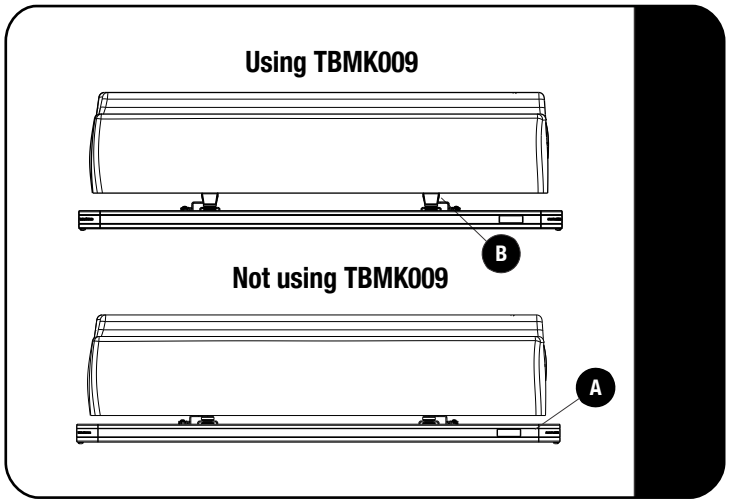

Hard shell tents may need additional support. If you are using these brackets with hard shell tents, such as James Baroud, iKamper & Autohome, and you are unable to position the tent to rest directly on the rack side profiles (A), use TBMK009 – Hard Shell Tent Support Channels - by Front Runner (B) sold seperatly.

Depending on the tent manufacturer, your hard shell tent warranty may be voided if your tent becomes damaged and you did not provide proper lateral support for the hard shell tent.

2.6

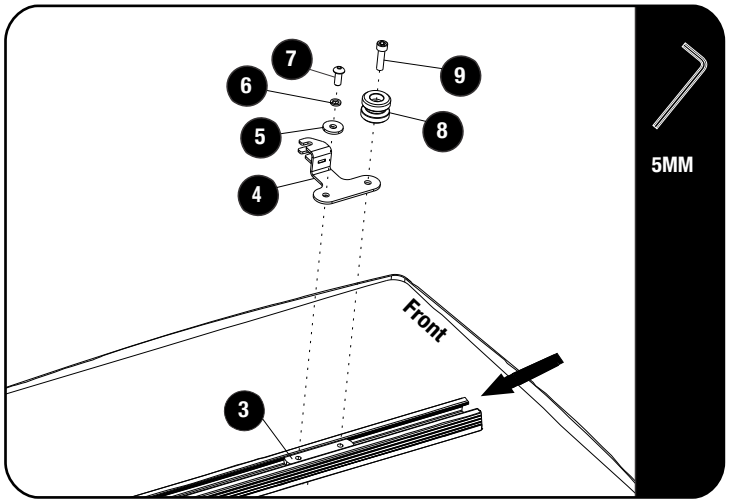

Flip your tent over to access the mounting channels

Loosely fit the latch bracket assembly (Item 4) by sliding the channel nut plate (Item 3) into the mounting channel and fastening with (Items 5, 6, 7, 8 & 9) as shown.

Make sure the bobbins (Item 8) are facing towards the front of the rack as shown.

© 2021 FRONT RUNNER VEHICLE OUTFITTERS

2 FIT AND SECURE

2.7

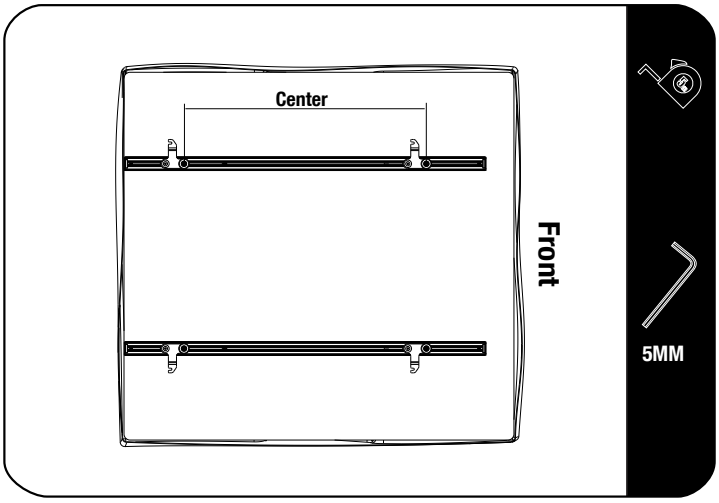

Measure the distance between the centers of Channel Feet to make sure it matches the position of the Rack Mount Brackets installed in Step 2.2.

Once measurements have been confirmed, fully tighten the Latch Bracket Assembly to the tent channel.

2.8

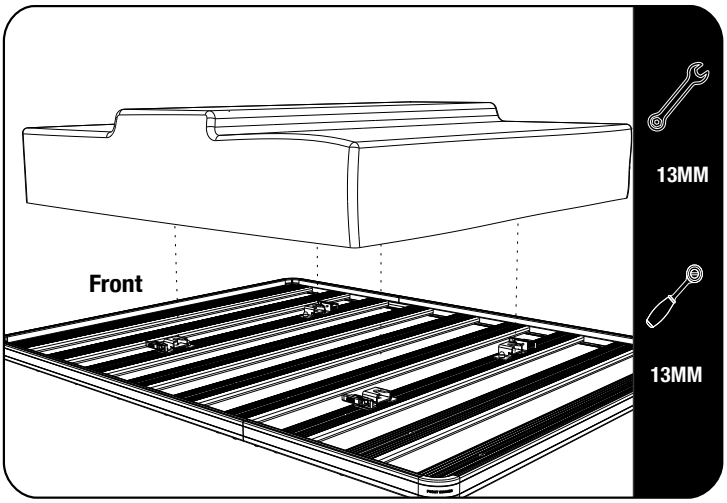

Flip the tent over and lower it onto the rack making sure the Bobbins align with the Rack Mount Brackets.

Push the tent forward so that the Guide Bolts slide fully into the Rack Mount Brackets.

Latch all 4 Latches to secure the tent into the brackets.

3 FINISH

Congratulations! You did it. Take a step back and admire your work!

4 INSTALL OTHER VEHICLE AND RACK ACCESSORIES

Now's the time to visit your favorite Front Runner Dealer in person or online.

Be sure to tag us. We love to see our gear in action! #FrontRunnerOutfitters #BornToRoam

Share your adventures on:

© 2021 FRONT RUNNER VEHICLE OUTFITTERS