FRONT RUNNER
VEHICLE OUTFITTERS

QUICK RELEASE TENT MOUNT KIT

ENG

TBMK008

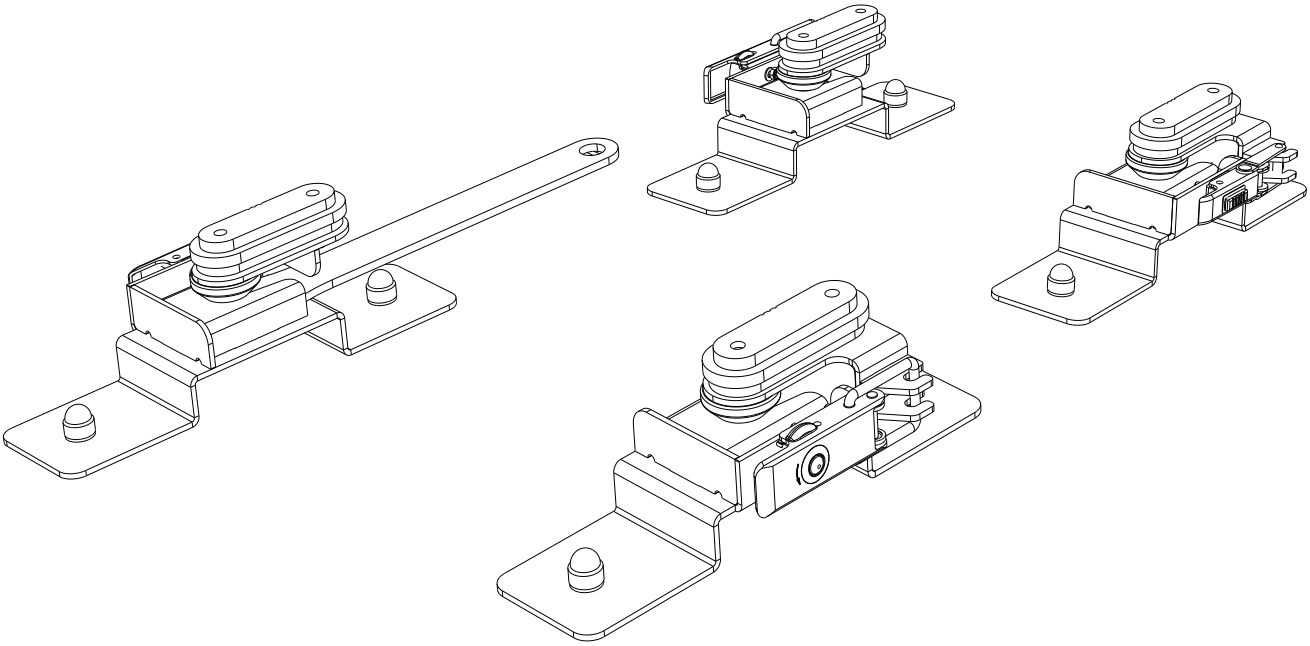

READ ME !

Thank you for purchasing a Front Runner Quick Release Tent Mount Kit.

Before you start, take a moment to familiarize yourself with the Fitting Instructions and the components received.

Refer to Page 2 for a list of all the components, quantities and tools required.

IMPORTANT WARNING!

IT IS CRITICAL THAT ALL FRONT RUNNER PRODUCTS BE PROPERLY AND SECURELY ASSEMBLED AND ATTACHED TO YOUR VEHICLE. IMPROPER ATTACHMENT COULD RESULT IN AN AUTOMOBILE ACCIDENT, AND COULD CAUSE SERIOUS BODILY INJURY OR DEATH. YOU ARE RESPONSIBLE FOR ASSEMBLING AND SECURING ALL FRONT RUNNER PRODUCTS TO YOUR VEHICLE, CHECKING THE ATTACHMENTS PRIOR TO USE, AND PERIODICALLY INSPECTING THE PRODUCTS FOR ADJUSTMENT, WEAR AND DAMAGE. THEREFORE, YOU MUST READ AND UNDERSTAND ALL OF THE INSTRUCTIONS AND PRECAUTIONS SUPPLIED WITH YOUR FRONT RUNNER PRODUCT PRIOR TO INSTALLATION OR USE. IF YOU DO NOT UNDERSTAND ALL OF THE INSTRUCTIONS AND CAUTIONS, OR IF YOU HAVE NO MECHANICAL EXPERIENCE AND ARE NOT THOROUGHLY FAMILIAR WITH THE INSTALLATION PROCEDURES, YOU SHOULD HAVE THE PRODUCT INSTALLED BY A PROFESSIONAL INSTALLER OR OTHER QUALIFIED PERSONNEL.

NOTE: Front Runner will not be responsible for any damage caused by the failure to install the product according to these instructions.
Please call us if you have any questions about the installation of this product.

© 2019 FRONT RUNNER VEHICLE OUTFITTERS

1 GET ORGANIZED

IN THE BOX

1	2 X	Mount Brackets With Lockable Latch (1LH & 1RH) + Keys
2	2 X	Mount Bracket and Latch w/Safety Catch (1LH & 1RH)
3	4 X	Channel Nut Plates - (Autohome)
	4 X	Channel Nut Plates - (Front Runner)
	4 X	Channel Nut Plates - (James Baroud)
4	4 X	Latch Brackets
5	4 X	Channel Foot
6	12 X	M8 x 16 x 1.6 SS Flat Washer
7	4 X	M8 Spring Washer
8	4 X	M8 x 16 Button Head Screw
9	8 X	M8 Nut Cap
10	8 X	M8 Nyloc Nut
11	8 X	M8 x 20 Hex Bolt
12	1 X	Wrench

TOOLS NEEDED

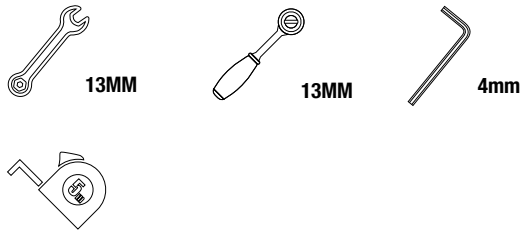

FIGURE 1.1

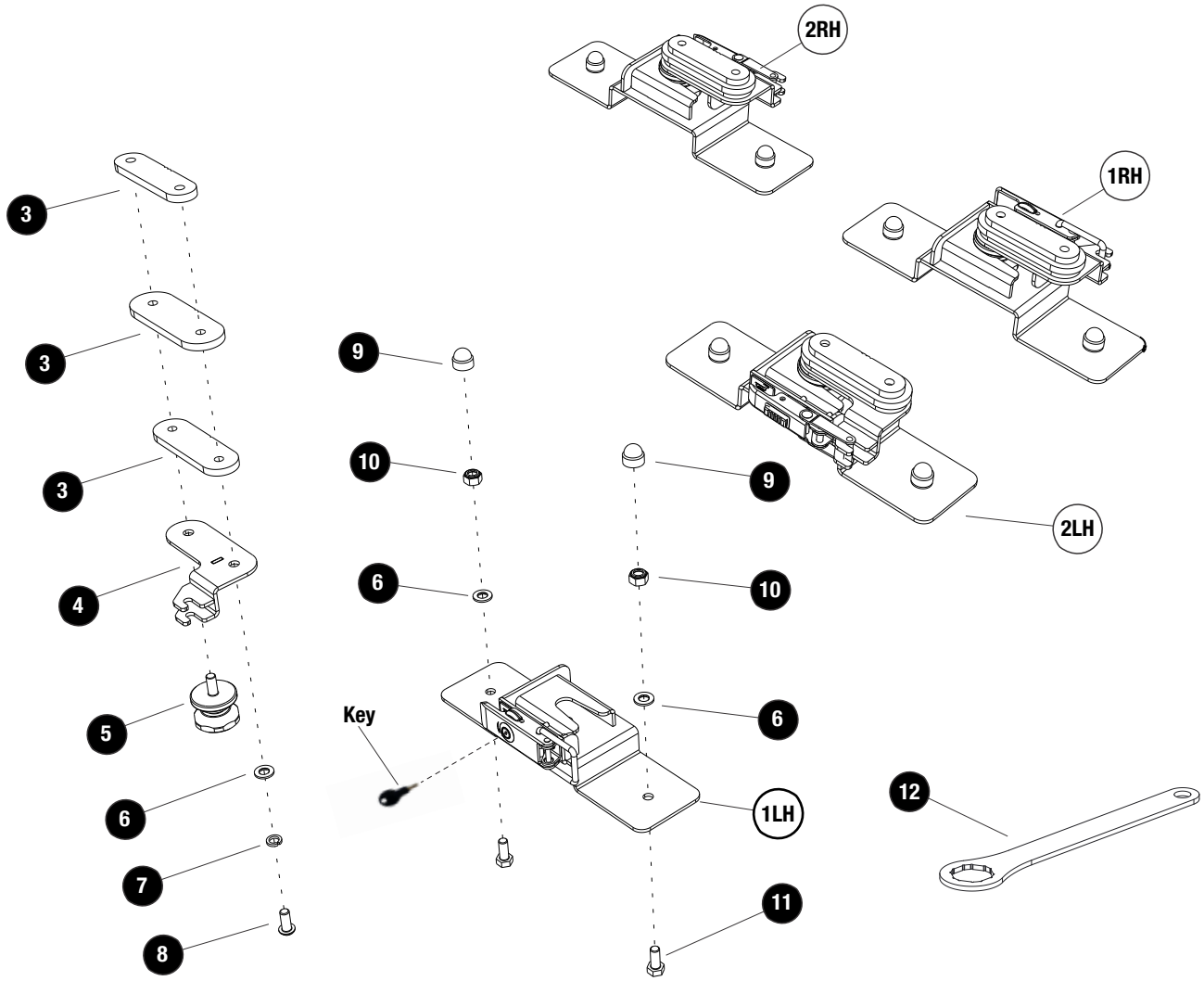

 © 2019 FRONT RUNNER VEHICLE OUTFITTERS

2 FIT AND SECURE

2.1

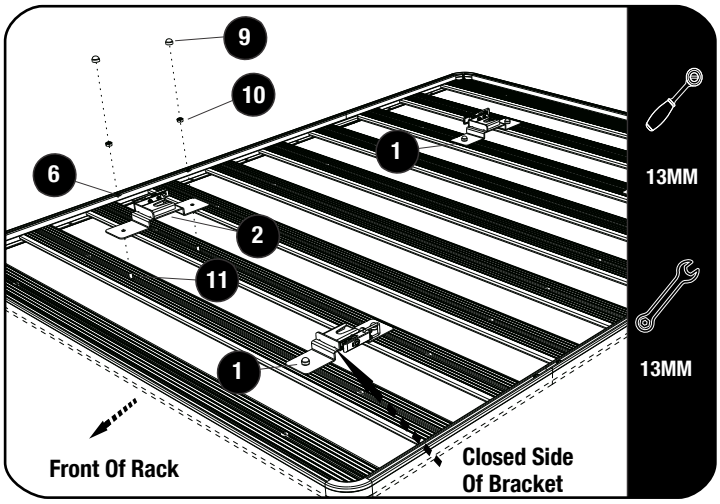

Taking into account the length and width of your tent, choose where you'd like to position it on the rack. This will determine where you will need to fit the Mount Brackets (Item 1 & 2).

Loosely fit the Mount Brackets (Item 1 & 2) to the rack using fasteners 6, 10 and 11. Note that position of the Mount Bracket With Lockable Latch (Item 1). Mount as shown in 2.1.

Make sure that the closed side of the Mount Brackets are facing toward the front of the rack and that they are parallel to the side of the rack.

2.2

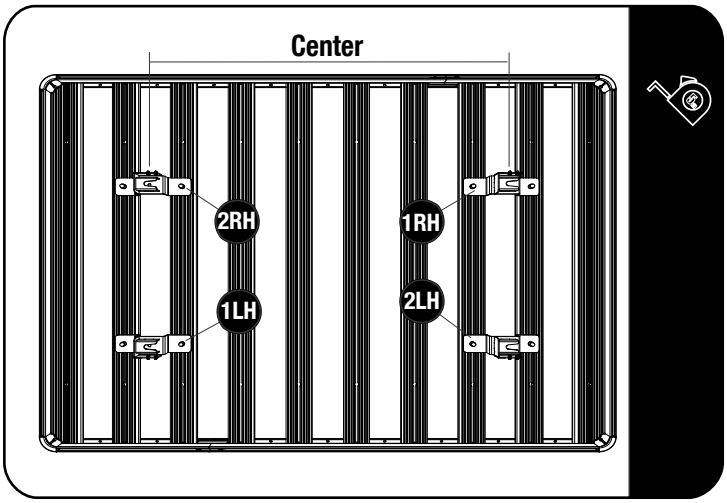

Measure the distance between the center points of the Rack Mount Brackets. You will need this measurement for fitting the Channel Feet (Item 5) in 2.6.

- 1LH Lockable Latch
- 1RH Lockable Latch
- 2LH Latch With Safety Catch
- 2LH Latch With Safety Catch

2.3

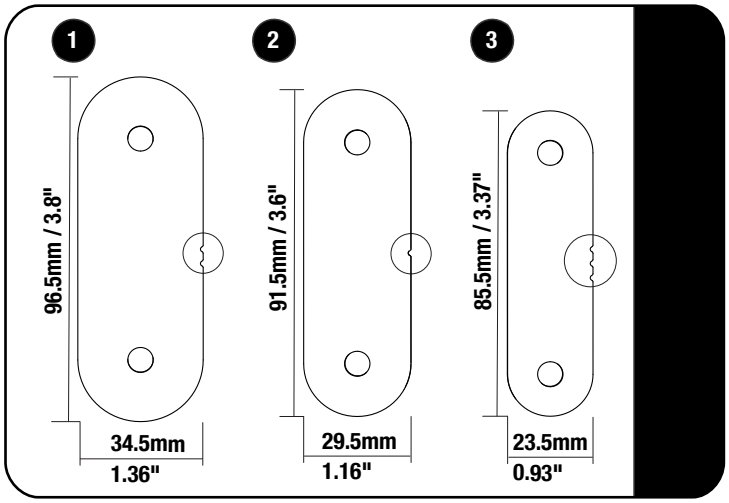

The Tent Channel Nut Plates included were designed for the following tents but will also work with other popular tent channels.

Check your mounting channel measurements for the appropriate size.

All Channel Nut Plates are 6mm thick.

1. Front Runner
2. Autohome
3. James Baroud

© 2019 FRONT RUNNER VEHICLE OUTFITTERS

2 FIT AND SECURE

2.4

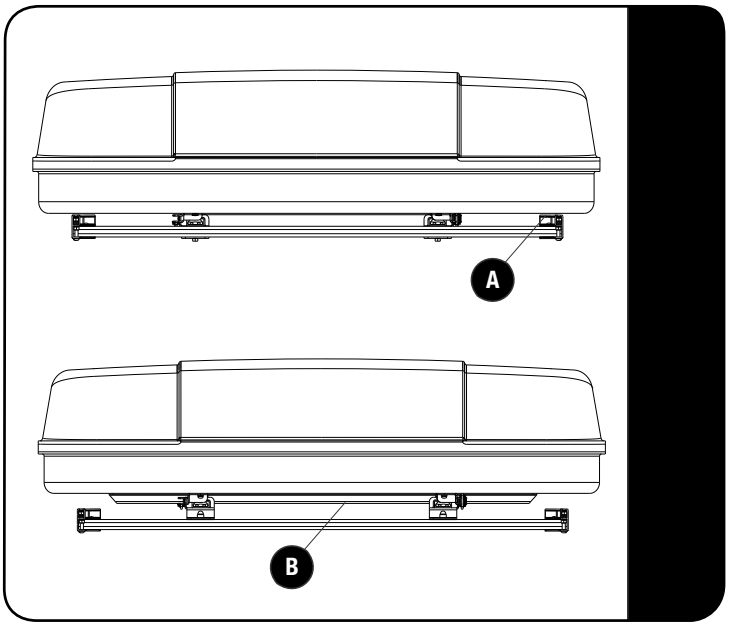

Hard shell tents may need additional support. If you are using these brackets with hard shell tents, such as James Baroud or Autohome, and you are unable to position the tent to rest directly on the rack side profiles (A), use TBMK009 – Hard Shell Tent Support Channels - by Front Runner (B) sold separately.

Depending on the tent manufacturer, your hard shell tent warranty may be voided if your tent becomes damaged and you did not provide proper lateral support for the hard shell tent.

2.5

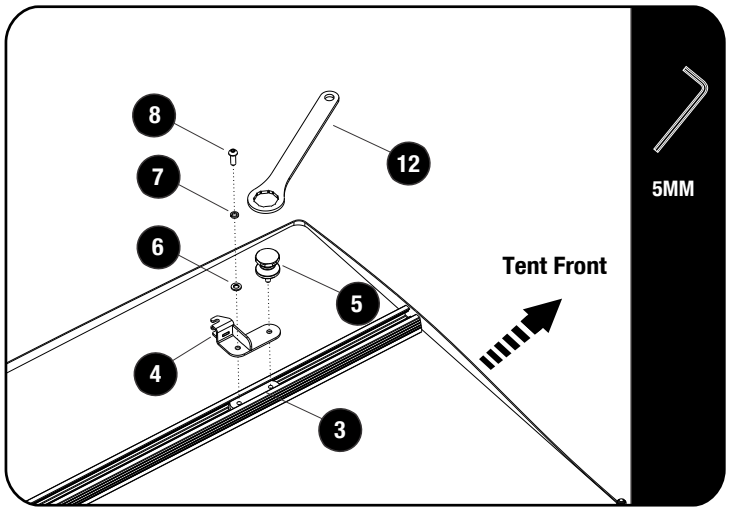

Flip your tent over to get to the mounting channels.

Loosely fit the Latch Brackets (Item 4) by sliding the chosen Channel Nut Plate (Item 3) into the mounting channel and fastening with (Items 5, 6, 7 and 8) as shown.

Make sure that the Channel Feet (Item 5) are facing toward the front of the rack as shown.

 © 2019 FRONT RUNNER VEHICLE OUTFITTERS

2 FIT AND SECURE

2.6

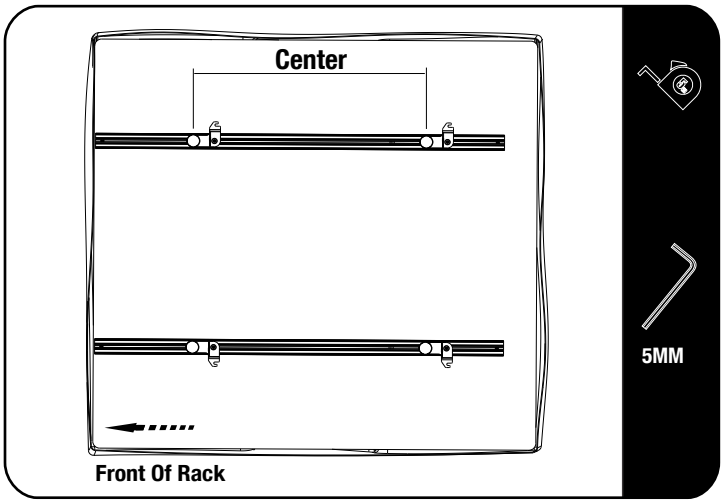

Measure the distance between the centers of Channel Feet to make sure it matches the position of the Rack Mount Brackets installed in 2.2.

Once measurements have been confirmed, fully tighten Channel Feet by using the supplied Wrench (Item 12). Also, fully tighten the M8x16 Button Head Screws.

2.7

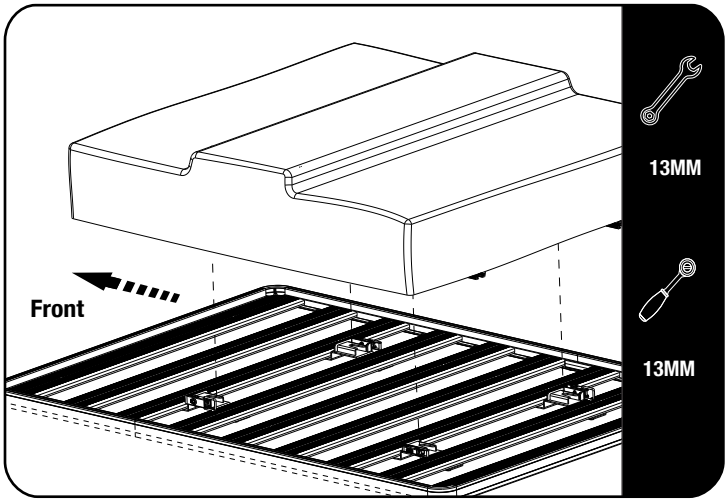

Flip the tent over and lower it onto the rack making sure the Channel Feet align with the rack mount brackets.

Push the tent forward so that the Channel Feet slide fully into the Rack Mount Brackets.

2.8

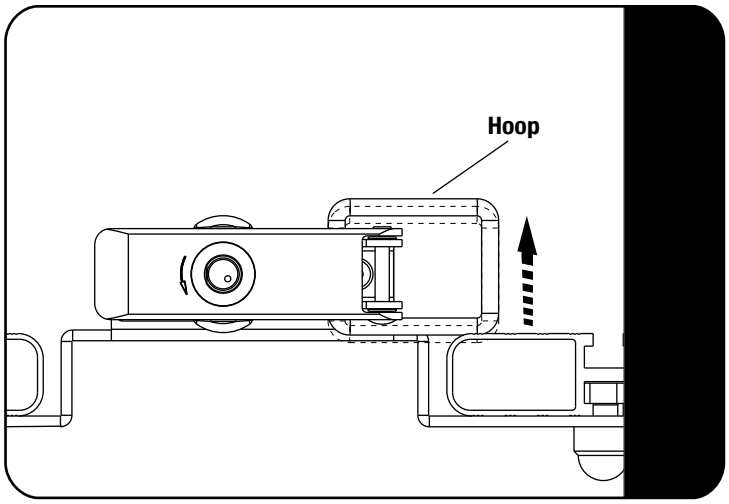

If you decide to fit the brackets under the Rack to have your tent sit lower, the hoop on the two lockable latches need to be lifted slightly to clear the slat while latching, as they have more play than the other two latches.

© 2019 FRONT RUNNER VEHICLE OUTFITTERS

3

FINISH

Congratulations! You did it. Take a step back and admire your work!

4

INSTALL OTHER VEHICLE AND RACK ACCESSORIES

Now's the time to visit your favorite Front Runner Dealer in person or online.

Be sure to tag us. We love to see our gear in action! #FrontRunnerOutfitters #BornToRoam

Share your adventures on:

© 2019 FRONT RUNNER VEHICLE OUTFITTERS