FRONT RUNNER
VEHICLE OUTFITTERS

BRACKETS FOR LARGE PICK-UP DECK COMPLETION SET

ENG

SSWS004

60 min

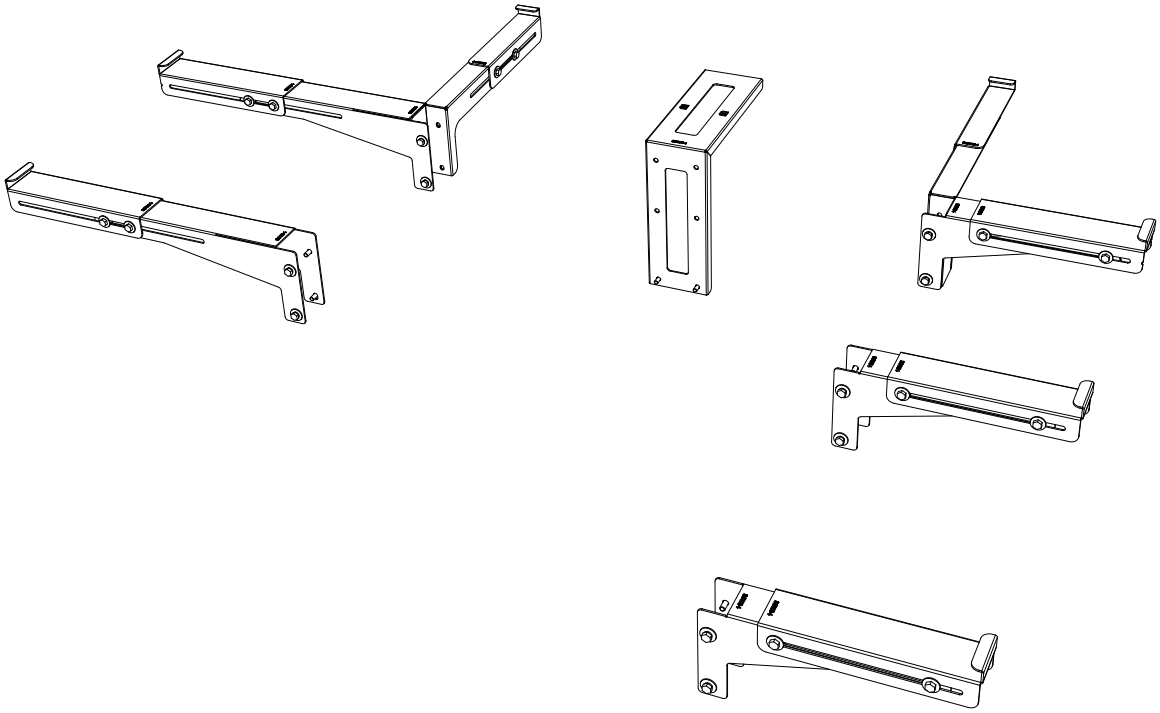

Thank you for purchasing Front Runner Brackets for Large Pick-Up Deck Completion Set.

Before you start, take a moment to familiarize yourself with this Fitting Intruction and the components received.

Refer to Page 2 for a list of all the components, quantities and tools required.

IMPORTANT WARNING! ⚠

IT IS CRITICAL THAT ALL FRONT RUNNER PRODUCTS BE PROPERLY AND SECURELY ASSEMBLED AND ATTACHED TO YOUR VEHICLE.

IMPROPER ATTACHMENT COULD RESULT IN AN AUTOMOBILE ACCIDENT, AND COULD CAUSE SERIOUS BODILY INJURY OR DEATH.

YOU ARE RESPONSIBLE FOR ASSEMBLING AND SECURING ALL FRONT RUNNER PRODUCTS TO YOUR VEHICLE. CHECKING THE ATTACHMENTS PRIOR TO USE, AND PERIODICALLY INSPECTING THE PRODUCTS FOR ADJUSTMENT, WEAR AND DAMAGE.

THEREFORE YOU MUST READ AND UNDERSTAND ALL OF THE INSTRUCTIONS AND PRECAUTIONS SUPPLIED WITH YOUR FRONT RUNNER PRODUCT PRIOR TO INSTALLATION OR USE.

IF YOU DO NOT UNDERSTAND ALL OF THE INSTRUCTIONS AND CAUTIONS, OR IF YOU HAVE NO MECHANICAL EXPERIENCE AND ARE NOT THOROUGHLY FAMILIAR WITH THE INSTALLATION PROCEDURES,

YOU SHOULD HAVE THE PRODUCT INSTALLED BY A PROFESSIONAL INSTALLER OR OTHER QUALIFIED PERSONNEL.

© COPYRIGHT 2016 FRONT RUNNER VEHICLE OUTFITTERS

1 GET ORGANIZED

Here is what you are looking at for SSWS004

IN THE BOX

1	1 X	Side Wing Fixed - Long
2	1 X	Side Wing Fixed - Long & Wide
3	2 X	Rear Wing Fixed - 1LH & 1RH
4	1 X	Rear Wing Middle Stiffener
5	1 X	Side Wing Fixed - Short & Wide
6	2 X	Side Wing Fixed - Short & Narrow
7	3 X	Side Wing Slide - Narrow
8	2 X	Side Wing Slide - Wide
9	2 X	Rear Wing Slide - 1LH & 1RH
10	44 X	M6x16 Hex Bolt
11	20 X	M6 Spring Washer
12	68 X	M6x19x1ss Flat Washer
13	24 X	M6 Nyloc
14	2 X	M6 Cage Nut

TOOLS NEEDED

10MM

10MM

FIGURE 1.1

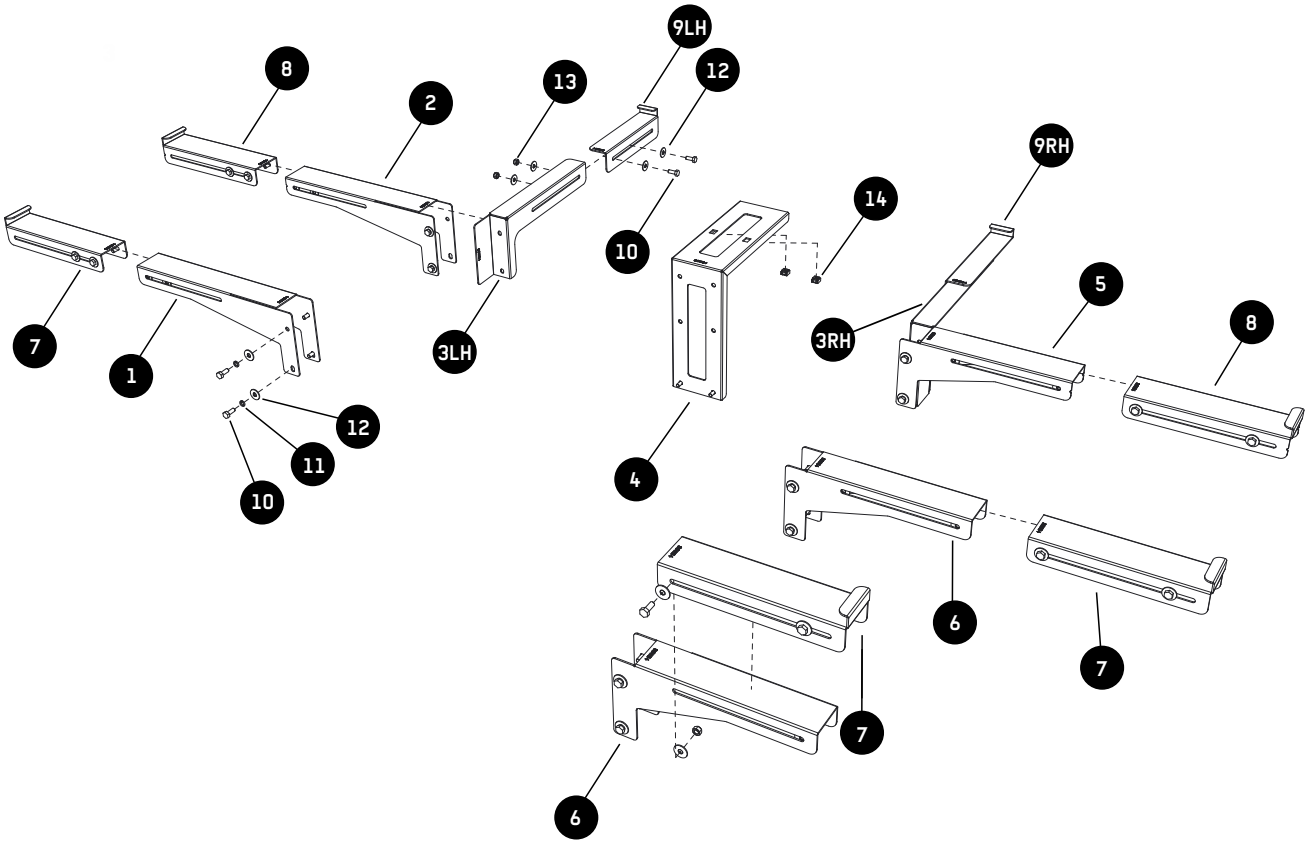

 © COPYRIGHT 2016 FRONT RUNNER VEHICLE OUTFITTERS

2 PREPARATION

2.1

ASSEMBLY OF 2 & 5 (REFER TO 3.1 FOR PLACEMENT)

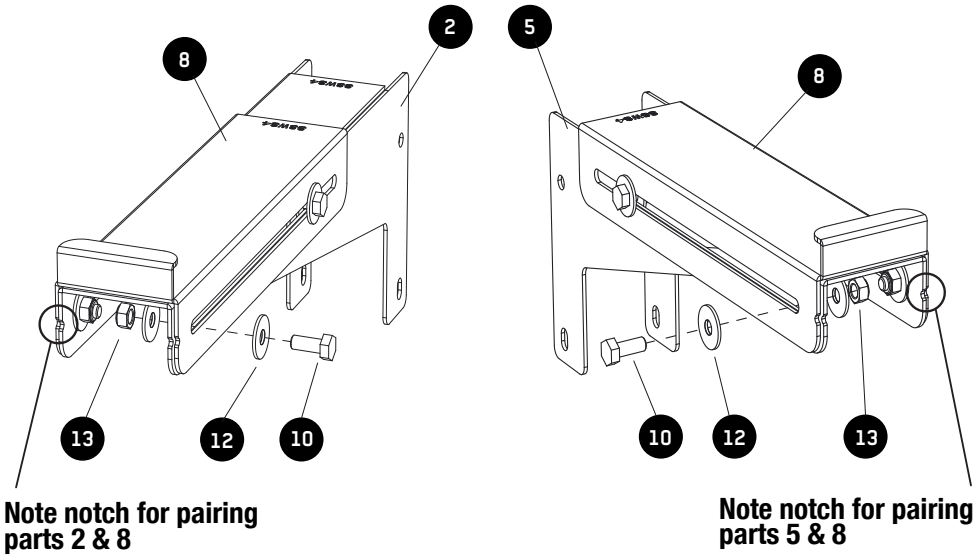

2.2

ASSEMBLY OF 1 & 6 (REFER TO 3.1 FOR PLACEMENT)

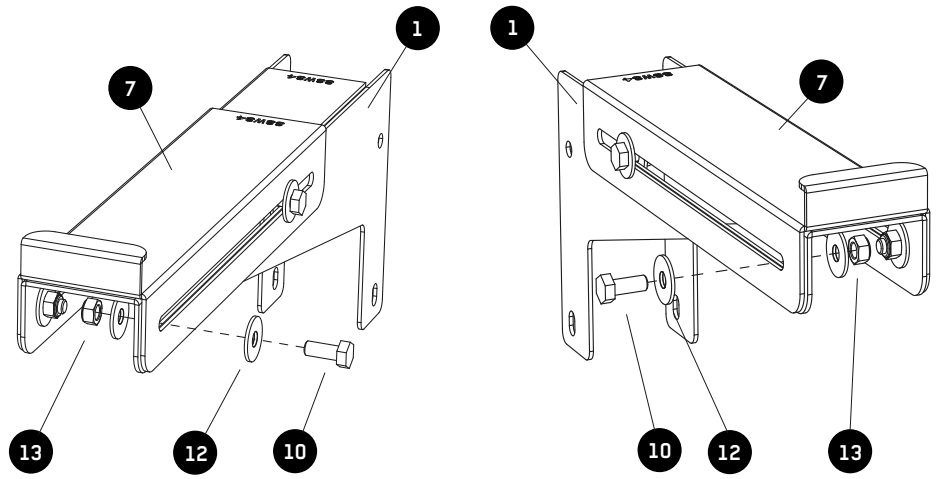

© COPYRIGHT 2016 FRONT RUNNER VEHICLE OUTFITTERS

2 FIT AND SECURE

2.3

ASSEMBLY OF 3LH, 3RH & 4 (REFER TO 3.1 FOR PLACEMENT)

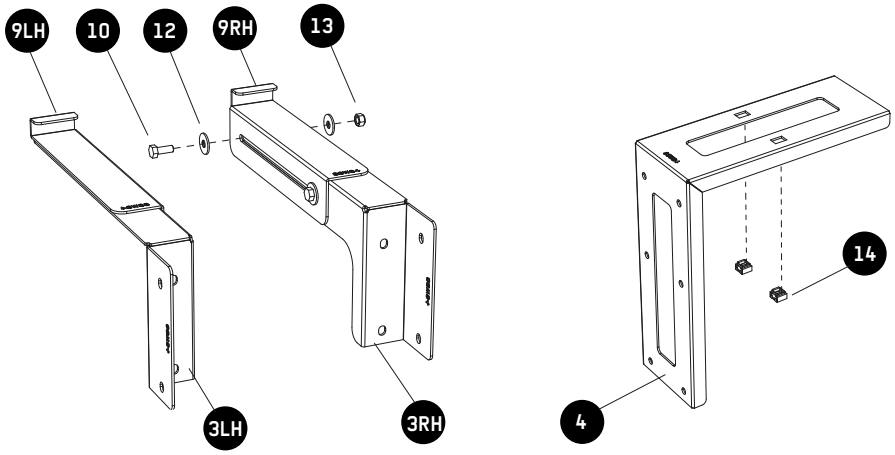

3 FIT AND SECURE

3.1

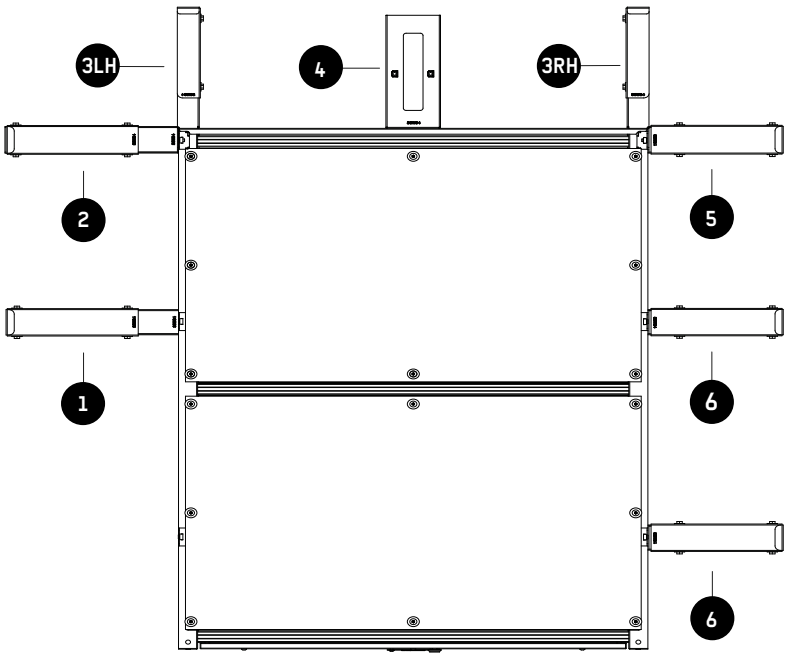

 © COPYRIGHT 2016 FRONT RUNNER VEHICLE OUTFITTERS

3 FIT AND SECURE

3.2

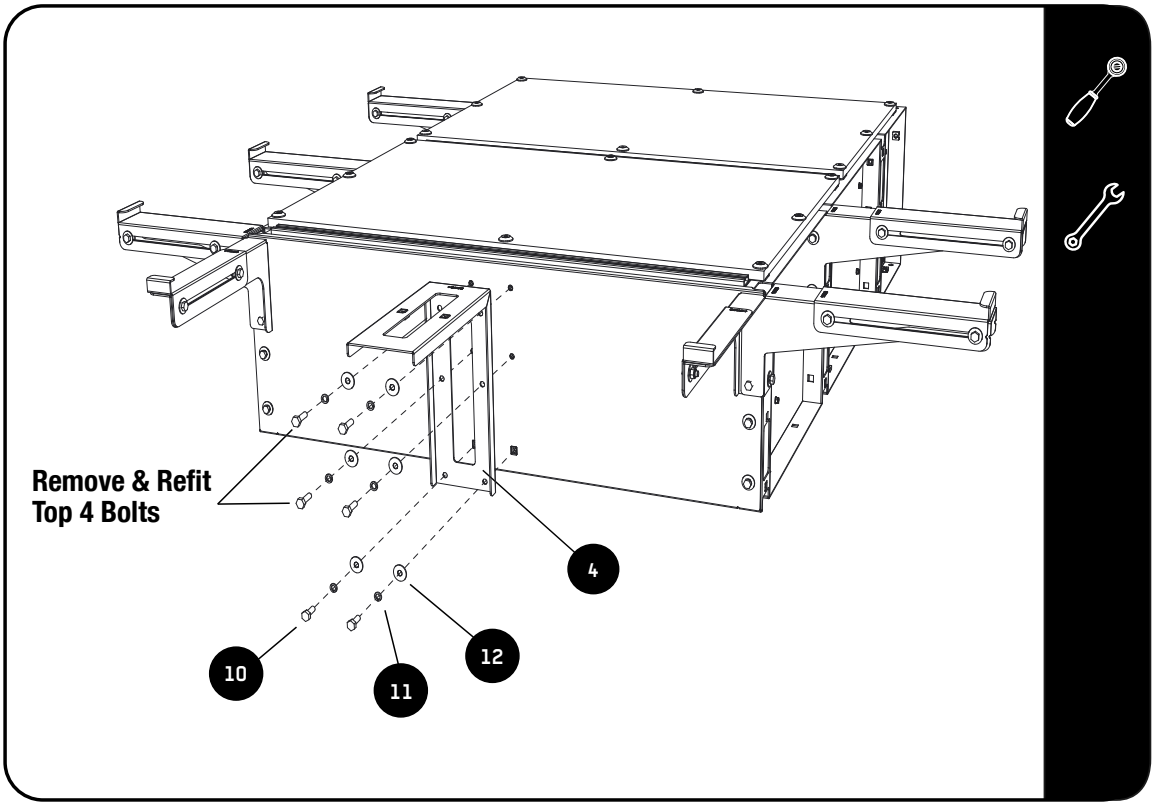

3.3

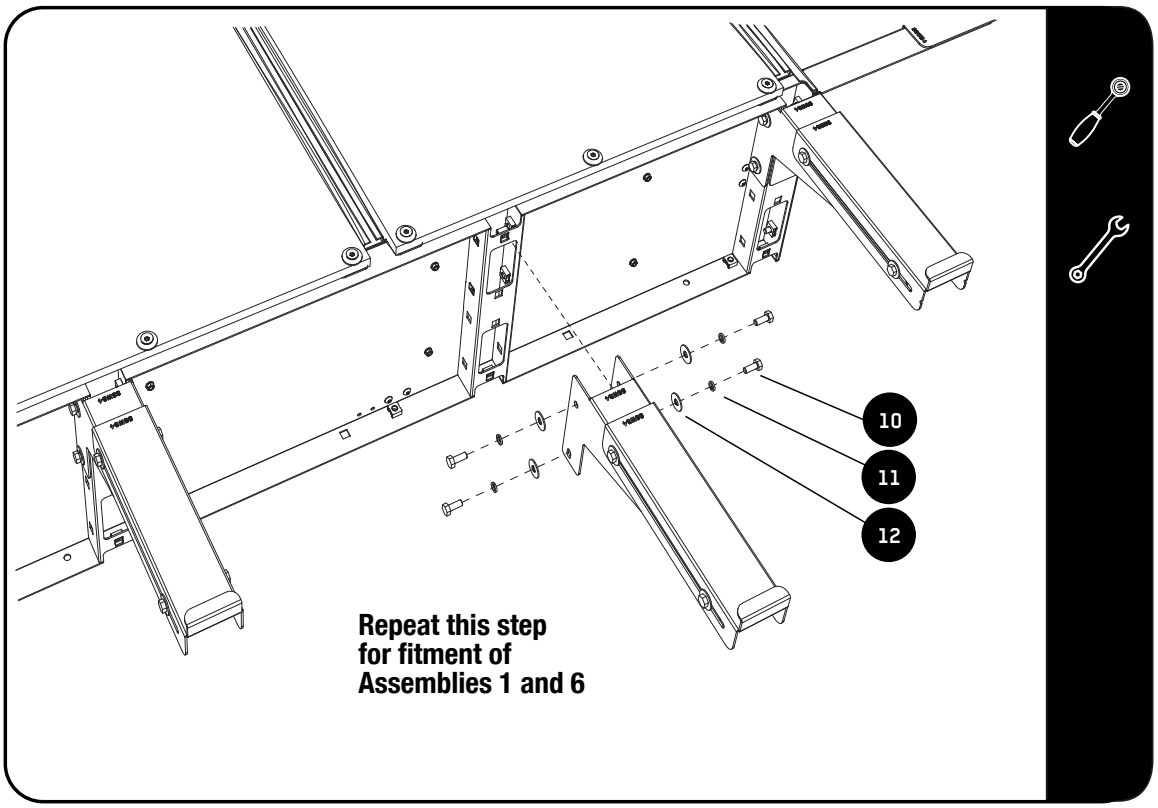

 © COPYRIGHT 2016 FRONT RUNNER VEHICLE OUTFITTERS

3 FIT AND SECURE

3.4

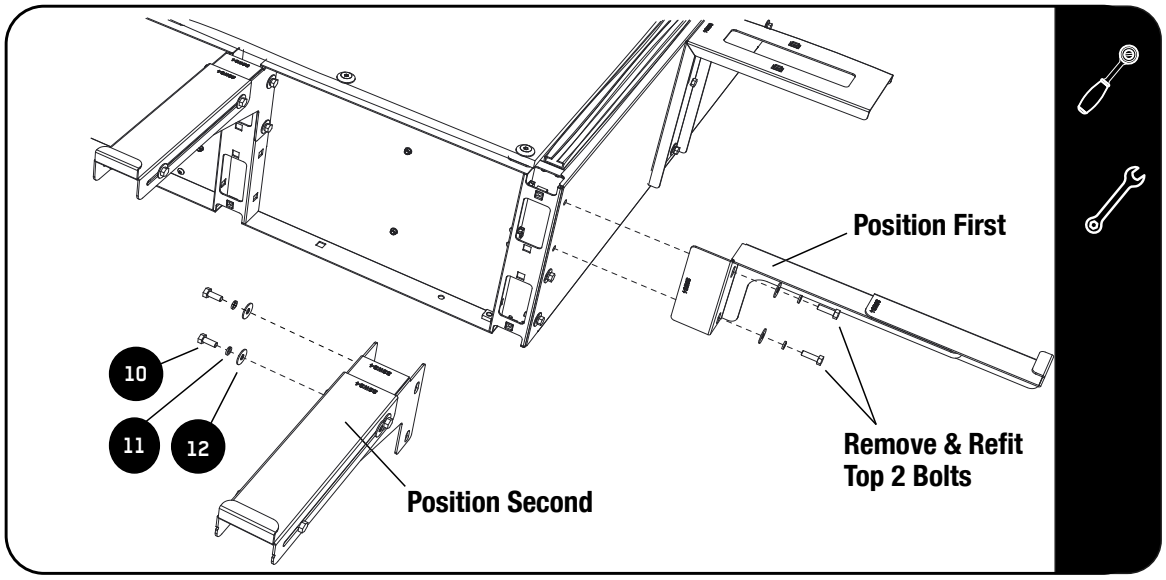

4 COMPLETION

4.1

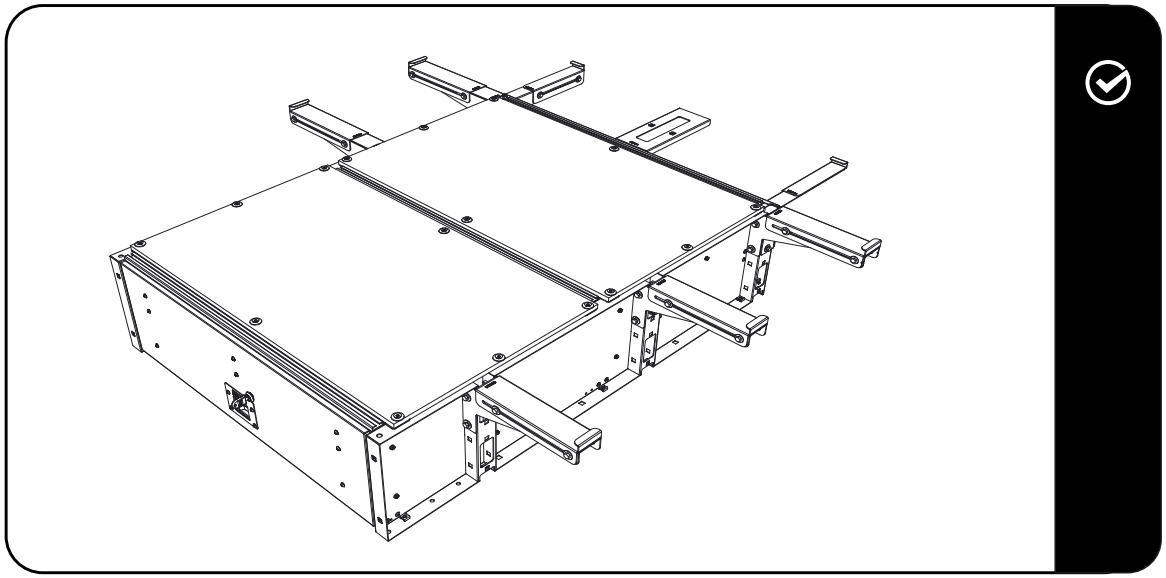

Congratulations you have completed your installation, take a step back and admire your work.

5 INSTALL OTHER VEHICLE AND RACK ACCESSORIES

Now's the time to visit your favorite Front Runner Dealer in person or online.

© COPYRIGHT 2016 FRONT RUNNER VEHICLE OUTFITTERS