FRONT RUNNER LAND ROVER DEFENDER TDI/TD5/PUMA DRAWER

ENG

SSLD009

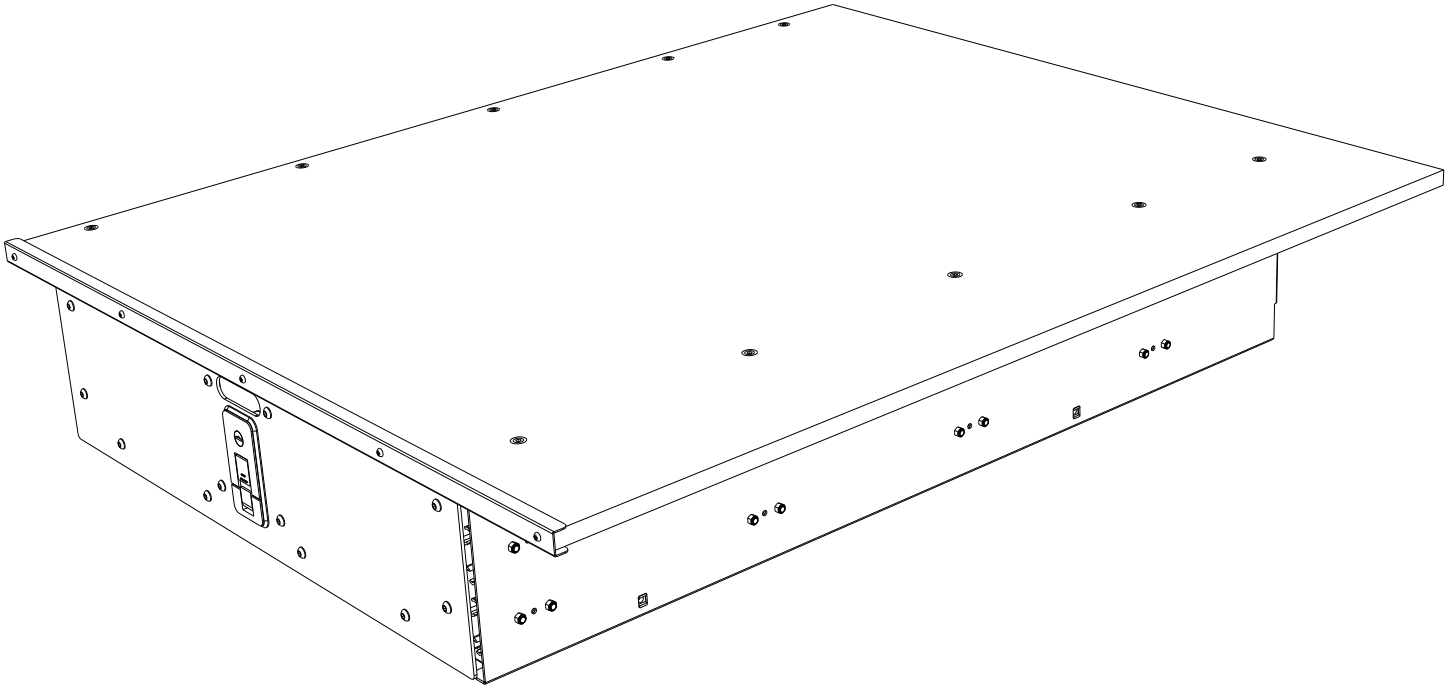

READ ME !

Thank you for purchasing a Front Runner Land Rover Defender TDI / TD5 / Puma Drawer.

Before you start, take a moment to familiarize yourself with the Fitting Instructions and the included components.

Refer to Page 2 for a list of all the components, quantities and tools required.

IMPORTANT WARNING!

IT IS CRITICAL THAT ALL FRONT RUNNER PRODUCTS BE PROPERLY AND SECURELY ASSEMBLED AND ATTACHED TO YOUR VEHICLE. IMPROPER ATTACHMENT COULD RESULT IN AN AUTOMOBILE ACCIDENT, AND COULD CAUSE SERIOUS BODILY INJURY OR DEATH. YOU ARE RESPONSIBLE FOR ASSEMBLING AND SECURING ALL FRONT RUNNER PRODUCTS TO YOUR VEHICLE, CHECKING THE ATTACHMENTS PRIOR TO USE, AND PERIODICALLY INSPECTING THE PRODUCTS FOR ADJUSTMENT, WEAR AND DAMAGE. THEREFORE, YOU MUST READ AND UNDERSTAND ALL OF THE INSTRUCTIONS AND PRECAUTIONS SUPPLIED WITH YOUR FRONT RUNNER PRODUCT PRIOR TO INSTALLATION OR USE. IF YOU DO NOT UNDERSTAND ALL OF THE INSTRUCTIONS AND CAUTIONS, OR IF YOU HAVE NO MECHANICAL EXPERIENCE AND ARE NOT THOROUGHLY FAMILIAR WITH THE INSTALLATION PROCEDURES, YOU SHOULD HAVE THE PRODUCT INSTALLED BY A PROFESSIONAL INSTALLER OR OTHER QUALIFIED PERSONNEL.

NOTE: Front Runner will not be responsible for any damage caused by the failure to install the product according to these instructions.

Please call us if you have any questions about the installation of this product.

 © 2022 FRONT RUNNER VEHICLE OUTFITTERS

1 GET ORGANIZED

IN THE BOX

1	1 X	Drawer System
2	4 X	M10 Flat Washer
3	12 X	M8 x 19 x 3 Flat Washer
4	4 X	M6 Clinch Nut
5	4 X	M6 x 25 Countersunk Screw

TOOLS NEEDED

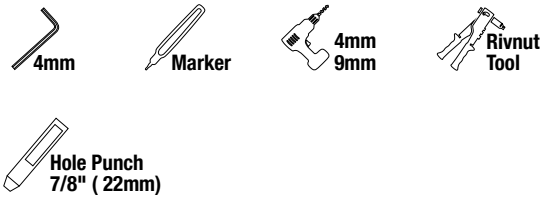

FIGURE 1.1

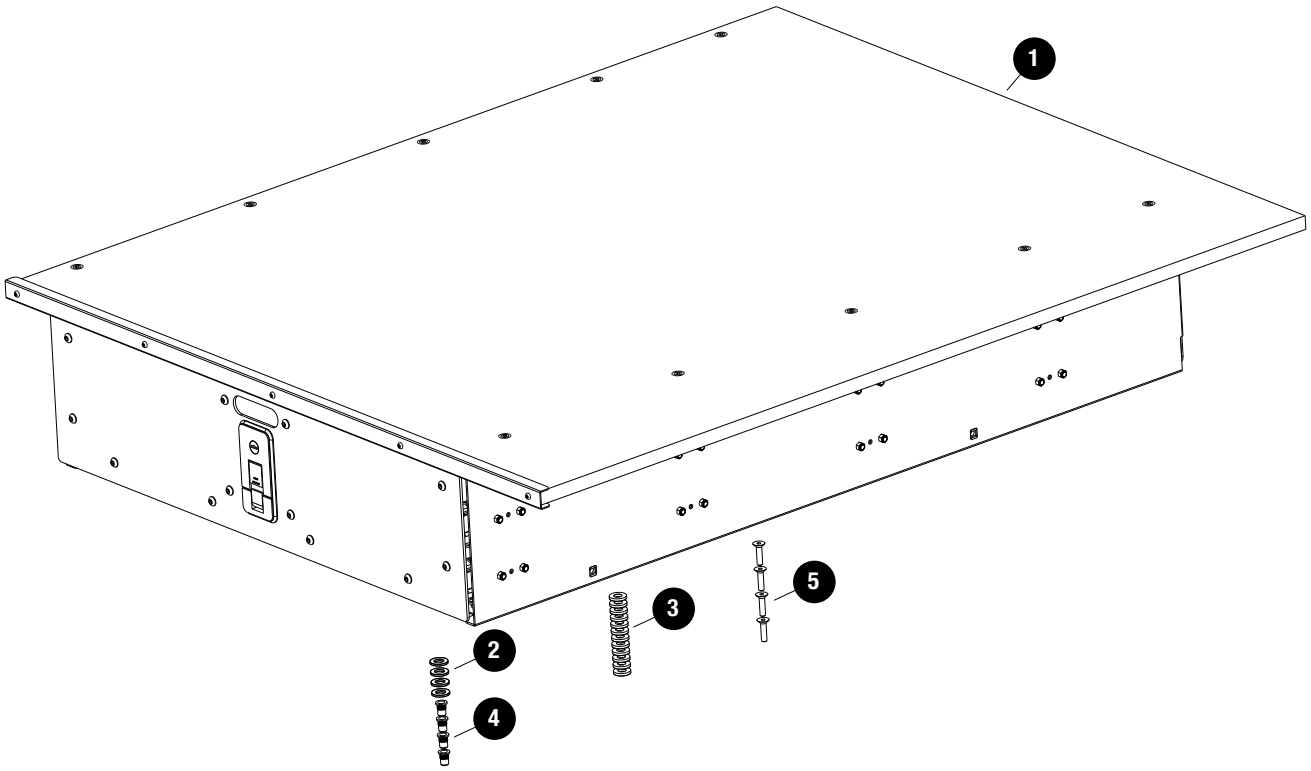

 © 2022 FRONT RUNNER VEHICLE OUTFITTERS

2 FIT AND SECURE

2.1

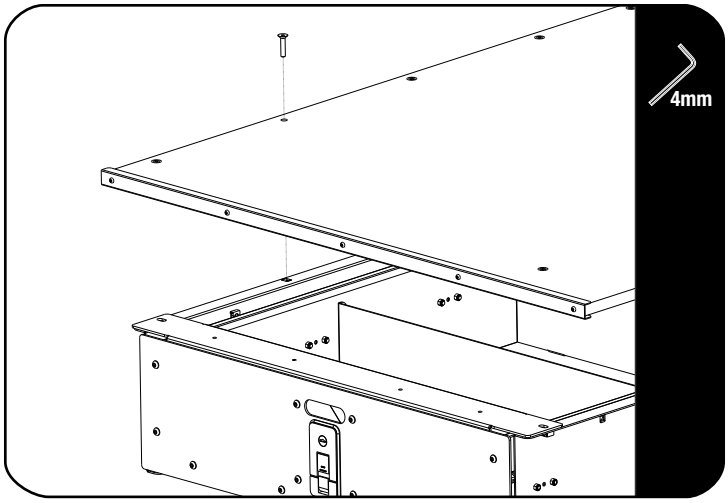

To install your Drawer System you will need to remove the Jump Seats from your vehicle.

With the seats removed, remove the deck from the Drawer System. To do this unscrew the ten M6 Countersunk Cap Screws from the deck.

Store the Screws in a safe place as you will refit the deck later.

2.2

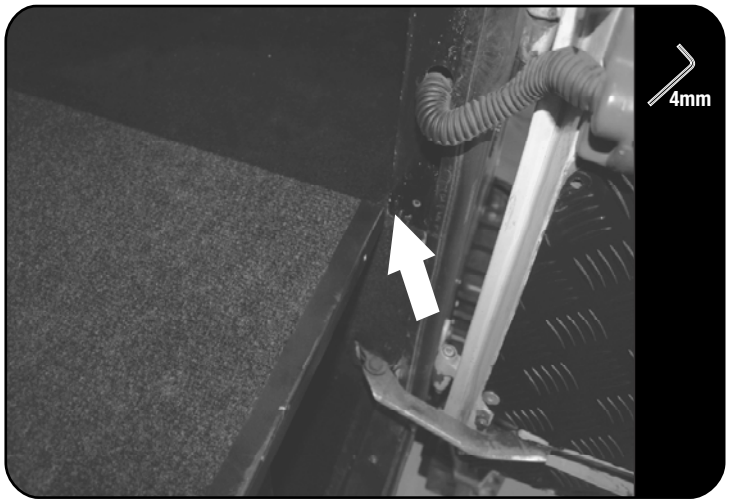

Carefully place the Drawer System into the vehicle. Replace the deck back on to the Drawer making sure that the Deck fits between the left and right hand wheel arches. Position the Drawer underneath the Deck so that the holes in the Deck line up with the screw holes in the Drawer. Loosely screw two of the countersunk cap srews - previously removed in Step 2.1 - into the first 2 holes in the front of the deck. Position the Drawer System so that the Deck lines up with the inside edge of the door jam, as shown.

2.3

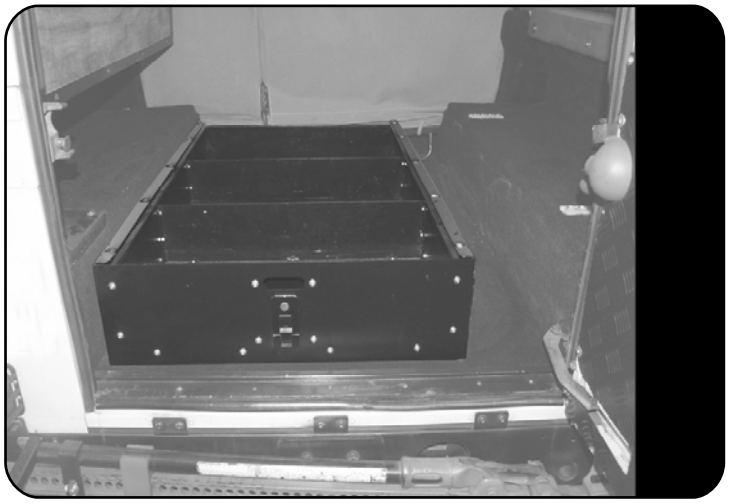

Remove the Deck again, taking care not to move the Drawer.

© 2022 FRONT RUNNER VEHICLE OUTFITTERS

2 FIT AND SECURE

2.4

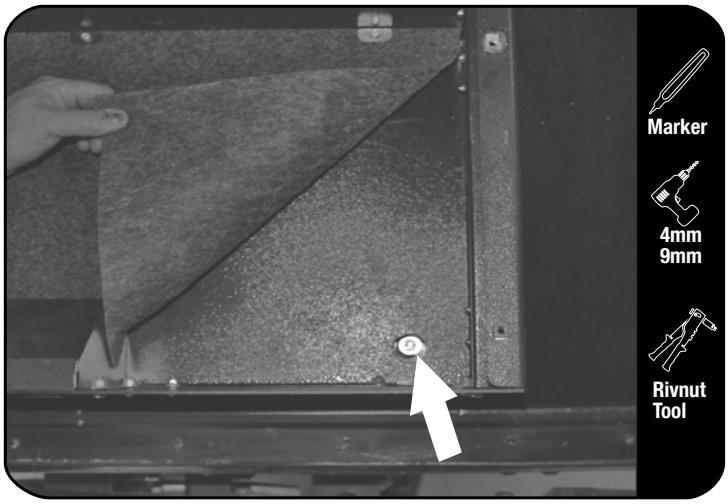

Using the Drawer as a template, mark out the bottom four bolt holes with a white marker.

For the front two holes lift the carpet slightly. There is a hole in both corners of the Drawer base.

For the rear two holes, unlatch the Drawer and open it partially. It is easier to mark these two holes by leaning over the back seat from the inside of the vehicle.

Remove the Drawer from the vehicle exposing the marks you have just made.

Keeping the markings in mind, look below the vehicle for any obstructions.

Drill 4mm pilot holes through the carpet and the floor of the vehicle. Lift up the carpet and open up the holes with a 9mm drill bit. Punch four holes in the carpet where you have justd drilled, with a 20mm hole punch. Lay the carpet back down and insert the Rivnuts (Item 5) into the holes in the body and crimp firmly with a rivnut tool.

2.5

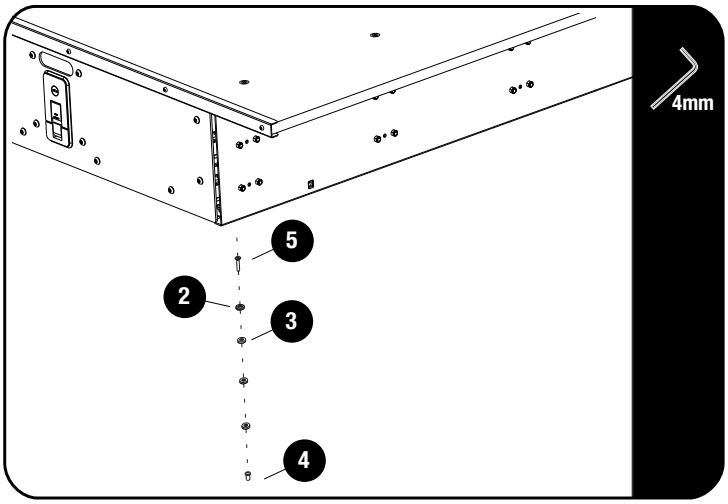

Stack three M8 x 19 x 3 Flat Washers (Item 3) on top of the Rivnuts to compensate for the carpet thickness. Carfully place the Drawer System on top of the stacked washers. Fasten the Drawer System in place using M6 x 25 Countersunk Cup Screws and M10 Flat Washers (Item 2 & 5).

Finally fit the Deck back onto the Drawer with the ten Countersunk Cap Screws.

© 2022 FRONT RUNNER VEHICLE OUTFITTERS

3 FINISH

Congratulations! You did it. Take a step back and admire your work!

4 INSTALL OTHER VEHICLE AND RACK ACCESSORIES

Now's the time to visit your favorite Front Runner Dealer in person or online.

Be sure to tag us. We love to see our gear in action! #FrontRunnerOutfitters #BornToRoam

Share your adventures on:

© 2022 FRONT RUNNER VEHICLE OUTFITTERS