FRONT RUNNER

LAND ROVER DEFENDER 2.4 DRAWER KIT

ENG

SSLD001

INSTALL TIME: 45 mins

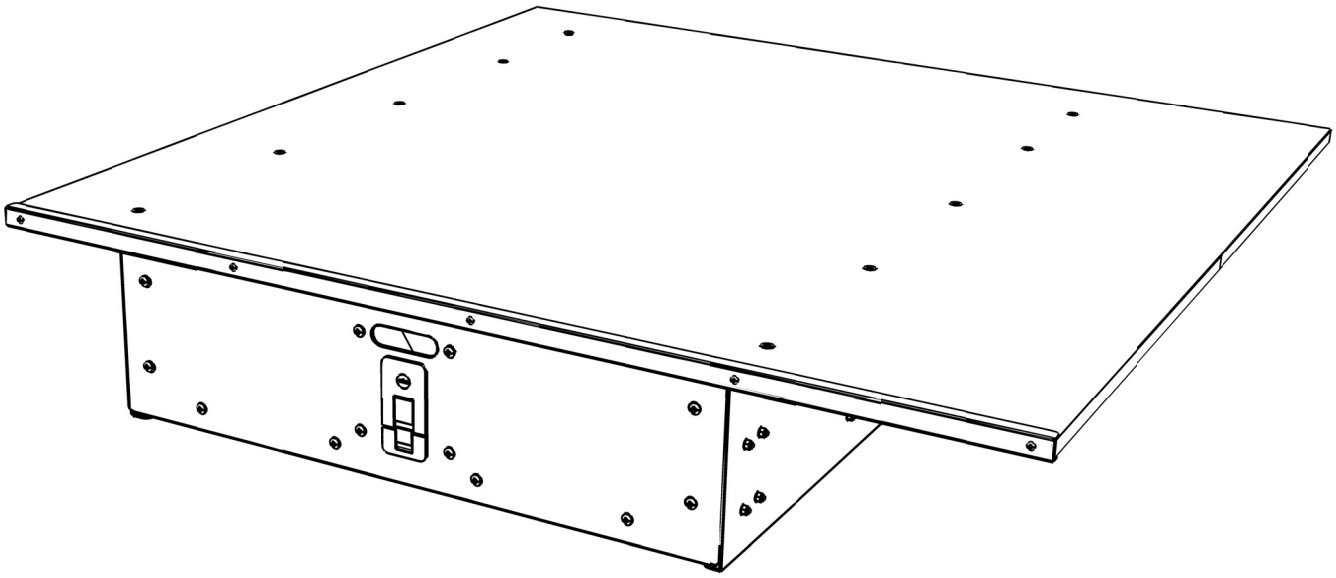

IMPORTANT WARNING!

IT IS CRITICAL THAT ALL FRONT RUNNER PRODUCTS BE PROPERLY AND SECURELY ASSEMBLED AND ATTACHED TO YOUR VEHICLE. IMPROPER ATTACHMENT COULD RESULT IN AN AUTOMOBILE ACCIDENT, AND COULD CAUSE SERIOUS BODILY INJURY OR DEATH TO YOU OR TO OTHERS. YOU ARE RESPONSIBLE FOR ASSEMBLING AND SECURING ALL FRONT RUNNER PRODUCTS TO YOUR VEHICLE, CHECKING THE ATTACHMENTS PRIOR TO USE, AND PERIODICALLY INSPECTING THE PRODUCTS FOR ADJUSTMENT, WEAR, AND DAMAGE. THEREFORE, YOU MUST READ AND UNDERSTAND ALL OF THE INSTRUCTIONS AND CAUTIONS SUPPLIED WITH YOUR FRONT RUNNER PRODUCT PRIOR TO INSTALLATION OR USE. IF YOU DO NOT UNDERSTAND ALL OF THE INSTRUCTIONS AND CAUTIONS, OR IF YOU HAVE NO MECHANICAL EXPERIENCE AND ARE NOT THOROUGHLY FAMILIAR WITH THE INSTALLATION PROCEDURES, YOU SHOULD HAVE THE PRODUCT INSTALLED BY A PROFESSIONAL INSTALLER OR OTHER QUALIFIED PERSONNEL.

© COPYRIGHT 2015 FRONT RUNNER VEHICLE OUTFITTERS

1 GET ORGANIZED...

Here is what you are looking at:

Item #	Quantity	Description
1	10	M6 Countersunk Cap Screw
2	1	Deck
3	4	M10 Flat Washer
4	12	M8x19x3 Flat washer
5	4	M6 Clinch Nut
6	4	M6 x 25 Countersunk Cap Screw
7	1	Drawer

You will need:

- 13 mm Flat or Socket Wrench
- 4 mm Hex Key
- 4mm & 9mm Drill Bits
- Drilling Machine
- 20mm Hole Punch
- Clinch Nut Tool

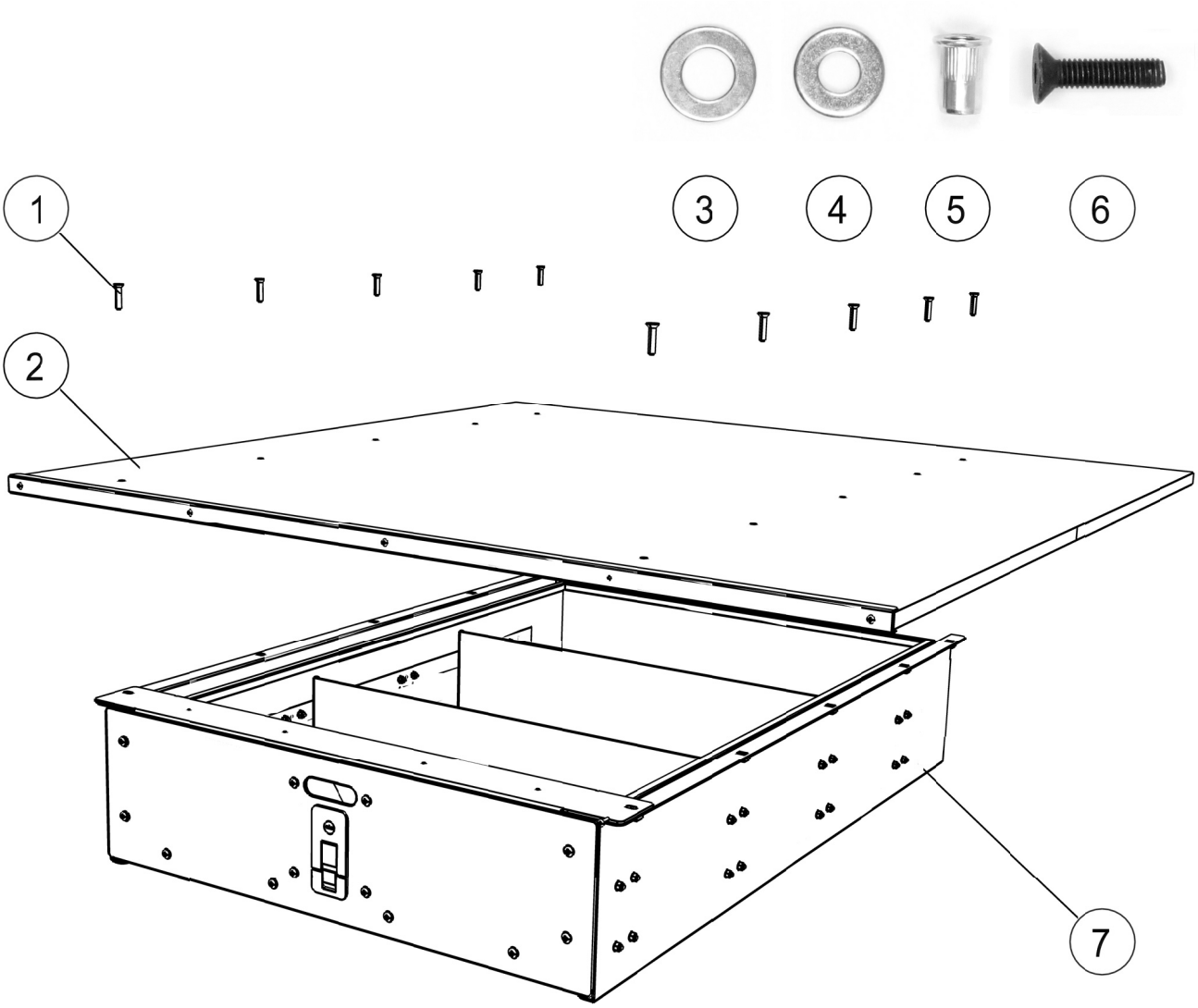

(A) **Familiarize yourself with the parts and then step away from the work area and read through these instructions from beginning to end. Take a moment as a little prep now may save you a lot of time later.**

© COPYRIGHT 2015 FRONT RUNNER VEHICLE OUTFITTERS

2 INSTALLING DRAWER SYSTEM

To install your Drawer System you will need to remove the Jump Seats form your vehicle first.

(A) **Now with the Jump Seats removed, Remove the Deck from the Drawer System. To do this unscrew the ten M6 Countersunk Cap Screw from the Deck with a 4mm Hex Key. As shown in the diagram to the right. Retain the Screws for reuse later.**

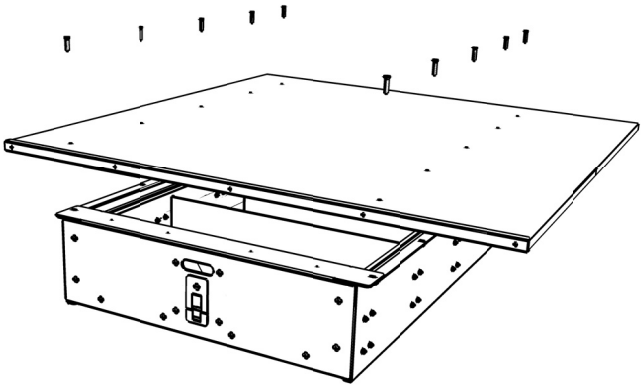

(B) **Carefully place the Drawer System into the vehicle and place the Deck back on to the Drawer making sure that the Deck fits between the left and right hand wheel arches. Position the Drawer underneath the Deck so that the Holes in the Deck line up with the Screw Holes in the Drawer. With the holes lined up, loosely screw two of the Counter Sunk Cap Screws previously removed in Step2A into the front two holes. Position the Drawer System so that the Deck lines up with the inside edge of the door jam, as indicated by the arrow in the picture.**

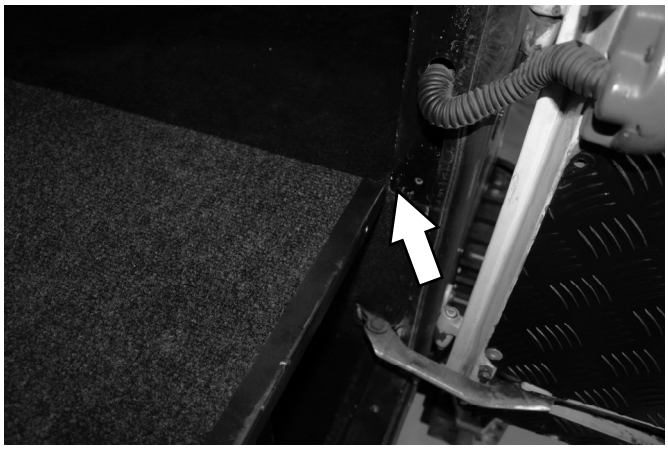

(C) **Remove the Deck again. Take care not to move the Drawer**

© COPYRIGHT 2015 FRONT RUNNER VEHICLE OUTFITTERS

2 INSTALLING DRAWER SYSTEM CONT...

(D) Using the drawer as a template, mark out the bottom four bolt holes with a white marker. For the front two holes lift the carpet slightly. There is a hole in either corner of the drawer base. (See picture to the right) For the rear two, unlatch the Drawer and open it out partially. It may be easier to mark these two holes by leaning over the rear seats from the inside of the vehicle.

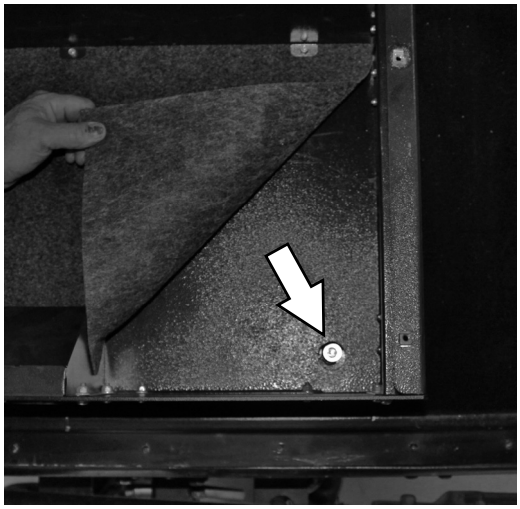

(E) Remove the Drawer from the vehicle exposing the marks you have just made.

Drill 4mm pilot holes through the carpet and the floor of the vehicle. Now lift up the Carpet and open up the Pilot Holes with a 9mm Drill Bit. Punch four holes in the carpet where you have just drilled the Pilot holes, with a 20mm Hole Punch. Lay the carpet back down and insert the Clinch Nuts (Item 5) into the holes in the body and crimp firmly.

(F) Stack three 19x3mm Fat Washers (Item 4) on top of the Clinch Nuts to compensate for the carpet thickness. Carefully place the Drawer System on top of the stacked Washers. Fasten the Drawer System in place with the M6x25 Countersunk Cup Screws and M10 Flat Washers (Item3 &6). Use a 4mm Hex Key to firmly fasten the four Cap Screws.

(G) Finally fit the Deck with the Ten Countersunk Cap Screws you removed in Step2A.

Congratulations, you have completed your installation. Take a step back and admire your work. Good Job!

© COPYRIGHT 2015 FRONT RUNNER VEHICLE OUTFITTERS