FRONT RUNNER

DRAWER DECK COMPLETION SET

LAND ROVER DISCOVERY LR3&4

ENG

SSDS901

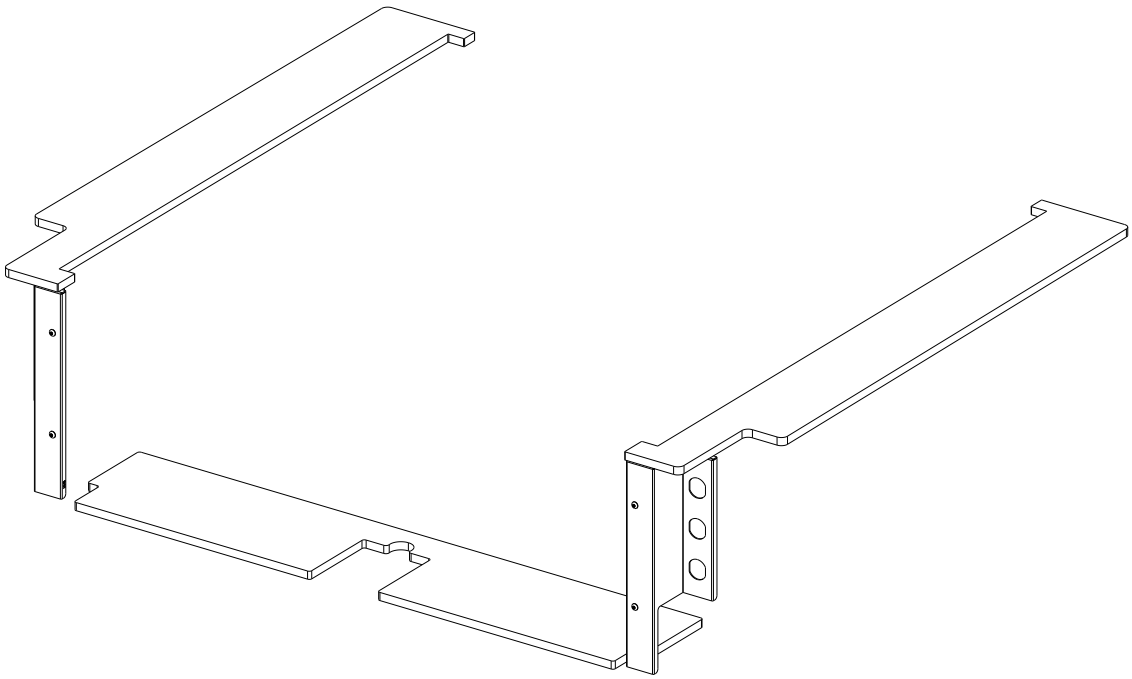

READ ME !

Thank you for purchasing a Front Runner Drawer Deck Completion Set.

Before you start, take a moment to familiarize yourself with the Fitting Instructions and the components received.

Refer to Page 2 for a list of all the components, quantities and tools required.

IMPORTANT WARNING!

IT IS CRITICAL THAT ALL FRONT RUNNER PRODUCTS BE PROPERLY AND SECURELY ASSEMBLED AND ATTACHED TO YOUR VEHICLE. IMPROPER ATTACHMENT COULD RESULT IN AN AUTOMOBILE ACCIDENT, AND COULD CAUSE SERIOUS BODILY INJURY OR DEATH. YOU ARE RESPONSIBLE FOR ASSEMBLING AND SECURING ALL FRONT RUNNER PRODUCTS TO YOUR VEHICLE, CHECKING THE ATTACHMENTS PRIOR TO USE, AND PERIODICALLY INSPECTING THE PRODUCTS FOR ADJUSTMENT, WEAR AND DAMAGE. THEREFORE, YOU MUST READ AND UNDERSTAND ALL OF THE INSTRUCTIONS AND PRECAUTIONS SUPPLIED WITH YOUR FRONT RUNNER PRODUCT PRIOR TO INSTALLATION OR USE. IF YOU DO NOT UNDERSTAND ALL OF THE INSTRUCTIONS AND CAUTIONS, OR IF YOU HAVE NO MECHANICAL EXPERIENCE AND ARE NOT THOROUGHLY FAMILIAR WITH THE INSTALLATION PROCEDURES, YOU SHOULD HAVE THE PRODUCT INSTALLED BY A PROFESSIONAL INSTALLER OR OTHER QUALIFIED PERSONNEL.

NOTE: Front Runner will not be responsible for any damage caused by the failure to install the product according to these instructions.

Please call us if you have any questions about the installation of this product.

 © 2019 FRONT RUNNER VEHICLE OUTFITTERS

1 GET ORGANIZED

IN THE BOX		
1	1 X	LH Side Deck
2	1 X	RH Side Deck
3	1 X	RH Front Face
4	1 X	Replacement Floor Board
5	1 X	RH Front Face (With Knockouts)
6	4 X	M5 Nyloc Nut
7	4 X	M5 Flat Washer
8	4 X	M5 x 12 Button Head Screw
9	1 X	LH Front Face
10	1 X	LH Front Face (With Knockouts)
11	1 X	T-Bar Wheel Winder
12	1 X	Wheel Winder Hex Socket
13	1 X	Wheel Winder 31mm Slot Socket

TOOLS NEEDED

A Drawer System SSDR002 (not included)

B Deck Side Skirt Support Brackets SSWS002 (not included)

FIGURE 1.1

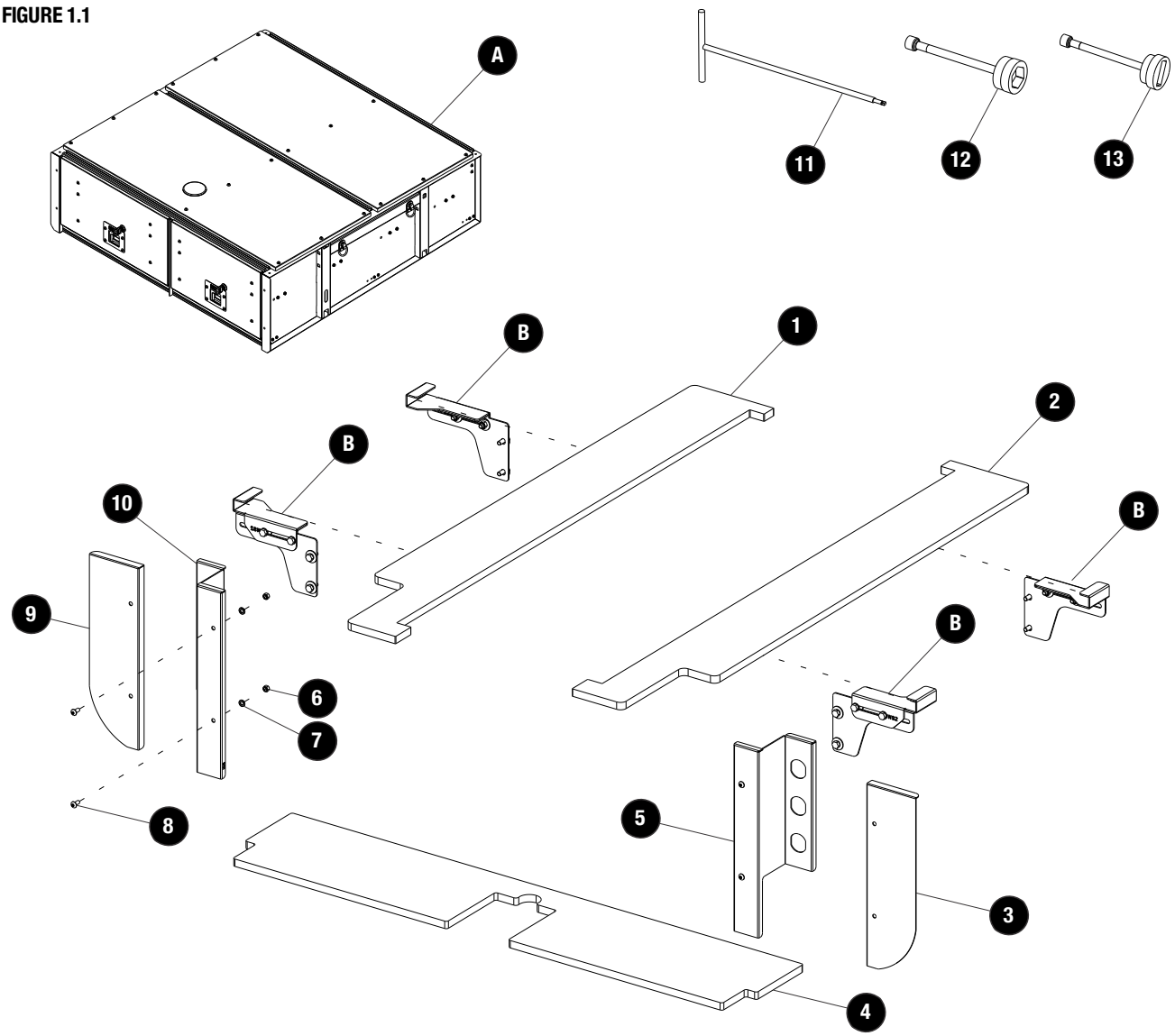

 © 2019 FRONT RUNNER VEHICLE OUTFITTERS

2 FIT AND SECURE

2.1

NOTE: Components to be used but not included.

Drawer System - SSDR002

Adjustable wing brackets - SSWS002

Remove the rubber boot floor mat.

If your vehicle came with a second row of rear seats, lift the left hand seat to expose the wheel winder mechanism. Remove the cap.

If your vehicle did not come with a second row of rear seats, remove the rear floor board to expose the wheel winder mechanism. Remove the cap.

2.2

In the center of the cap removed in 2.1, mark and cut a cross 20 mm x 20 mm in the cap. Push the cap over the appropriate Adapter Socket (Item 12 or 13) as shown.

Place the Adapter Socket over the wheel winder mechanism and slide the cap down the Adapter Socket's shaft and into position.

NOTE: The Adaptor Socket to be used is vehicle model dependant.

2.3

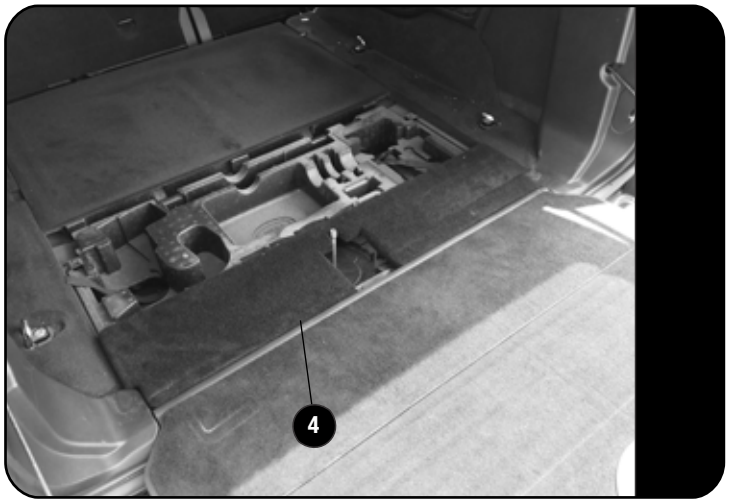

FITMENT WITHOUT SECOND ROW SEATS

Fit the Replacement Floor Board (Item 4) with the cut out in the center of the floor board facing towards the tailgate of the vehicle.

© 2019 FRONT RUNNER VEHICLE OUTFITTERS

2 FIT AND SECURE

2.4

FITMENT WITH SECOND ROW SEATS

Lower the left hand seat making sure that the Adapter Socket sits between the two seats as shown.

2.5

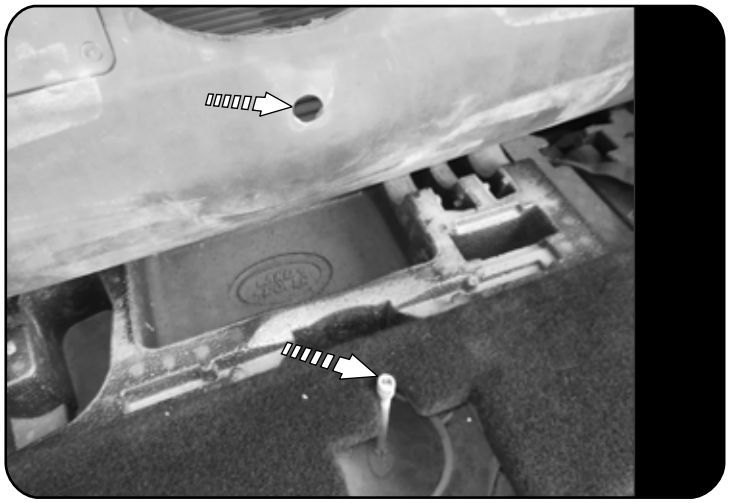

Replace the rubber boot floor mat removed. Determine the Adaptor Socket position and mark the position on the floor mat. Cut out the marked position. Insure the hole is big enough for the socket end to fit through it.

2.6

Place the Drawer System into the vehicle lining up the front of the Drawer System with the edge of the load bay area. There should be a slight gap between the Drawer System and the interior door flap when the flap is in the upright position.

Ensure that the Drawer System is centered left to right. Once satisfied with the positioning, secure the Drawer System to the vehicle using the Turn Buckles supplied with SSDR002 as shown. Tighten the securing nut on each Turn Buckle to lock it in place.

© 2019 FRONT RUNNER VEHICLE OUTFITTERS

2 FIT AND SECURE

2.7

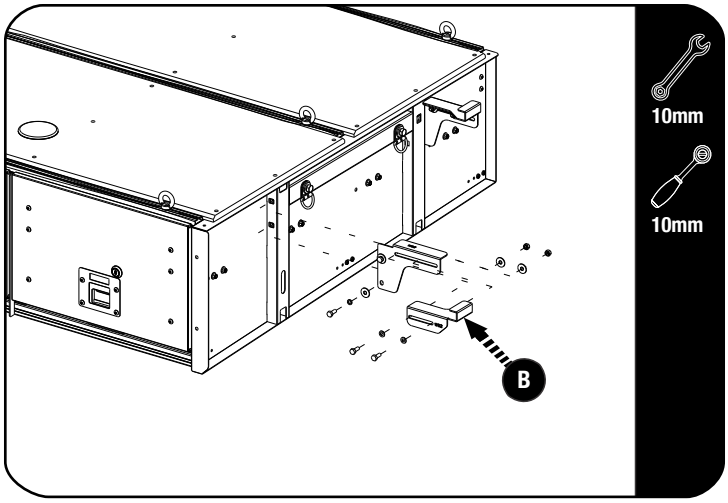

Fit the four Deck Wing Set Brackets (SSWS002) to the Drawer System.

B Do not fully tighten the Wing Set Brackets. Final adjustment and tightening to be done in 2.10.

2.8

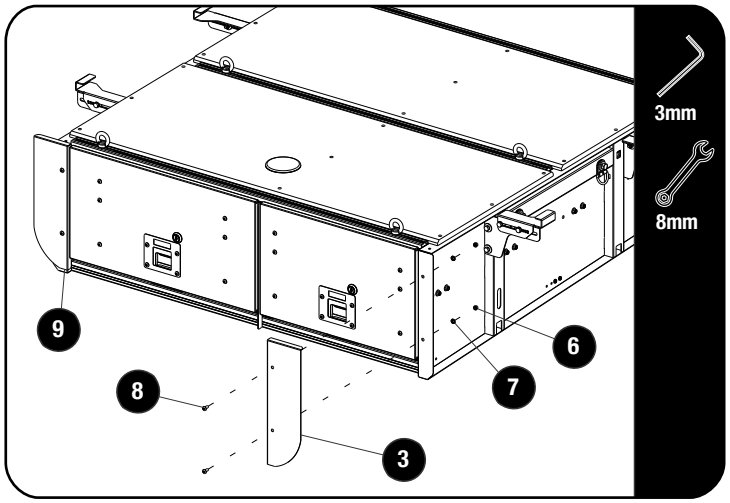

FITMENT WITHOUT ADDITIONAL GAUGES AND SOCKETS

Secure the LH Front Face (Item 9) And RH Front Face (Item 3) to the Drawer System using four M5x12 Button Head Screws, four M5 Flat Washers and four M5 Nyloc Nuts (Item 8, 7 & 6).

2.9

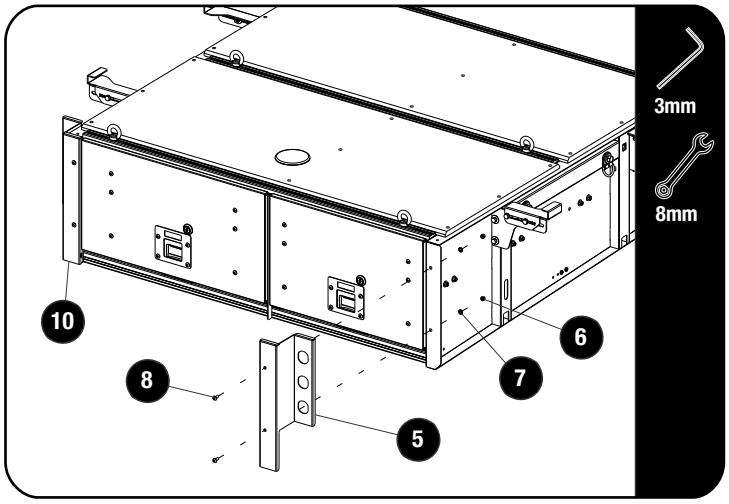

FITMENT WITH ADDITIONAL GAUGES AND SOCKETS

Secure the LH Front Face (Item 10) And RH Front Face (Item 5) to the Drawer System using four M5x12 Button Head Screws, four M5 Flat Washers and four M5 Nyloc Nuts (Item 8, 7 & 6).

© 2019 FRONT RUNNER VEHICLE OUTFITTERS

2 FIT AND SECURE

2.10

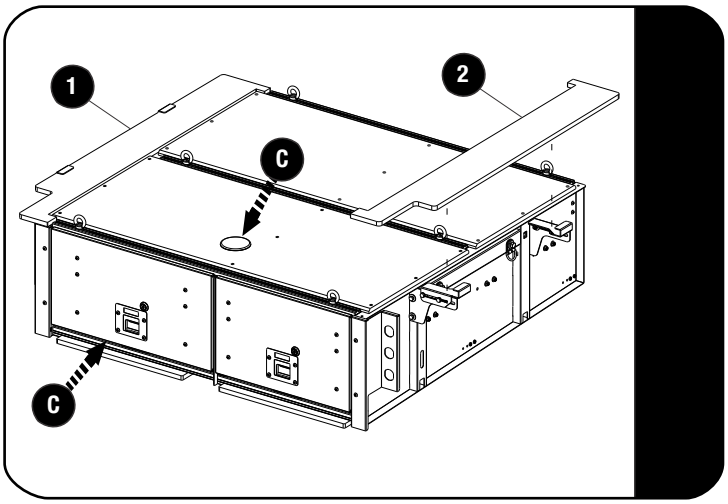

Slide the LH Side Deck (Item 1) and RH Side Deck (Item 2) in to the clamps and adjust the Wing Set Brackets. Carefully remove the Side Decks. Fully tighten the Wing Set Brackets.

Slide the LH Side Deck (Items 1) and the RH Side Deck (Item 2) into the clamps of the Wing Set Brackets. Push down to insure the Side Decks are flush with the rest of the Drawer System.

C

NOTE: Lowering the spare wheel

Remove the Plastic Cap. Open the left hand side drawer and insert the T-bar (Item 11) through the hole and attach it to the Wheel Winder Socket. Turn the T-bar anti-clockwise to lower the spare wheel.

3 FINISH

Congratulations! You did it. Take a step back and admire your work!

4 INSTALL OTHER VEHICLE AND RACK ACCESSORIES

Now's the time to visit your favorite Front Runner Dealer in person or online.

Be sure to tag us. We love to see our gear in action! #FrontRunnerOutfitters #BornToRoam

Share your adventures on:

© 2019 FRONT RUNNER VEHICLE OUTFITTERS