FRONT RUNNER
VEHICLE OUTFITTERS

# DECK COMPLETION SET

## MERCEDES BENZ GELANDEWAGEN

ENG

SSDS803

45 min

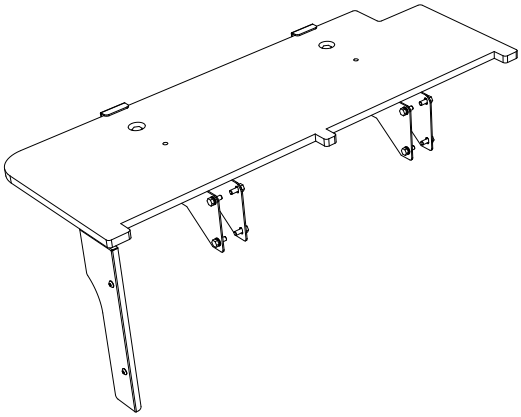

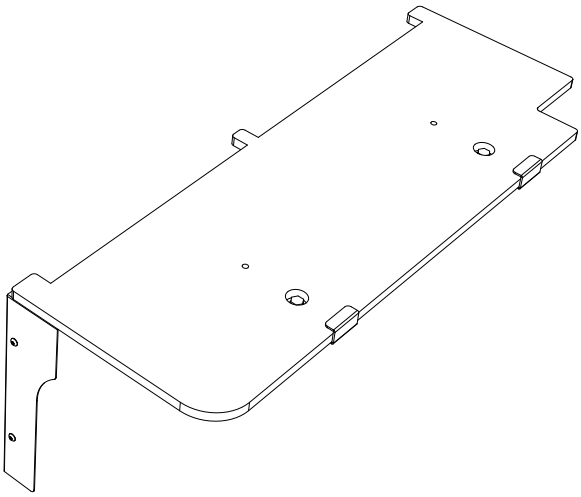

## READ ME !

Thank you for purchasing a Front Runner Mercedes Benz Gelandewagen Deck Completion Set .

Before you start, take a moment to familiarize yourself with this Fitting Instruction and the components received.

Refer to Page 2 for a list of all the components, quantities and tools required.

## IMPORTANT WARNING!

IT IS CRITICAL THAT ALL FRONT RUNNER PRODUCTS BE PROPERLY AND SECURELY ASSEMBLED AND ATTACHED TO YOUR VEHICLE.

IMPROPER ATTACHMENT COULD RESULT IN AN AUTOMOBILE ACCIDENT, AND COULD CAUSE SERIOUS BODILY INJURY OR DEATH.

YOU ARE RESPONSIBLE FOR ASSEMBLING AND SECURING ALL FRONT RUNNER PRODUCTS TO YOUR VEHICLE. CHECKING THE ATTACHMENTS PRIOR TO USE, AND PERIODICALLY INSPECTING THE PRODUCTS FOR ADJUSTMENT, WEAR AND DAMAGE.

THEREFORE YOU MUST READ AND UNDERSTAND ALL OF THE INSTRUCTIONS AND PRECAUTIONS SUPPLIED WITH YOUR FRONT RUNNER PRODUCT PRIOR TO INSTALLATION OR USE.

IF YOU DO NOT UNDERSTAND ALL OF THE INSTRUCTIONS AND CAUTIONS, OR IF YOU HAVE NO MECHANICAL EXPERIENCE AND ARE NOT THOROUGHLY FAMILIAR WITH THE INSTALLATION PROCEDURES,

YOU SHOULD HAVE THE PRODUCT INSTALLED BY A PROFESSIONAL INSTALLER OR OTHER QUALIFIED PERSONNEL.


© COPYRIGHT 2016 FRONT RUNNER VEHICLE OUTFITTERS

## 1 GET ORGANIZED

**Here is what you are looking at for SSDS803**

### IN THE BOX

| | | |
|---|---|---|
| 1 | 1 X | Side Deck 1LH + 1RH |
| 2 | 4 X | M8 x 70 SS Hex Bolt |
| 3 | 4 X | M8 x 25 x 2 Flat Washer |
| 4 | 16 X | M6 x 16 Hex Bolt |
| 5 | 16 X | M6 SS Spring Washer |
| 6 | 16 X | M6 x 12 x 1SS Flat Washer |
| 7 | 4 X | Side Wing Bottom 2LH + 2RH |
| 8 | 4 X | Side Wing Top 2LH + 2RH |
| 9 | 4 X | Laser Cut Flat Washer (SP03) |
| 10 | 4 X | M8 Nyloc Nut |
| 11 | 4 X | M6 x 16 Button Head |
| 12 | 4 X | M6 x 19 x 1SS Flat Washer |
| 13 | 4 X | M6 Cage Nut |
| 14 | 4 X | M5 Nyloc Nut |
| 15 | 4 X | M5 SS Flat Washer |
| 16 | 2 X | Front Face 1LH + 1RH |
| 17 | 4 X | M5 x 10 Button Head |
| 18 | 2 X | Pinch Weld 250mm |

### TOOLS NEEDED

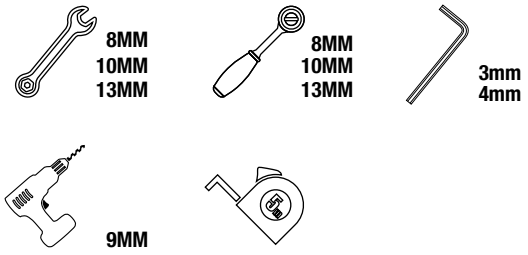


FIGURE 1.1

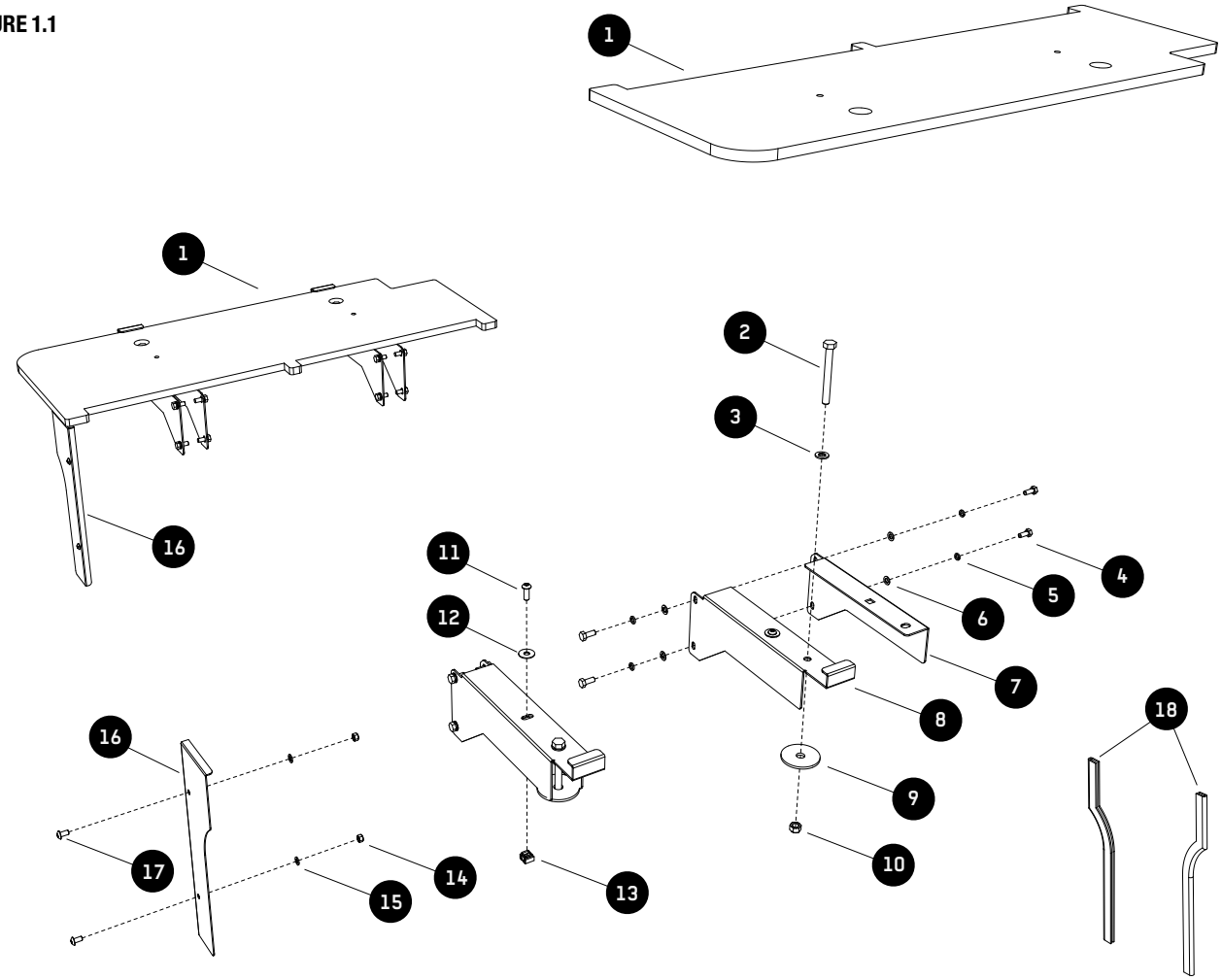


 © COPYRIGHT 2016 FRONT RUNNER VEHICLE OUTFITTERS

## 2 FIT AND SECURE

**2.1**

Loosen and remove both the left and right rear fender liners.

Make sure there are not pipes, pump or electrical components inside the wheel arches as you will be drilling the mounting holes through the arches.
Refer to Diagram 2.4.

**2.2**

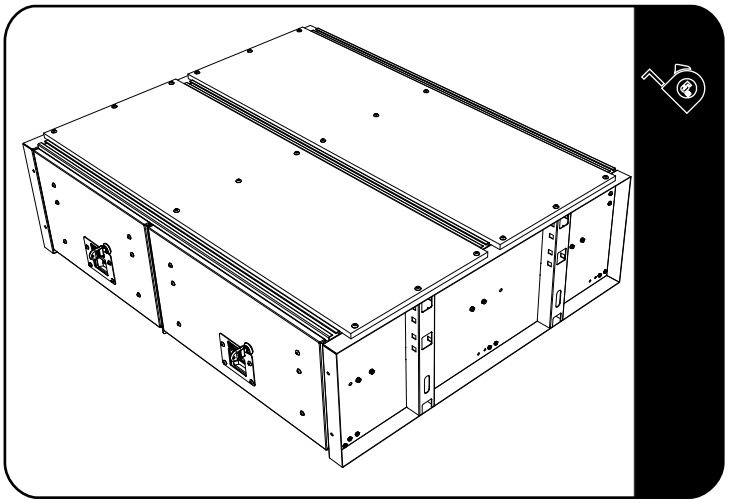

Place the drawer system into the vehicle, locating it as far back as possible without interfering with the rear door operation.

**2.3**

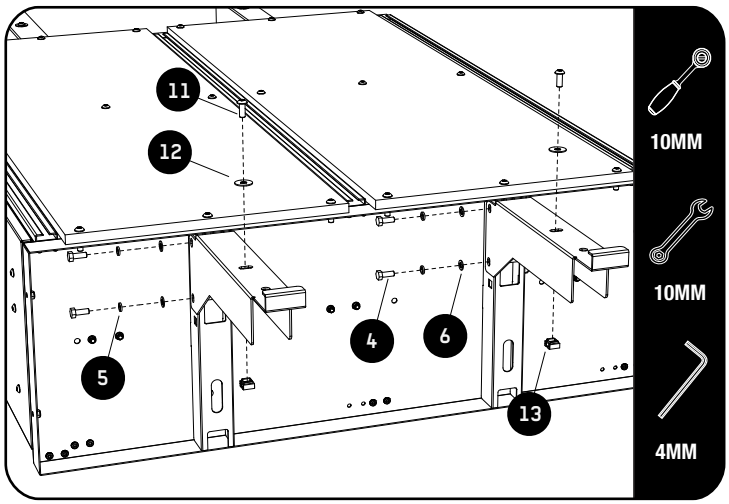


Fit the four mounting brackets, two left and two right. There are two different height options available when mounting the brackets. Choose the option best suited to your vehicle.

The brackets should rest on the wheel arches.

## 2 FIT AND SECURE

**2.4**

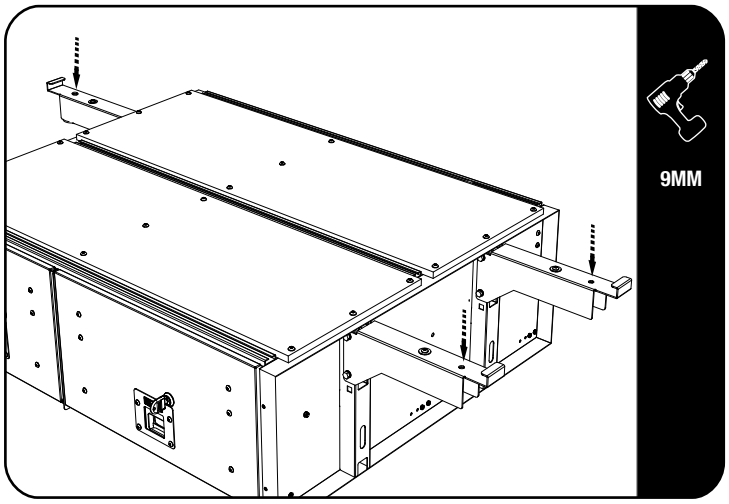


Using the holes in the mounting brackets as guides, drill a 9mm hole through the outer hole of each mounting bracket into the vehicle's wheel arch.

**TAKE NOTE** If your vehicle has a removable cover over the left rear wheel arch inside the vehicle for access to the battery or fuse box. The mounting bracket for this point only requires fitment to the drawer unit not to the vehicle. The remaining 3 mounting points are sufficient.

**2.5**

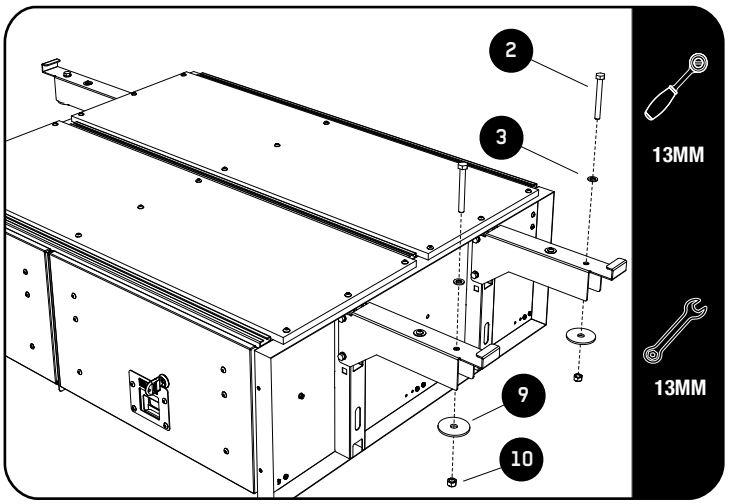


Secure the drawer system to the vehicle using the M8 x 70 Hex Bolts (Item 2), M8x16x1.6SS Flat washer (Item 3), large washer (Item 9) and M8 nyloc nut (Item 10).
Refer to Figure 1.1

**2.6**

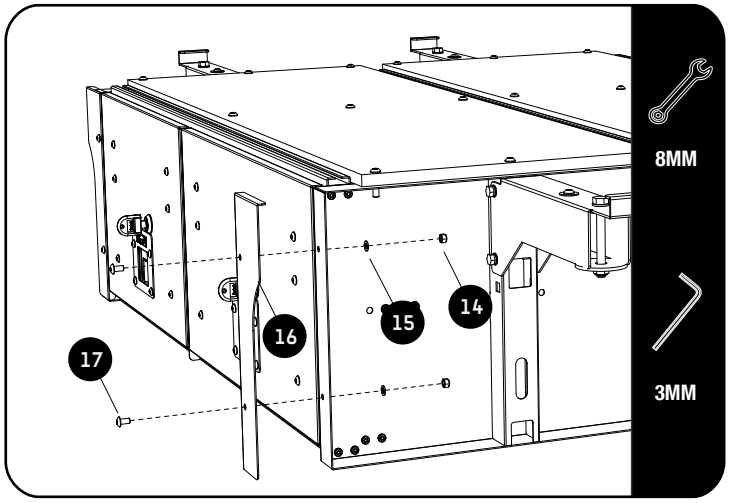


Fit the pinch weld (item 18) to both face edges and then fit both outer front faces with the fasteners shown.


© COPYRIGHT 2016 FRONT RUNNER VEHICLE OUTFITTERS

## 3 COMPLETION

3.1

Congratulations. You did it. Take a step back and admire your work!

## 4 INSTALL OTHER VEHICLE AND RACK ACCESSORIES

Now's the time to visit your favorite Front Runner Dealer in person or online.


© COPYRIGHT 2016 FRONT RUNNER VEHICLE OUTFITTERS