FRONT RUNNER
VEHICLE OUTFITTERS

REAR SEAT DECK COMPLETION SET

MERCEDES BENZ GELANDEWAGEN

ENG

SSDS802

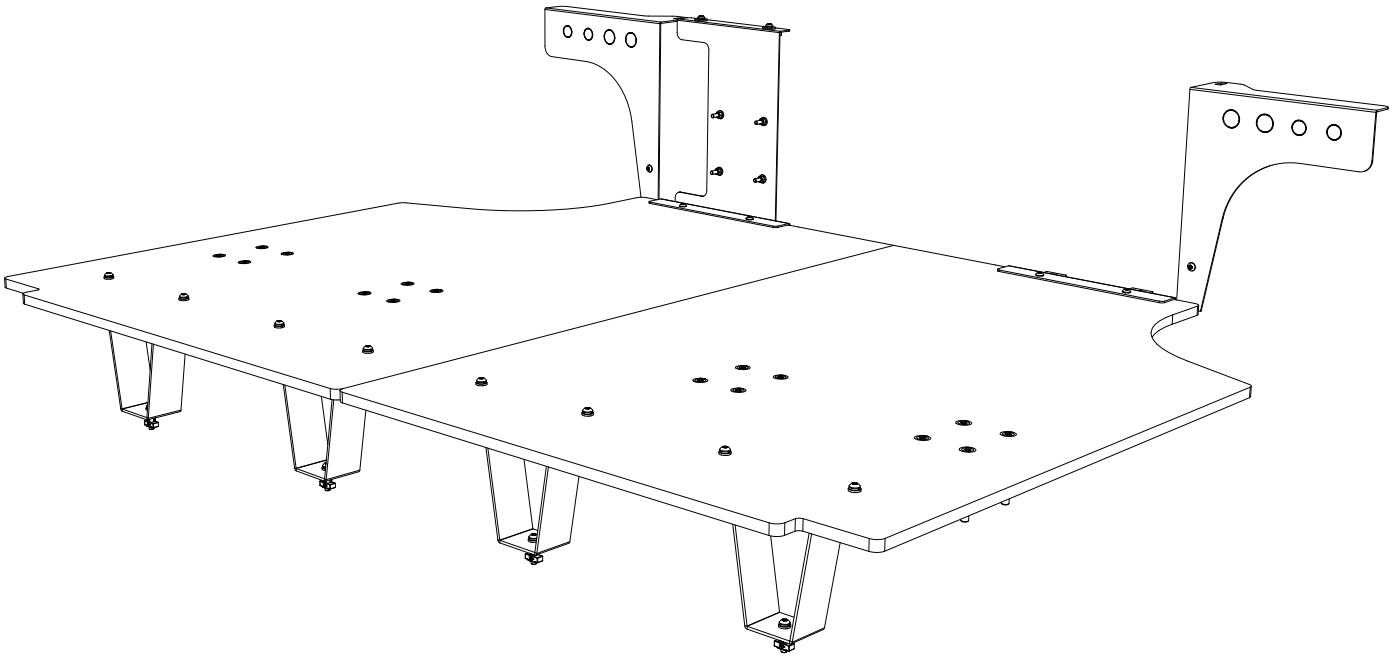

READ ME !

Thank you for purchasing a Front Runner Rear Seat Deck Completion Set.

Before you start, take a moment to familiarize yourself with the Fitting Instructions and the components received.

Refer to Page 2 for a list of all the components, quantities and tools required.

IMPORTANT WARNING!

IT IS CRITICAL THAT ALL FRONT RUNNER PRODUCTS BE PROPERLY AND SECURELY ASSEMBLED AND ATTACHED TO YOUR VEHICLE. IMPROPER ATTACHMENT COULD RESULT IN AN AUTOMOBILE ACCIDENT, AND COULD CAUSE SERIOUS BODILY INJURY OR DEATH. YOU ARE RESPONSIBLE FOR ASSEMBLING AND SECURING ALL FRONT RUNNER PRODUCTS TO YOUR VEHICLE, CHECKING THE ATTACHMENTS PRIOR TO USE, AND PERIODICALLY INSPECTING THE PRODUCTS FOR ADJUSTMENT, WEAR AND DAMAGE. THEREFORE, YOU MUST READ AND UNDERSTAND ALL OF THE INSTRUCTIONS AND PRECAUTIONS SUPPLIED WITH YOUR FRONT RUNNER PRODUCT PRIOR TO INSTALLATION OR USE. IF YOU DO NOT UNDERSTAND ALL OF THE INSTRUCTIONS AND CAUTIONS, OR IF YOU HAVE NO MECHANICAL EXPERIENCE AND ARE NOT THOROUGHLY FAMILIAR WITH THE INSTALLATION PROCEDURES, YOU SHOULD HAVE THE PRODUCT INSTALLED BY A PROFESSIONAL INSTALLER OR OTHER QUALIFIED PERSONNEL.

NOTE: Front Runner will not be responsible for any damage caused by the failure to install the product according to these instructions.

Please call us if you have any questions about the installation of this product.

© COPYRIGHT 2018 FRONT RUNNER VEHICLE OUTFITTERS

1 GET ORGANIZED

Here is what you are looking at for SSDS802

IN THE BOX		
1	1 X	Deck LH
2	1 X	Deck RH
3	14 X	Button Head M6x12
4	18 X	Spring Washer M6
5	2 X	Flat Washer M6x19x1ss
6	1 X	Pump Mounting Plate
7	4 X	Nyloc Nut M5
8	2 X	Nyloc Nut M6
9	2 X	Electrical and Pluming Plate
10	6 X	Channel Nut M6
11	2 X	Z-Bracket
12	16 X	Counter Sunk Screw M8x70
13	12 X	Button Head M6x30

14	16 X	Spacer OD 19 x ID 12.5 x 24 H
15	4 X	Stand Off Floor Bracket
16	8 X	Cage Nut M6
17	4 X	Turn Nut M6
18	4 X	Flat Washer M5
19	22 X	Flat Washer M6

TOOLS NEEDED

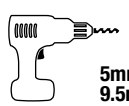
5mm
9.5mm

4mm
5mm

8MM
10MM

FIGURE 1.1

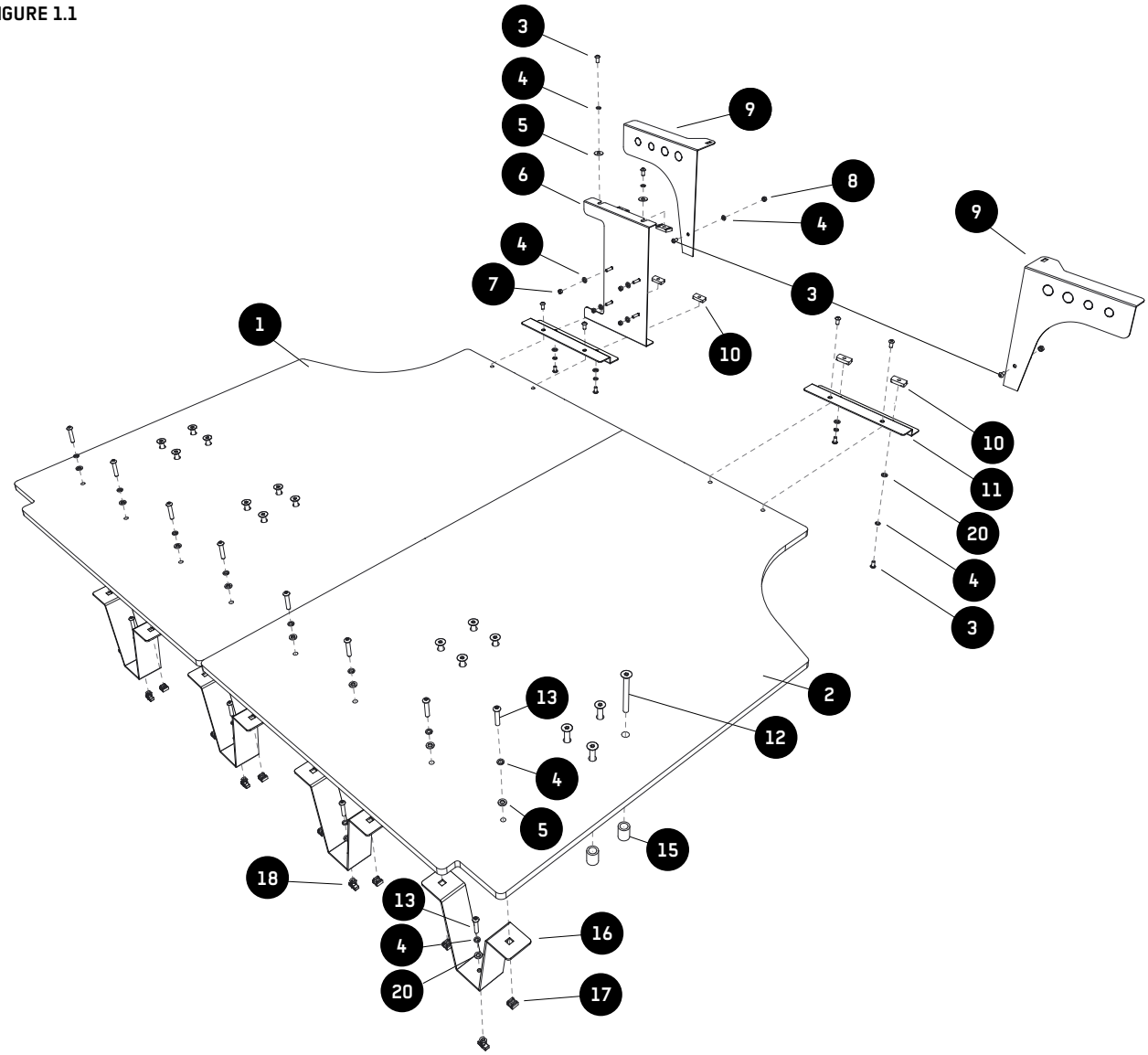

 © COPYRIGHT 2018 FRONT RUNNER VEHICLE OUTFITTERS

2 FIT AND SECURE

2.1

Loosen the rear panel of the drawer and slide 4 channel nuts (item 10) into the bottom extrusion and 2 channel nuts into the top extrusion. Tighten the rear panel again after you are done.

2.2

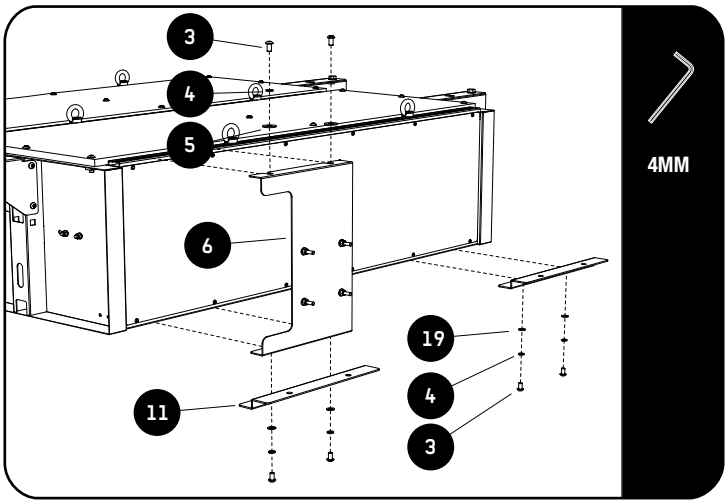

Secure items 6 and 11 to the drawer using the channel nuts and the fasteners shown in 2.2.

2.3

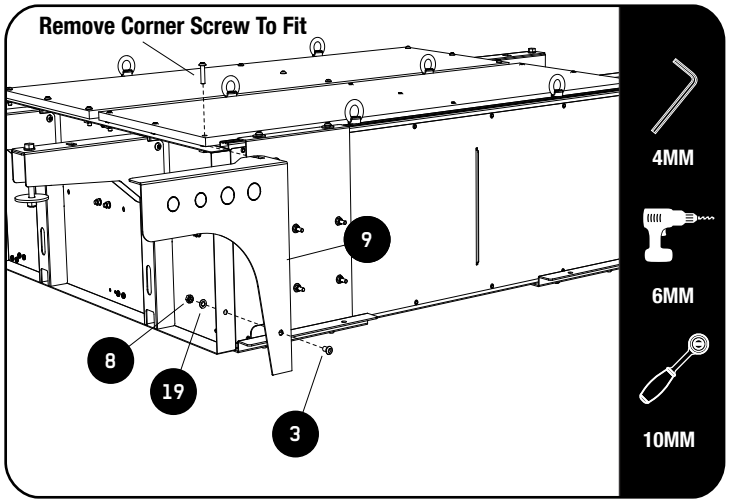

Secure item 9 to the rear left and rear right side of the drawer. To do this you need to loosen the corner of the drawer deck. Place item 9 in position and drill a 6mm through the bottom hole of item 9 into the drawers side panel. Secure with the fasteners shown.

© COPYRIGHT 2018 FRONT RUNNER VEHICLE OUTFITTERS

2 FIT AND SECURE

2.4

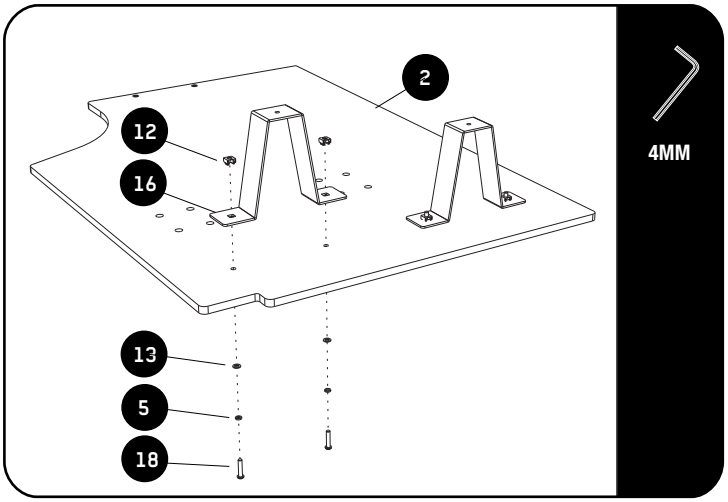

Fix item 16 to item 1 with the fasteners shown in 2.4. Repeat this on item 1.

2.5

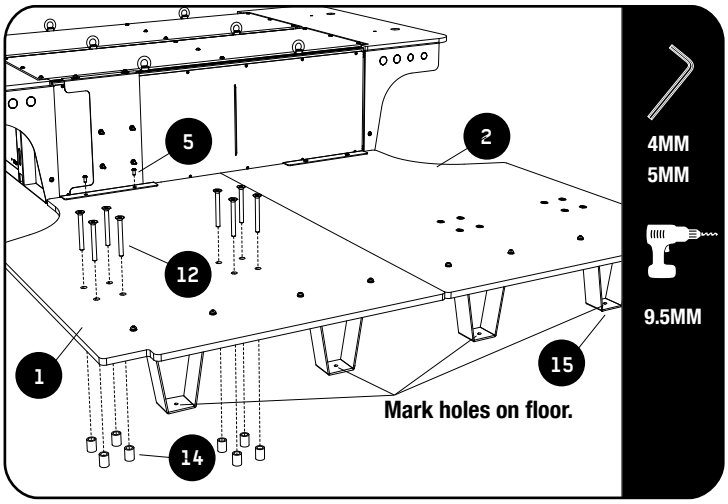

Fit Item 1 and 2 to the drawer using the fasteners shown. Use items 12 and 14 to align the deck with the existing seat holes. Mark the holes in item 15 on the vehicles floor. Remove the item 1 & 2 and drill a 9.5mm hole on each of the marks you have made.

Take care when drilling through the floor as the exhaust and fuel tank are beneath.

2.6

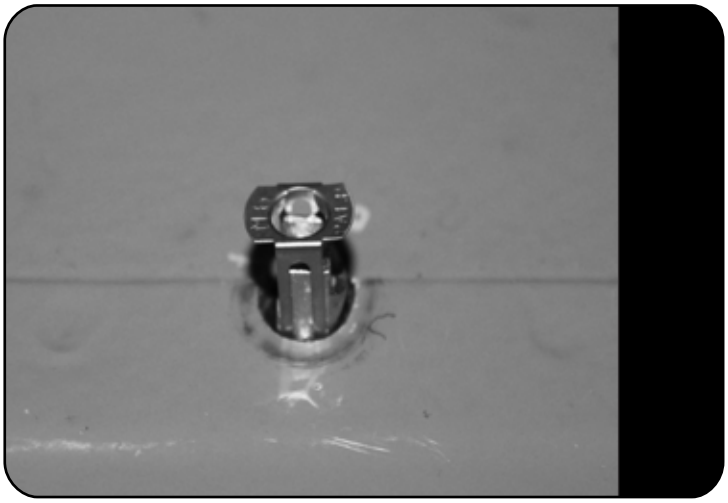

Place item 17 in each of the holes you have drilled, and use item 13 to set the turn nut in place.
Do this by turning the screw in a few turns and pulling it up toward you.
Remove the screw.

© COPYRIGHT 2018 FRONT RUNNER VEHICLE OUTFITTERS

2 FIT AND SECURE

2.7

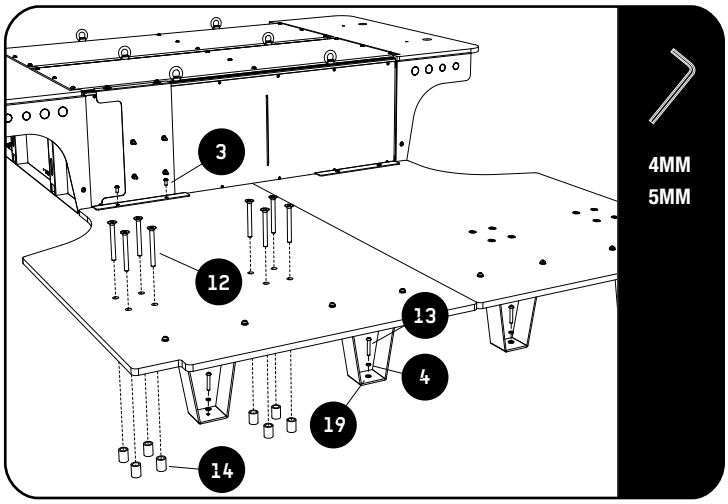

Refit the deck with the the fasteners shown and fully tighten.

3 COMPLETION

3.1

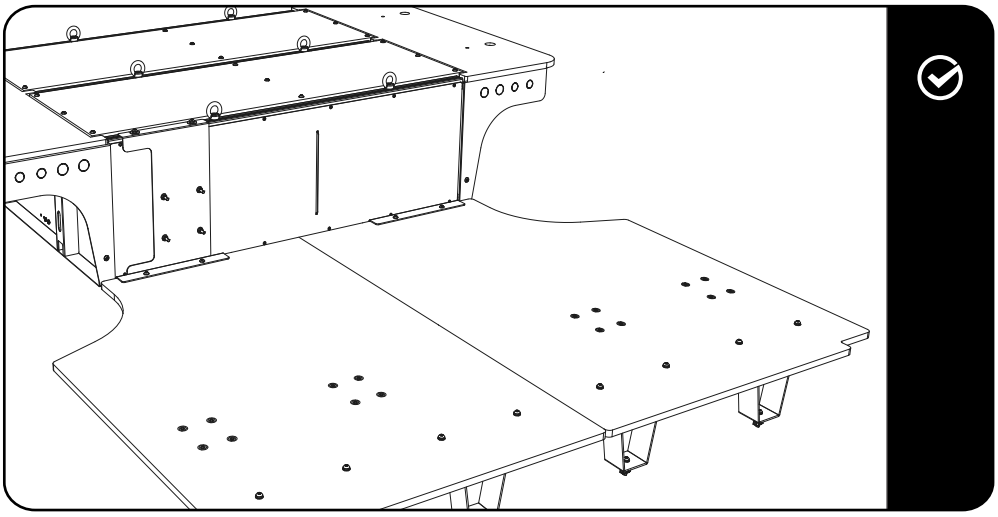

Congratulations! You did it. Take a step back and admire your work!

4 INSTALL OTHER VEHICLE AND RACK ACCESSORIES

Now's the time to visit your favorite Front Runner Dealer in person or online.

Be sure to tag us. We love to see our gear in action! #FrontRunnerOutfitters #BornToRoam

Share your adventures on:

© COPYRIGHT 2018 FRONT RUNNER VEHICLE OUTFITTERS