FRONT RUNNER
VEHICLE OUTFITTERS

MITSUBISHI TRITON (L200)
DECK COMPLETION SET

ENG

SSDS602

45 min

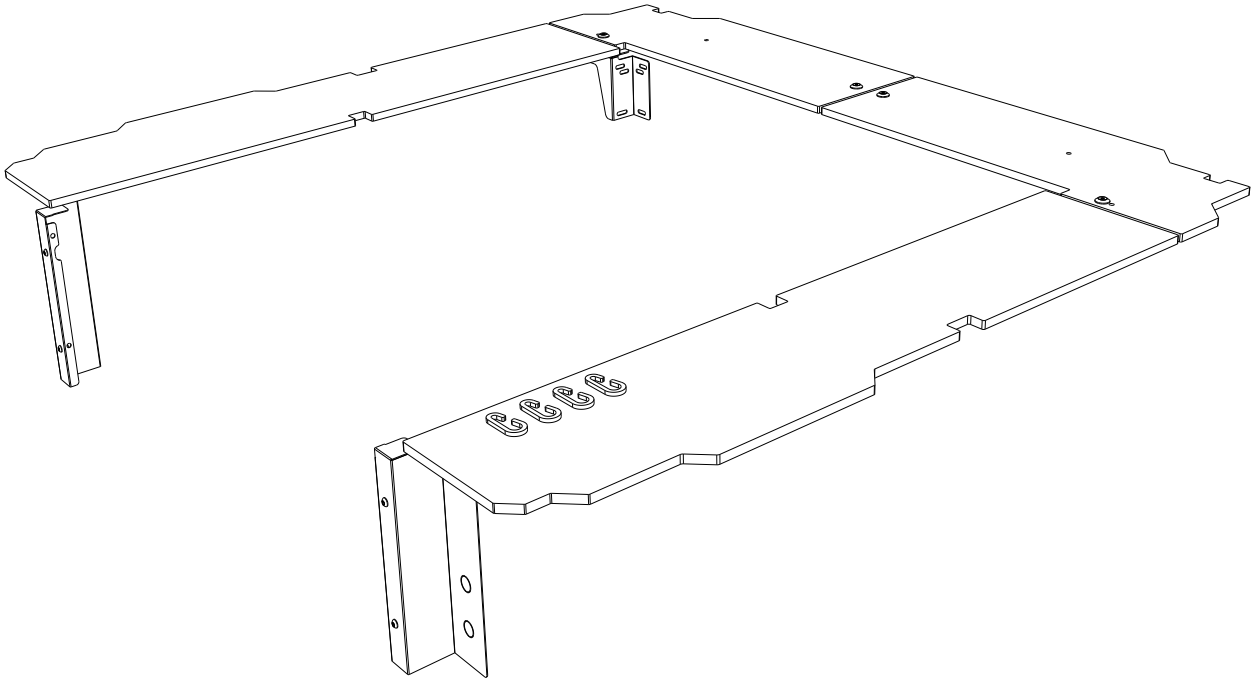

READ ME !

Thank you for purchasing a Front Runner Deck Completion Set.

Before you start, take a moment to familiarize yourself with the Fitting Instructions and the components received.

Refer to Page 2 for a list of all the components, quantities and tools required.

IMPORTANT WARNING!

IT IS CRITICAL THAT ALL FRONT RUNNER PRODUCTS BE PROPERLY AND SECURELY ASSEMBLED AND ATTACHED TO YOUR VEHICLE. IMPROPER ATTACHMENT COULD RESULT IN AN AUTOMOBILE ACCIDENT, AND COULD CAUSE SERIOUS BODILY INJURY OR DEATH. YOU ARE RESPONSIBLE FOR ASSEMBLING AND SECURING ALL FRONT RUNNER PRODUCTS TO YOUR VEHICLE. CHECKING THE ATTACHMENTS PRIOR TO USE, AND PERIODICALLY INSPECTING THE PRODUCTS FOR ADJUSTMENT, WEAR AND DAMAGE. THEREFORE YOU MUST READ AND UNDERSTAND ALL OF THE INSTRUCTIONS AND PRECAUTIONS SUPPLIED WITH YOUR FRONT RUNNER PRODUCT PRIOR TO INSTALLATION OR USE. IF YOU DO NOT UNDERSTAND ALL OF THE INSTRUCTIONS AND CAUTIONS, OR IF YOU HAVE NO MECHANICAL EXPERIENCE AND ARE NOT THOROUGHLY FAMILIAR WITH THE INSTALLATION PROCEDURES, YOU SHOULD HAVE THE PRODUCT INSTALLED BY A PROFESSIONAL INSTALLER OR OTHER QUALIFIED PERSONNEL.

© COPYRIGHT 2016 FRONT RUNNER VEHICLE OUTFITTERS

1 GET ORGANIZED

IN THE BOX

1	1 X	Side Deck LH
2	1 X	Rear Deck LH
3	1 X	Rear Deck RH
4	1 X	Side Deck RH
5	1 X	Front Face RH
6	1 X	Front Face LH
7	4 X	M6 x 12 Button Head
8	4 X	M6 x 12 x 1SS Flat Washer
9	4 X	M6 Nyloc Nut
10	4 X	60mm Carabiner
11	2 X	M6 Cage Nut
12	1 X	Rear Corner Wing Bracket RH
13	1 X	Rear Corner Wing Bracket LH
14	4 X	Finishing Washer
15	4 X	M6 x 30 Countersink Screw

TOOLS NEEDED

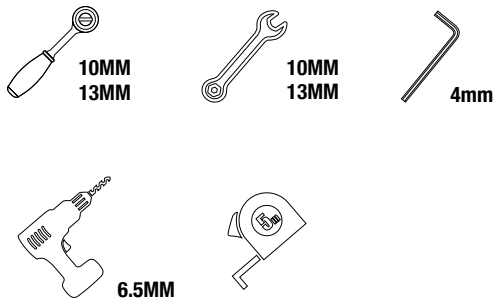

FIGURE 1.1

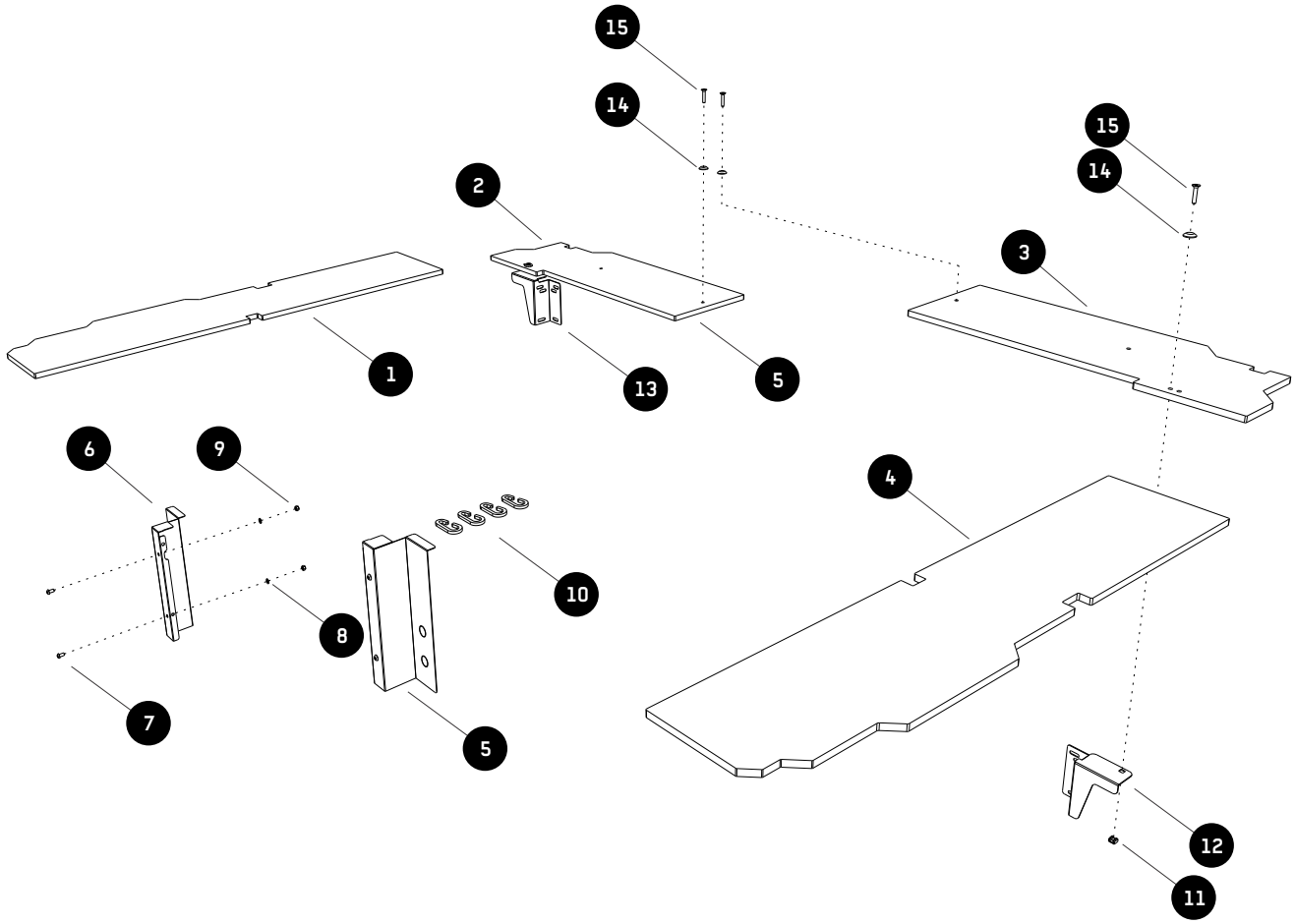

 © COPYRIGHT 2016 FRONT RUNNER VEHICLE OUTFITTERS

2 FIT AND SECURE

2.1

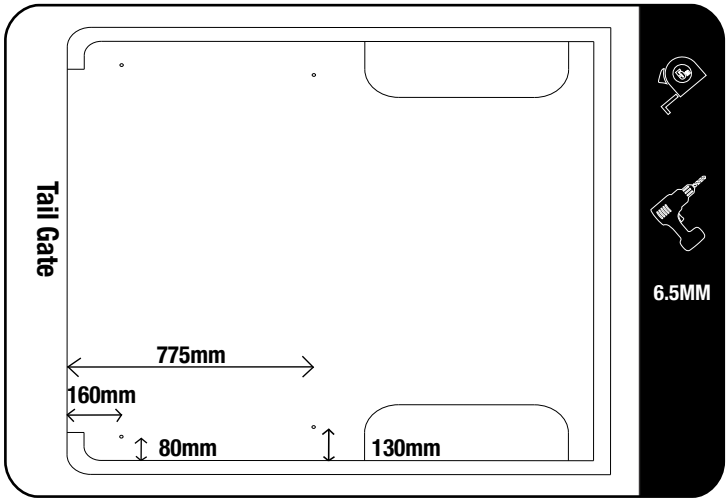

Using the measurements shown, measure and mark the positions of the holes you need to drill. Do this on both left and right side of the loadbed.

Drill 6.5mm holes on the markings you just made.

2.2

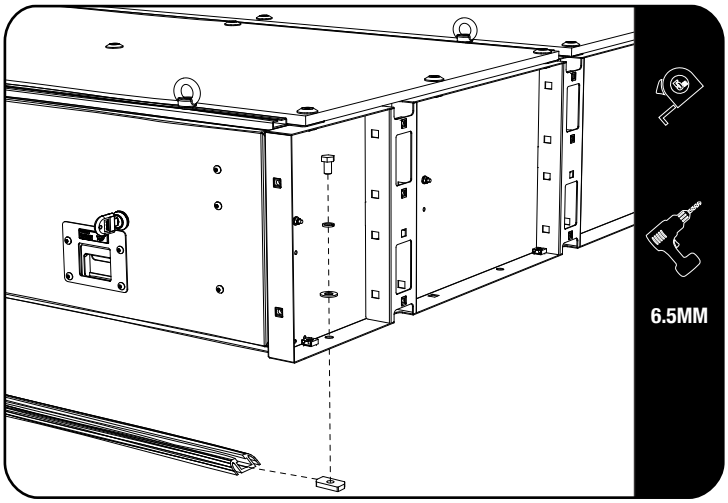

Slide 2 channel nuts into the track. Center the track under the drawer and secure with the fasteners as shown. Refer to SSDR010 / SSWO008 fitting instruction.

Place the Drawer System in the load-bed. Center the Drawer System left to right and space it 65mm from the rear of the loadbed.

2.3

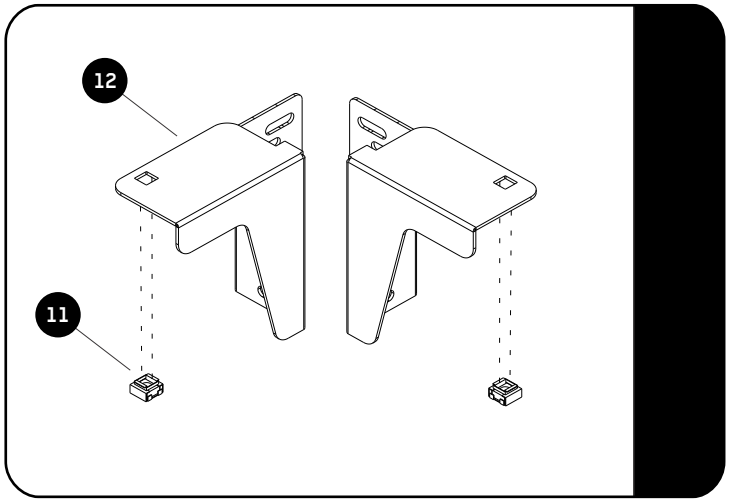

Before you start to fit the wing brackets to the Drawer, clip the M6 Cage Nuts (Item 11) into the Rear Corner Wings (Item 12 & 13) supplied with SSDS602.

2 FIT AND SECURE

2.4

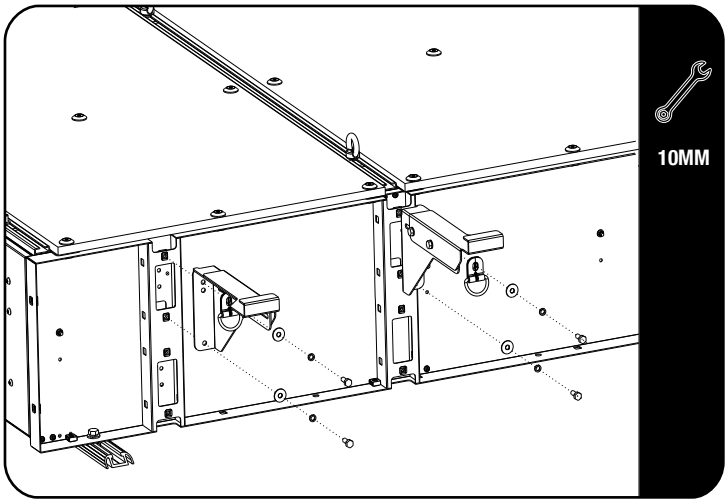

Refer to the SSWS001 fitting instruction to assemble the Wing Brackets before you start to fit them to the Drawer.

After you have assembled the Wing Brackets, fit them to the Drawer System as shown.

Use the fasteners supplied with SSWS001. Do the same on both sides of the Drawer System.

2.5

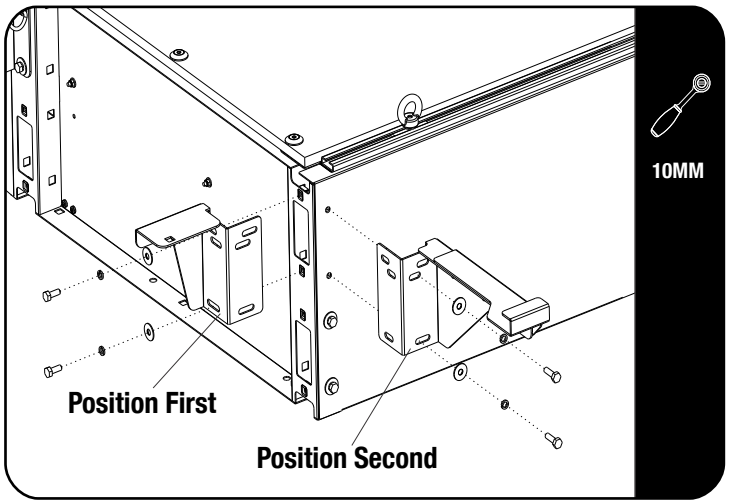

When fitting the Rear Corner Wing Brackets (Item 12 & 13) take note of the position. Item 12 & 13 needs to be placed on the Drawer first, followed by the corner wing supplied with SSWS001.

Use the fasteners supplied with SSWS001 to secure the wing brackets to the Drawer System as shown.

Repeat this on the other rear corner of the Drawer System.

2.6

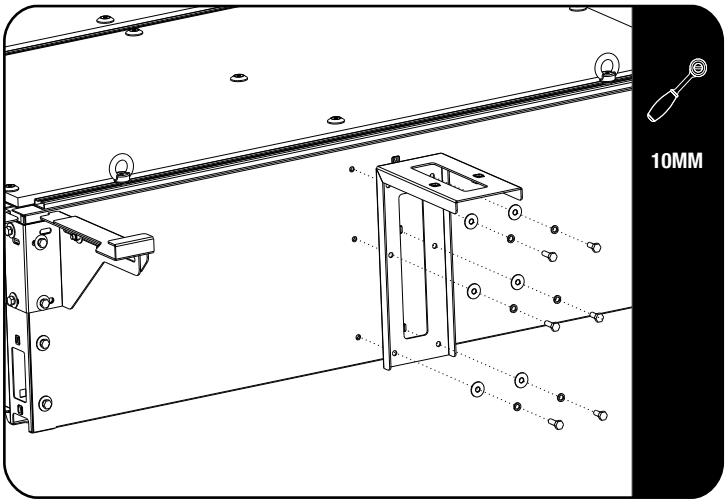

The rear support bracket is also part of SSWS001. Fit and secure with the fasteners supplied with SSWS001 as shown.

 © COPYRIGHT 2016 FRONT RUNNER VEHICLE OUTFITTERS

2 FIT AND SECURE

2.7

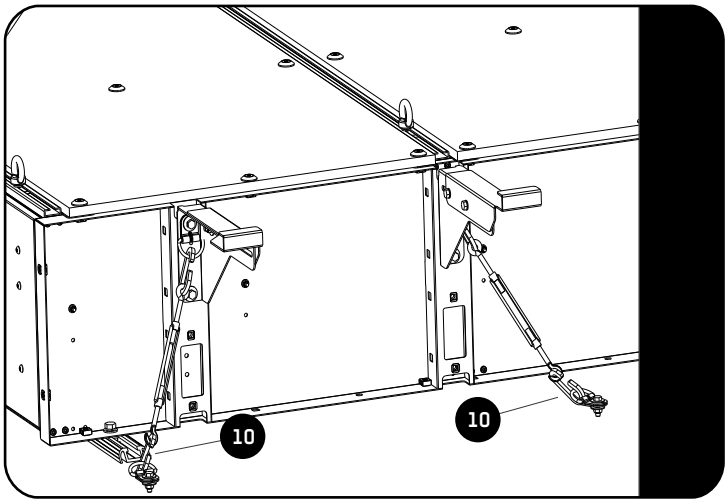

Secure the D-Rings supplied with SSDR010/SSWO008 using the holes you drilled in Step 2.1.

Use the Turnbuckles and 60mm Carabiners supplied with SSDR010/SSWO008 to secure the System to the loadbed as shown.

Tighten the Wing Nuts to prevent the Turnbuckles from coming loose.

Securing Front Faces To SSDR010

2.8

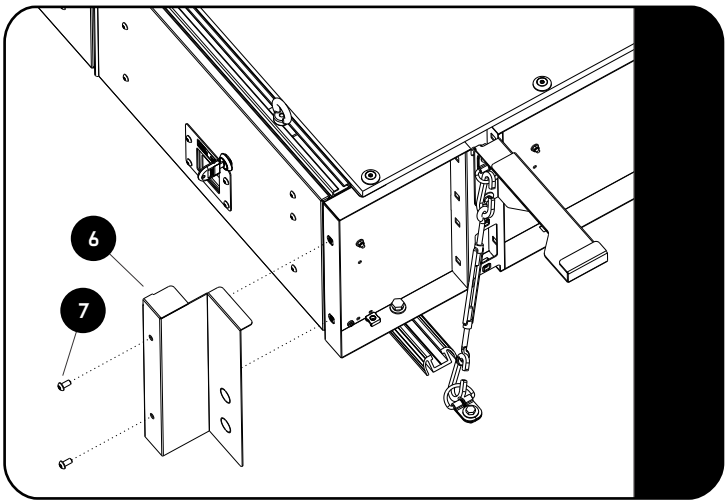

Secure the Front Faces (Item 5 & 6) to the Cage Nuts in the Drawer System (SSDR010) using M6 x 12 Button Heads (Item 7) as shown.

Repeat this on the other side of the drawer.

Securing Front Faces To SSWS008

2.9

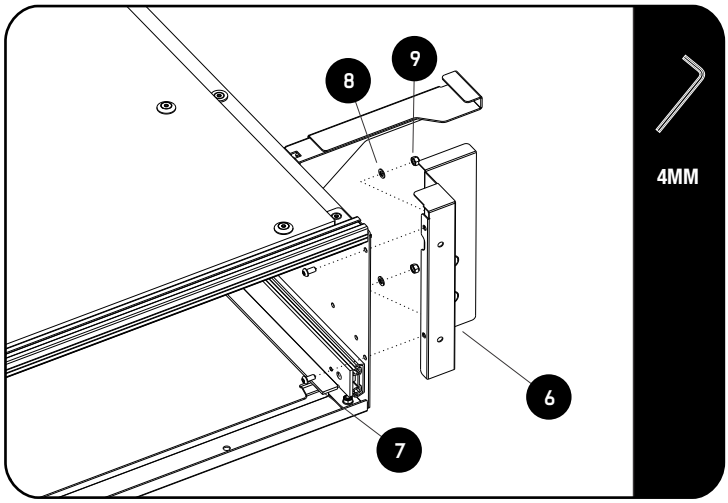

Secure the Front Faces (Item 5 & 6) to the Wolf Box System (SSWO008) using M6 x 12 button Heads, M6 x 12 x 1SS Flat Washers and M6 Nyloc Nuts (Item 7, 8 & 9) as shown.

Repeat this on the other side of the drawer.

© COPYRIGHT 2016 FRONT RUNNER VEHICLE OUTFITTERS

2 FIT AND SECURE

2.10

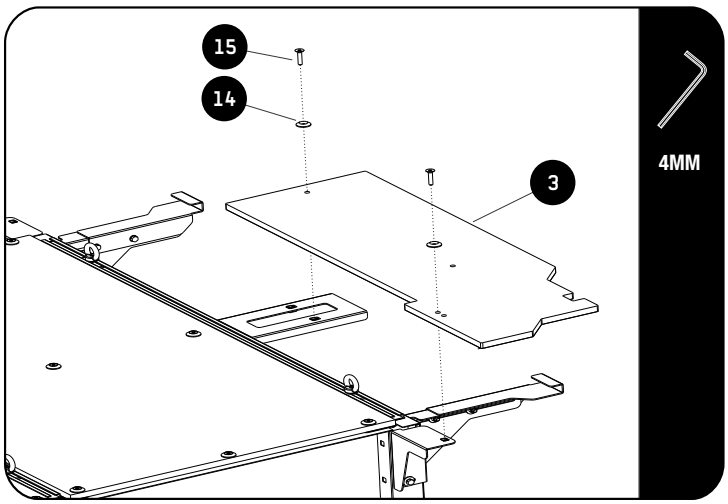

Fit the LH & RH Rear Decks (Items 2 & 3) with M6 x 30 Countersink Screws and M6 Finishing Washers (Items 14 & 15) as shown.

2.11

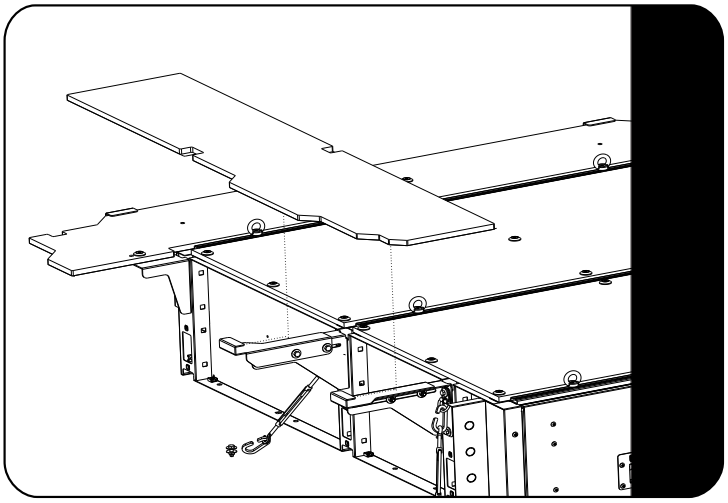

Fit the Side Decks (Items 1 & 4) to the Drawer by sliding it into the C-Clips.

2.12

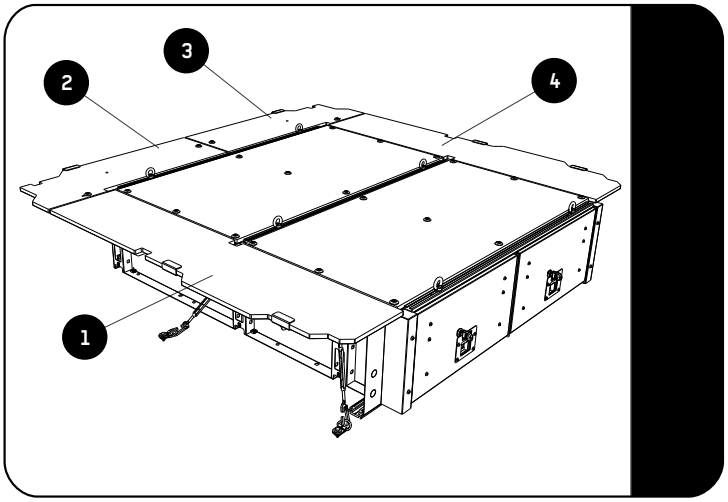

Position of all four Decks.

© COPYRIGHT 2016 FRONT RUNNER VEHICLE OUTFITTERS

3 COMPLETION

3.1

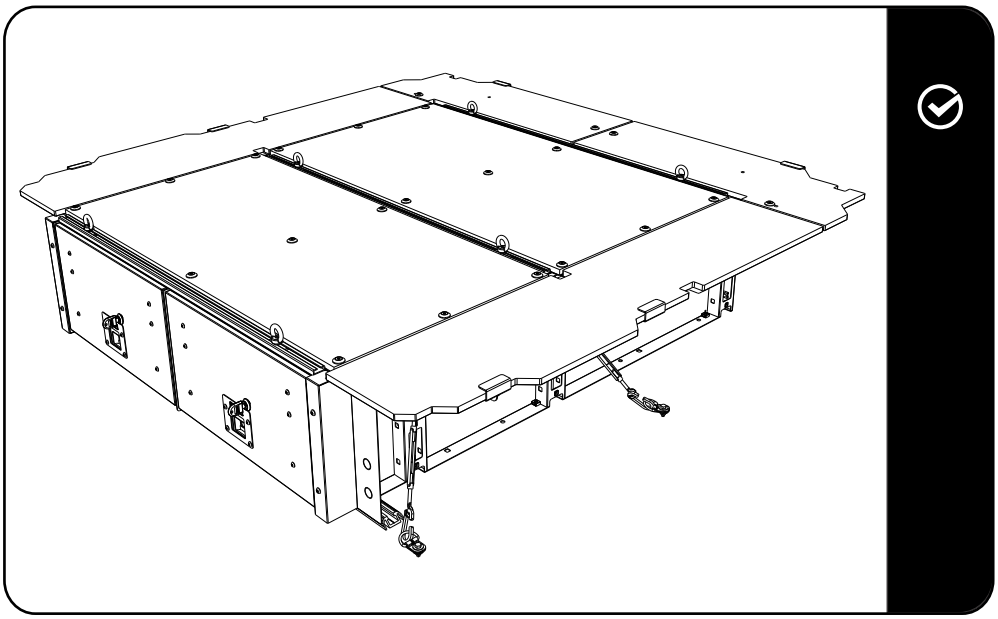

Congratulations! You did it. Take a step back and admire your work!

4 Front Runner will not be responsible for any damage caused by the failure to install the product according to these instructions. Please call us if you have any questions about the installation of this product.

5 INSTALL OTHER VEHICLE AND RACK ACCESSORIES

Now's the time to visit your favorite Front Runner Dealer in person or Online.

Be sure to tag us. We love to see our gear in action! #FrontRunnerOutfitters #BornToRoam

Share your adventures on:

© COPYRIGHT 2016 FRONT RUNNER VEHICLE OUTFITTERS