FRONT RUNNER

MITSUBISHI PAJERO CK DRAWER DECK COMPLETION SET

ENG

SSDS601

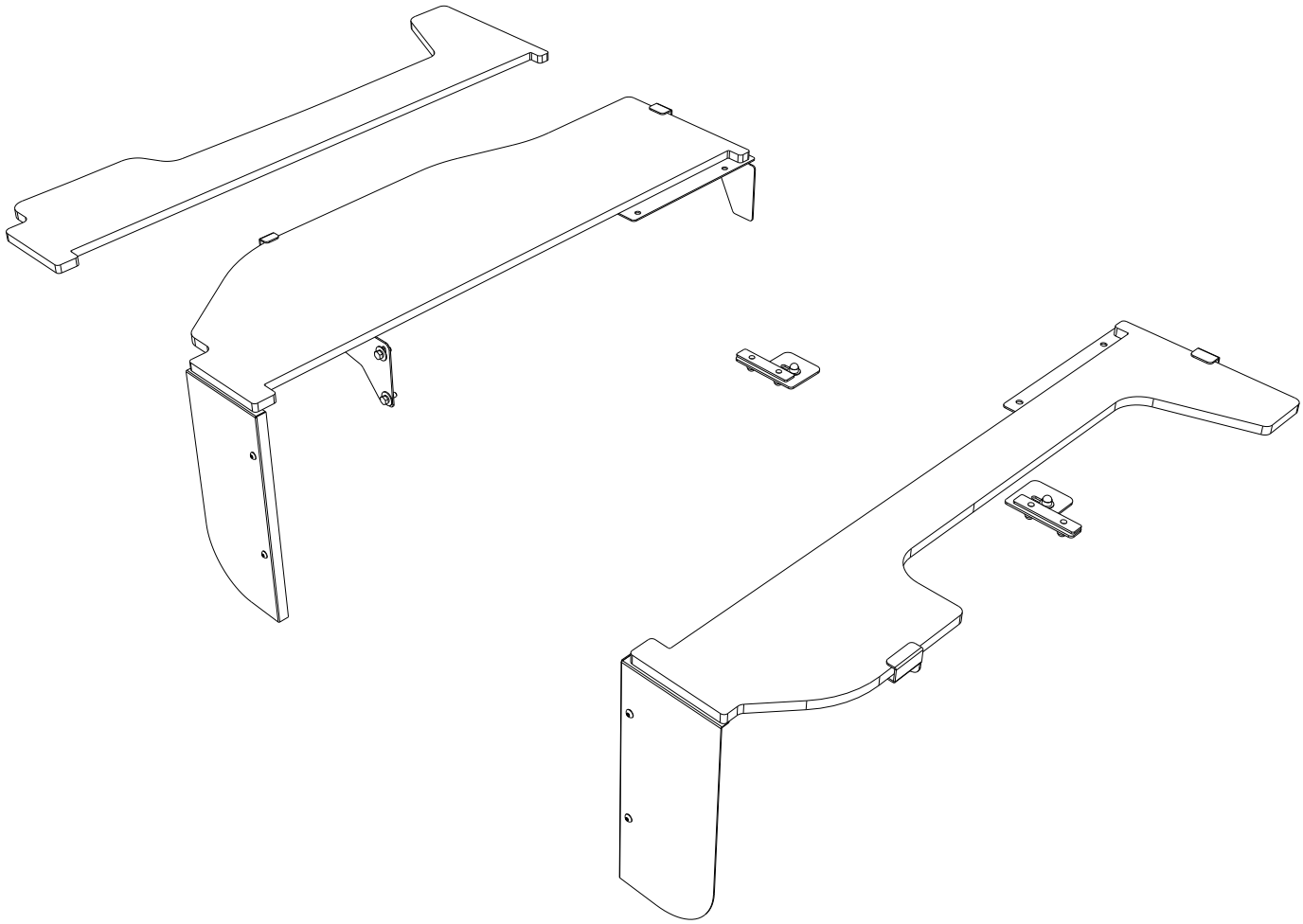

READ ME !

Thank you for purchasing a Front Runner Deck Completion Set.

Before you start, take a moment to familiarize yourself with the Fitting Instructions and the components received.

Refer to Page 2 for a list of all the components, quantities and tools required.

IMPORTANT WARNING!

IT IS CRITICAL THAT ALL FRONT RUNNER PRODUCTS BE PROPERLY AND SECURELY ASSEMBLED AND ATTACHED TO YOUR VEHICLE. IMPROPER ATTACHMENT COULD RESULT IN AN AUTOMOBILE ACCIDENT, AND COULD CAUSE SERIOUS BODILY INJURY OR DEATH. YOU ARE RESPONSIBLE FOR ASSEMBLING AND SECURING ALL FRONT RUNNER PRODUCTS TO YOUR VEHICLE, CHECKING THE ATTACHMENTS PRIOR TO USE, AND PERIODICALLY INSPECTING THE PRODUCTS FOR ADJUSTMENT, WEAR AND DAMAGE. THEREFORE, YOU MUST READ AND UNDERSTAND ALL OF THE INSTRUCTIONS AND PRECAUTIONS SUPPLIED WITH YOUR FRONT RUNNER PRODUCT PRIOR TO INSTALLATION OR USE. IF YOU DO NOT UNDERSTAND ALL OF THE INSTRUCTIONS AND CAUTIONS, OR IF YOU HAVE NO MECHANICAL EXPERIENCE AND ARE NOT THOROUGHLY FAMILIAR WITH THE INSTALLATION PROCEDURES, YOU SHOULD HAVE THE PRODUCT INSTALLED BY A PROFESSIONAL INSTALLER OR OTHER QUALIFIED PERSONNEL.

NOTE: Front Runner will not be responsible for any damage caused by the failure to install the product according to these instructions.

Please call us if you have any questions about the installation of this product.

 © 2020 FRONT RUNNER VEHICLE OUTFITTERS

1 GET ORGANIZED

IN THE BOX

1	1 X	Left Hand Side Deck (Rockford Sound)
2	1 X	Left Hand Side Deck
3	1 X	Right Hand Side Deck
4	1 X	Left Rear Wing Bracket
5	1 X	Right Rear Wing Bracket
6	1 X	Left Rear Wing
7	1 X	Right Rear Wing
8	1 X	Left Front Wing
9	1 X	Right Front Wing
10	2 X	Pajero Deck Front Plate LH + RH'
11	2 X	Drawer Rear Mount Plate 1
12	2 X	Drawer Rear Mount Plate 2
13	6 X	M6 Nut Caps
14	2 X	M6 x 30 Hex Bolt
15	6 X	M6 Spring Washer
16	6 X	M6 x 19 x 1SS Flat Washer

IN THE BOX

17	4 X	M6 x 12 x 1SS Flat Washer
18	4 X	M6 Nyloc Nut
19	4 X	M6 x 16 Hex Bolt
20	2 X	Laser Carabiner Hook 37mm
21	8 X	M5 x 12 Button Head Bolt
22	8 X	M5 x 10 x 1SS Flat Washer
23	8 X	M5 Nyloc Nut
24	1 X	Square Recess Bit No. 2 x 25
25	2 X	Pinch Weld 450mm Long
26	1 X	Left Front Wing (Rockford Sound)

TOOLS NEEDED

8mm
10mm

3mm
4mm

Square Recess Bit

FIGURE 1.1

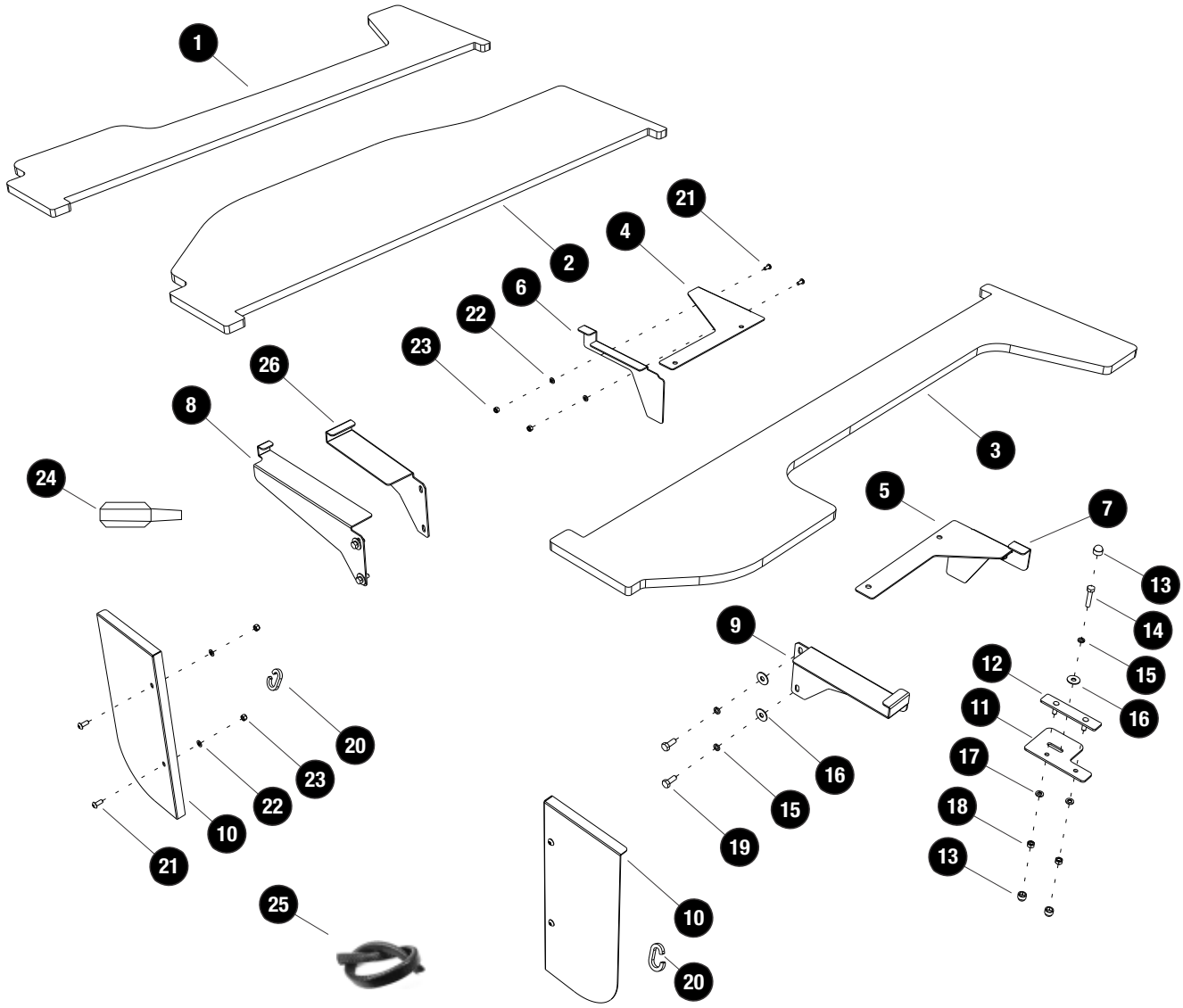

 © 2020 FRONT RUNNER VEHICLE OUTFITTERS

2 FIT AND SECURE

2.1

Loosen and remove the two tie down points located on the floor of the vehicle behind the rear passenger seats.

2.2

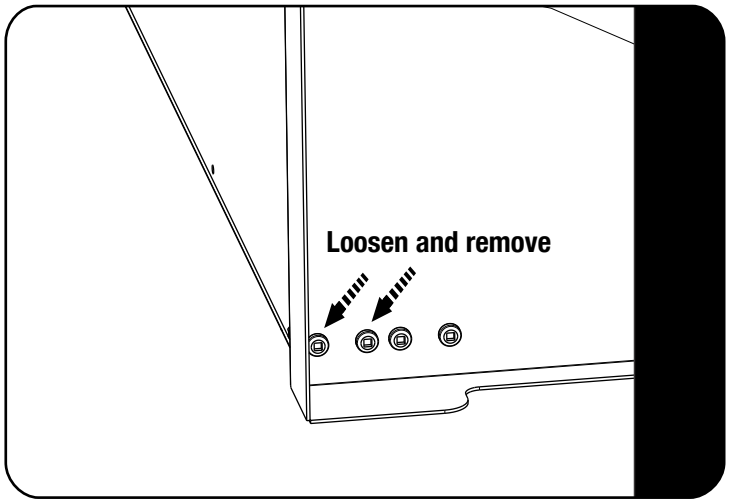

Working at the bottom right rear corner of the Drawer, use the Square Recess Bit (Item 24) provided and remove the two screws as indicated.

Keep the screws in a safe place as the will be reused in 2.3.

2.3

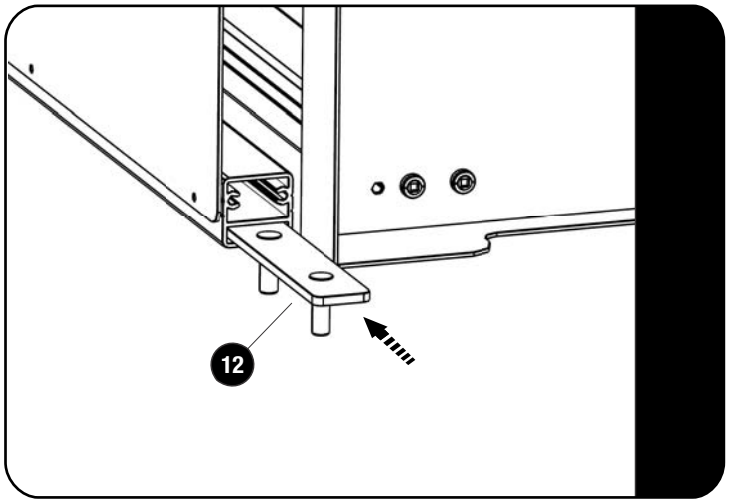

Pull the Drawer's backing plate and the attached aluminium extrusion away from the corner of the Drawer as shown.

Slide the two Stud Plates (Item 12) in to the extrusion as shown.

Push the extrusion and backing plate into position and secure using the two screws removed in 2.2.

© 2020 FRONT RUNNER VEHICLE OUTFITTERS

2 FIT AND SECURE

2.4

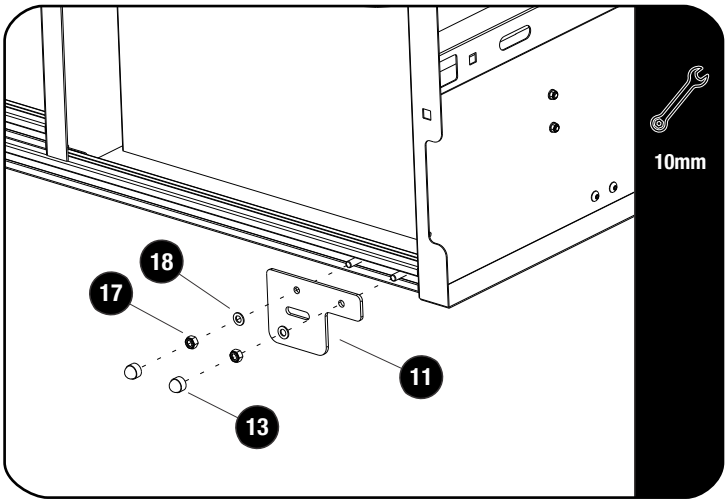

Slide both Stud Plates from 2.3 to either side of the extrusion, against the side of the Drawer. Secure the Mounting Plates (Item 11) to the Stud Plates using four M6 Flat Washers and four M6 Nyloc Nuts (Items 17 & 18).

Place a M6 Nut Cap (Item 13) over each Nyloc Nut.

2.5

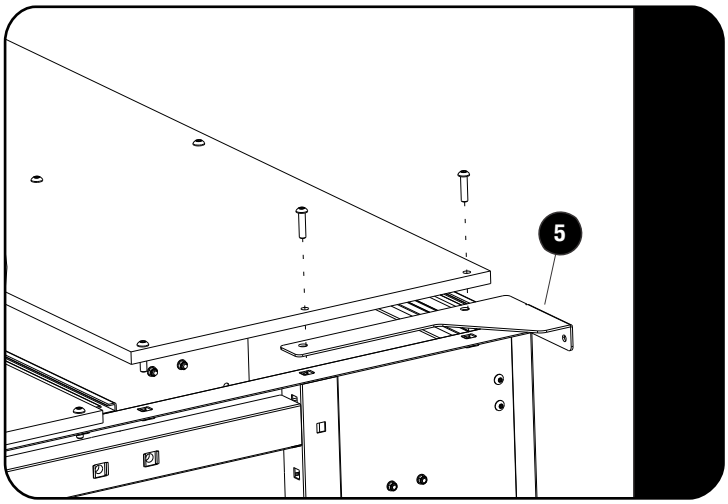

Loosen the nine Countersunk Bolts securing the Rear Deck to the Drawer System.

Lift the Deck and place the Left and Right Hand Rear Wing Brackets (Items 4 & 5) in position between the Deck and Drawer System as shown.

Secure the Deck back to the Drawer System, "sandwiching" the Wing Brackets between the Deck and Drawer.

2.6

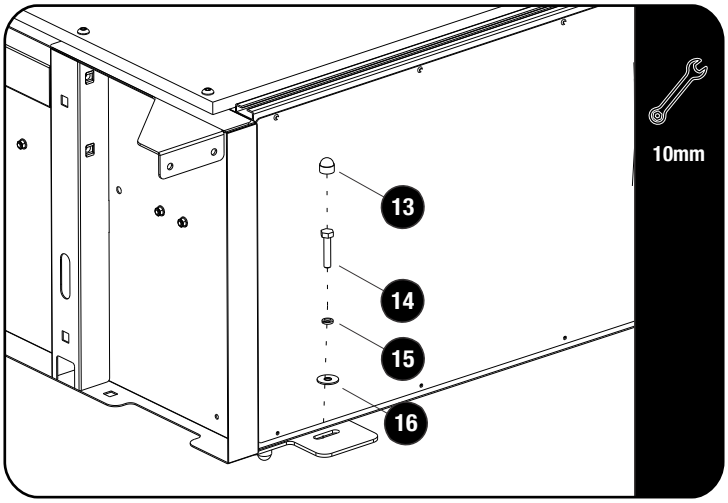

Place the Drawer System into the vehicle lining up the holes in the Mounting Plates from 2.4 with the threaded mounting points in the vehicle's floor from 2.1.

Loosely fasten the rear of the Drawer System to the vehicle using two M6 x 30 Hex Bolts,two M6 Spring Washers and two M6 x 19Flat Washers (Items 14, 15 & 16).

Center the Drawer, left to right, and tighten the Hex Bolts.

Place a M6 Nut Cap (Item 13) over each Hex Bolt.

© 2020 FRONT RUNNER VEHICLE OUTFITTERS

2 FIT AND SECURE

2.7

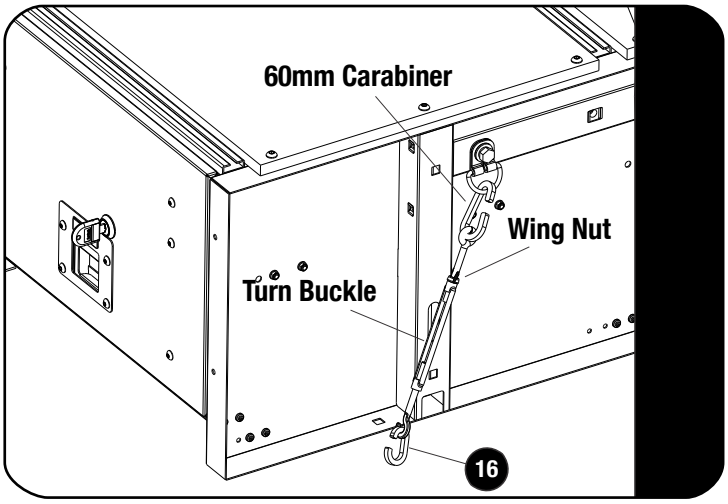

Secure the front of the Drawer System to the tie down points at the rear of the vehicle using two M6 Turn Buckles, two 60 mm Laser Cut Carabiners (supplied with SSDR005) and two 37 mm Laser Cut Carabiners (Item 20) as shown.

Use the wing nuts on the turnbuckles to lock them.

2.8

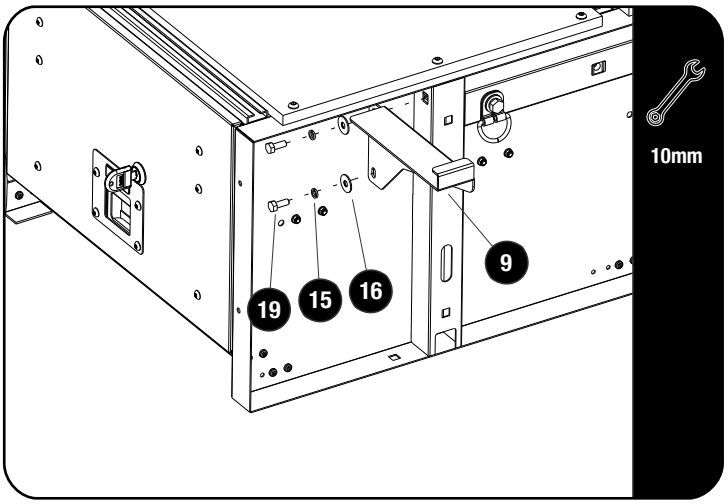

Secure the Right Front Wings (Item 9) to the Drawer System using four M6 x 16 Hex Bolts,four M6 Spring Washers and four M6 x 19 Flat Washers (Items 15, 16, 19) as shown.

2.9

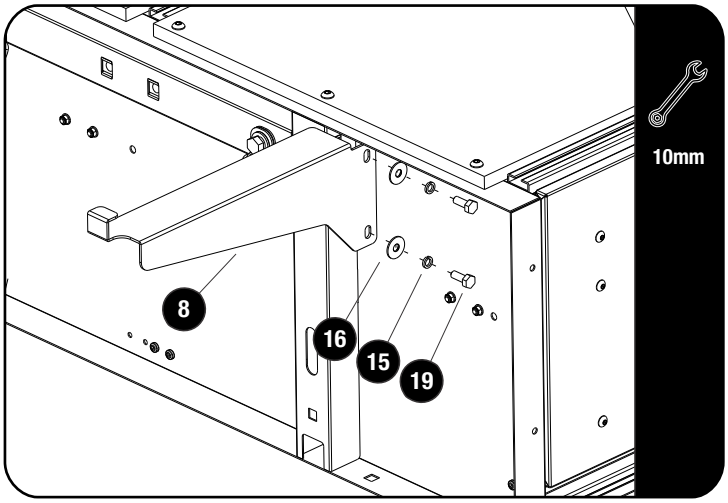

Secure the Left Front Wings (Item 8) to the Drawer System using four M6 x 16 Hex Bolts,four M6 Spring Washers and four M6 x 19 Flat Washers (Items 15, 16, 19) as shown.

If your vehicle is fitted with the Rockford Shound system, use the shorter Left Front Wing (Item 26).

© 2020 FRONT RUNNER VEHICLE OUTFITTERS

2 FIT AND SECURE

2.10

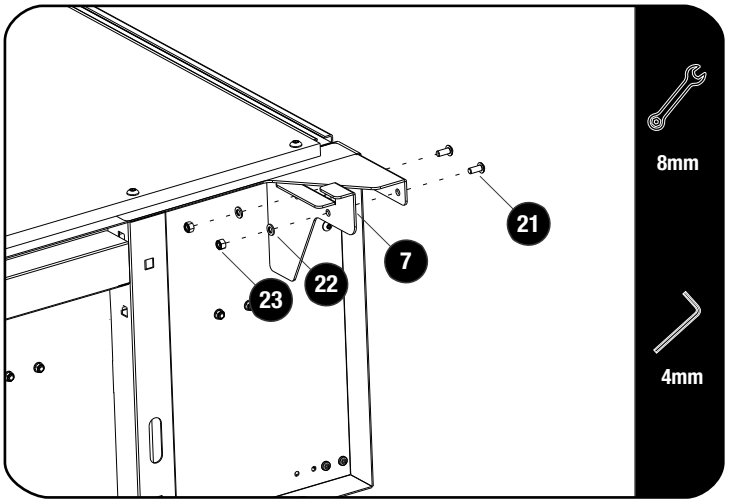

Secure the Left and Right Rear Wings (Item 6 & 7) to the Wing Brackets fitted in 2.6 using four M5 x12 Button Head Bolts, four M5 Flat Washers and four M5 Nyloc Nuts (Items 21, 22, 23) as shown.

2.11

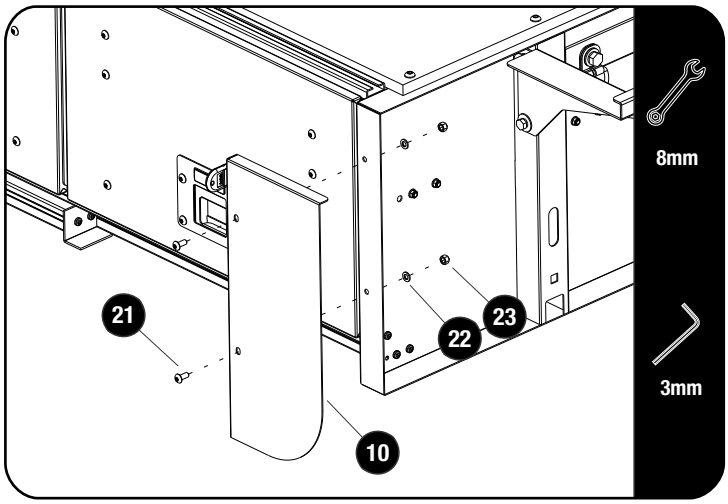

Secure the Left and Right Front Faces (Item 10) to the Drawer System using four M5 x 12 Button HeadBolts, four M5 Flat Washers and four M5 Nyloc Nuts (Items 21, 22, 23) as shown.

2.12

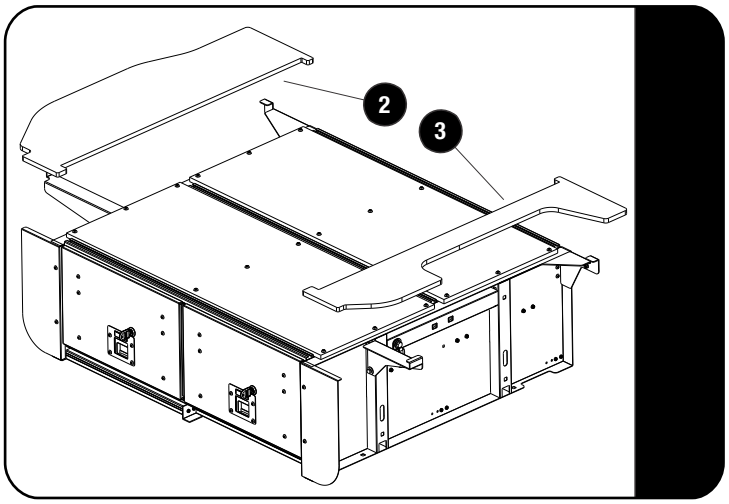

Fit the Side Decks (Items 2 & 3) to the Drawer by placing them into the C-Clips and pushing downward.

If your vehicle is fitted with the Rockford Shound system, use the Left Hand Side Deck (Item 1).

 © 2020 FRONT RUNNER VEHICLE OUTFITTERS

3

FINISH

Congratulations! You did it. Take a step back and admire your work!

4

INSTALL OTHER VEHICLE AND RACK ACCESSORIES

Now's the time to visit your favorite Front Runner Dealer in person or online.

Be sure to tag us. We love to see our gear in action! #FrontRunnerOutfitters #BornToRoam

Share your adventures on:

© 2020 FRONT RUNNER VEHICLE OUTFITTERS