FRONT RUNNER
VEHICLE OUTFITTERS

DECK COMPLETION SET

NISSAN NAVARA D23

ENG

SSDS503

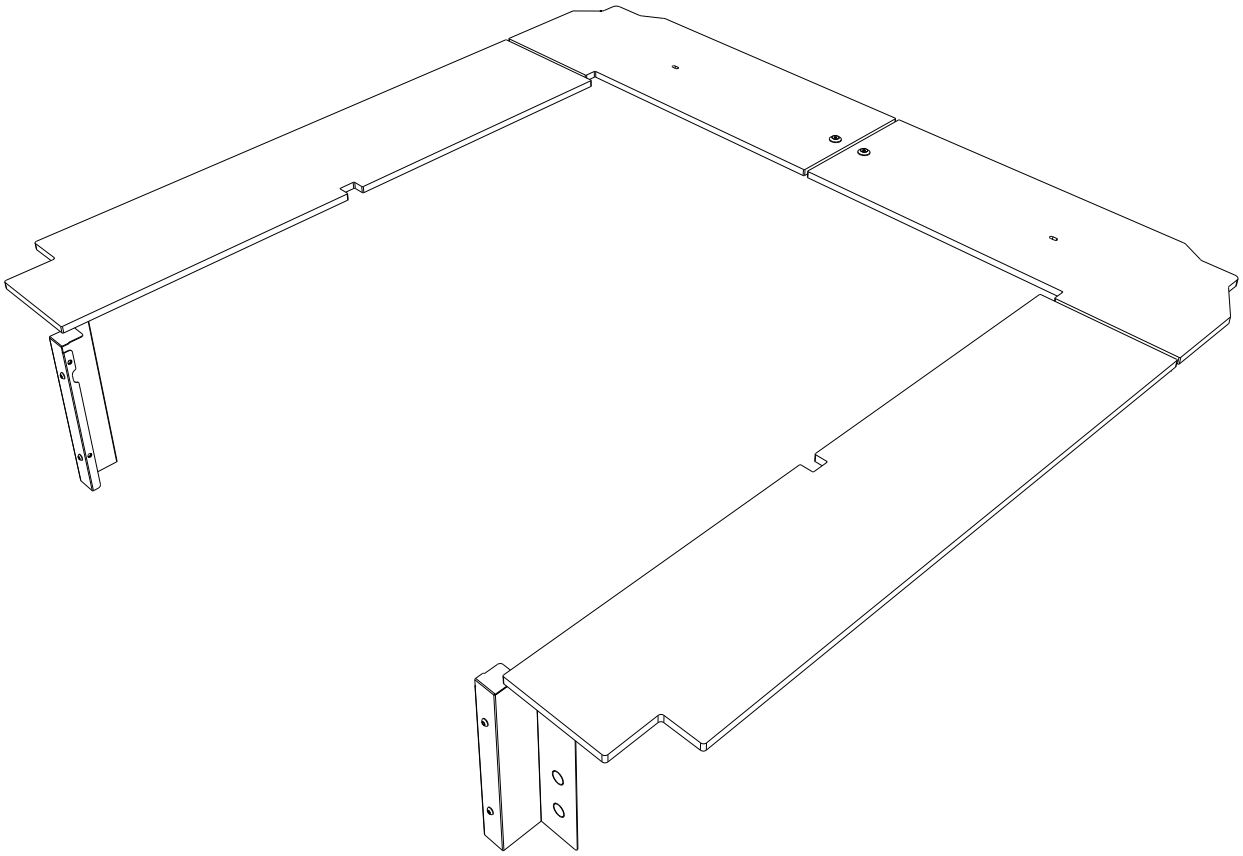

READ ME !

Thank you for purchasing a Front Runner Deck Completion Set.

Before you start, take a moment to familiarize yourself with the Fitting Instructions and the components received.

Refer to Page 2 for a list of all the components, quantities and tools required.

NOTE: Front Runner will not be responsible for any damage caused by the failure to install the product according to these instructions. Please cal us if you have any questions about the installation of this product.

IMPORTANT WARNING!

FRONT RUNNER CAN NOT RECOMMEND A MAXIMUM LOAD CARRYING CAPACITY. PLEASE REFER TO YOUR VEHICLE MANUFACTURER'S RECOMMENDATIONS. IT IS CRITICAL THAT ALL FRONT RUNNER PRODUCTS BE PROPERLY AND SECURELY ASSEMBLED AND ATTACHED TO YOUR VEHICLE. IMPROPER ATTACHMENT COULD RESULT IN AN AUTOMOBILE ACCIDENT, AND COULD CAUSE SERIOUS BODILY INJURY OR DEATH. YOU ARE RESPONSIBLE FOR ASSEMBLING AND SECURING ALL FRONT RUNNER PRODUCTS TO YOUR VEHICLE. CHECKING THE ATTACHMENTS PRIOR TO USE, AND PERIODICALLY INSPECTING THE PRODUCTS FOR ADJUSTMENT, WEAR AND DAMAGE. THEREFORE YOU MUST READ AND UNDERSTAND ALL OF THE INSTRUCTIONS AND PRECAUTIONS SUPPLIED WITH YOUR FRONT RUNNER PRODUCT PRIOR TO INSTALLATION OR USE. IF YOU DO NOT UNDERSTAND ALL OF THE INSTRUCTIONS AND CAUTIONS, OR IF YOU HAVE NO MECHANICAL EXPERIENCE AND ARE NOT THOROUGHLY FAMILIAR WITH THE INSTALLATION PROCEDURES, YOU SHOULD HAVE THE PRODUCT INSTALLED BY A PROFESSIONAL INSTALLER OR OTHER QUALIFIED PERSONNEL.

© COPYRIGHT 2018 FRONT RUNNER VEHICLE OUTFITTERS

1 GET ORGANIZED

IN THE BOX

1	2 X	Side Deck LH + RH
2	2 X	Rear Deck LH + RH
3	2 X	Front Face LH + RH
4	4 X	M6 x 16 Button Head
5	4 X	M6 x 12 x 1SS Flat Washer
6	4 X	M6 Nyloc Nut
7	2 X	M6 Finishing Washer
8	2 X	M6 x 35 Countersunk Bolt
9	4 X	60mm Carabiner

TOOLS NEEDED

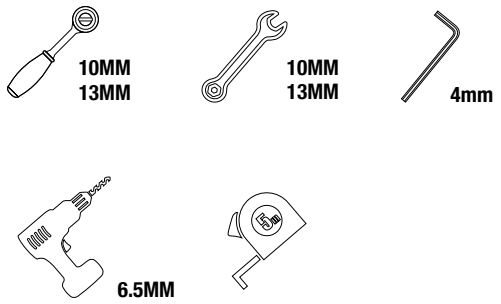

FIGURE 1.1

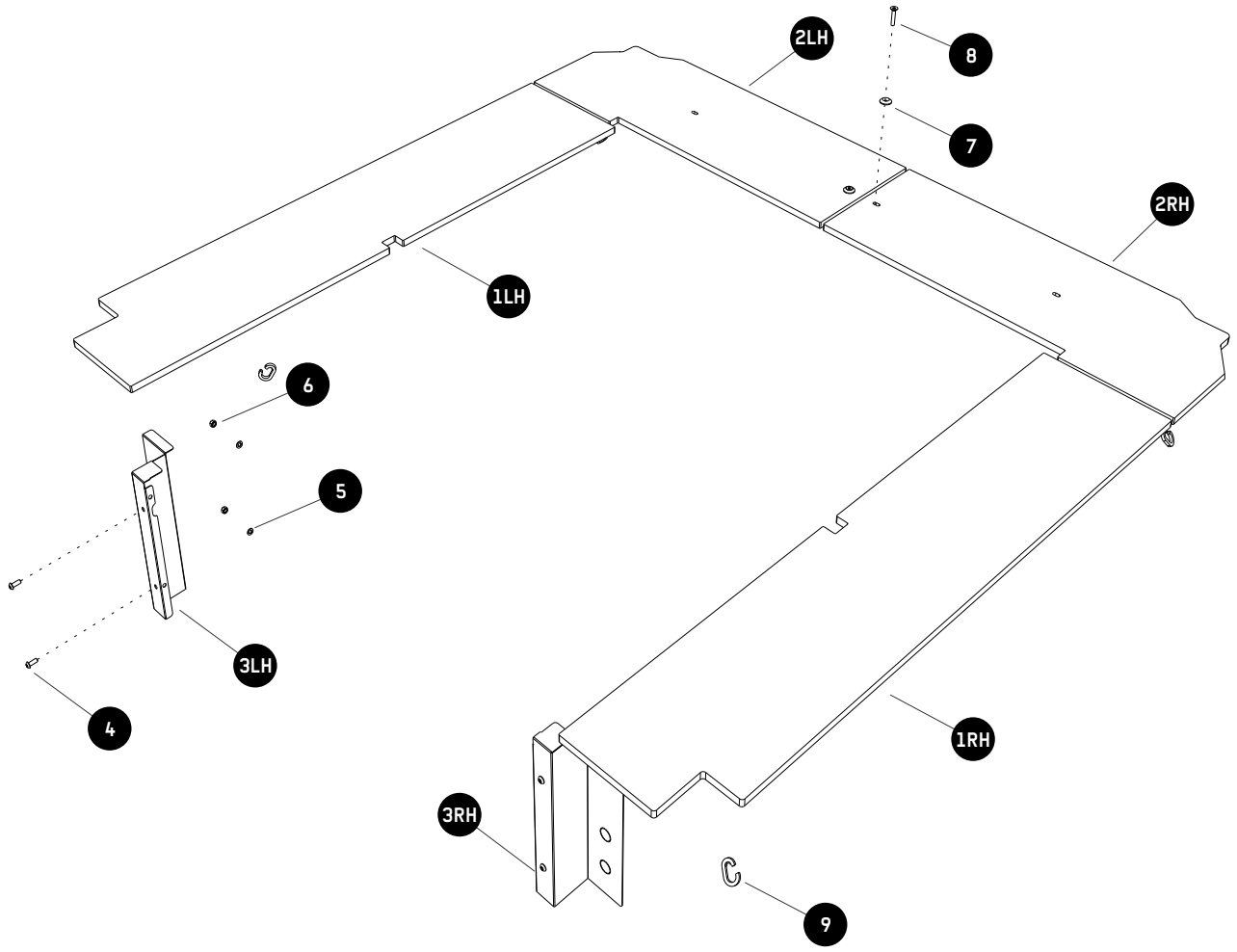

 © COPYRIGHT 2018 FRONT RUNNER VEHICLE OUTFITTERS

2 FIT AND SECURE

2.1

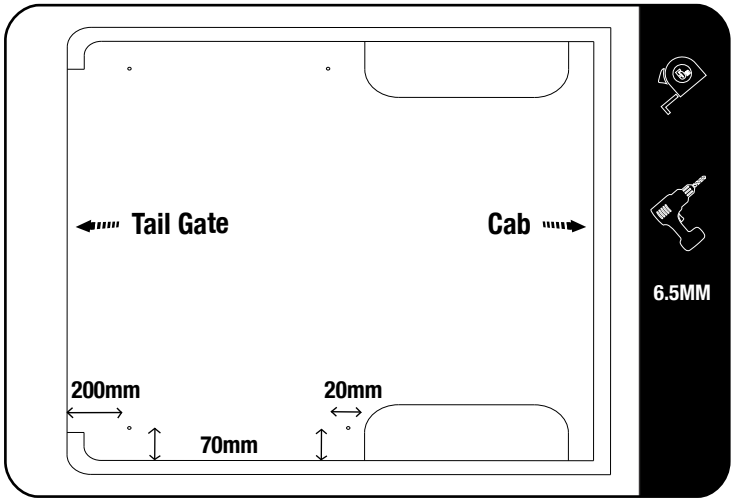

Using the measurements shown, measure and mark the positions of the holes you need to drill. Do this on both left and right sides of the load bed.

Drill 6.5mm holes on the markings you just made.

2.2

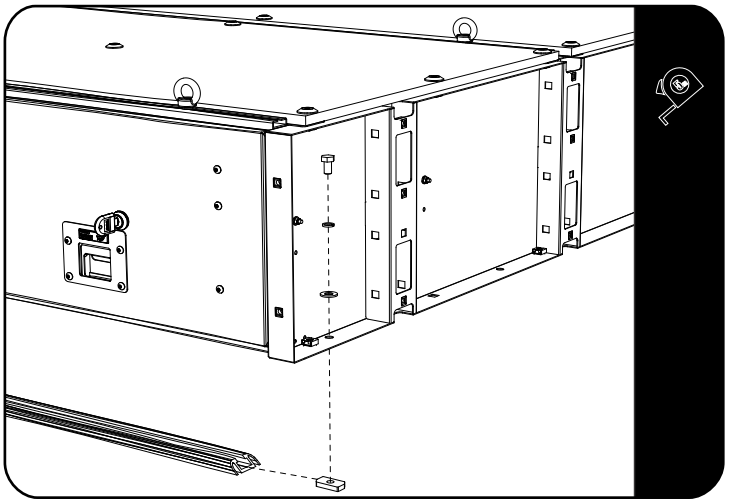

Slide two channel nuts (supplied with SSDR010 / SSWO008) into the track. Center the track under the drawer and secure with the fasteners as shown. Refer to SSDR010 / SSWO008 fitting instruction.

Place the Drawer System in the load bed. Center the Drawer System left to right and space it 25mm from the rear of the load bed.

2.3

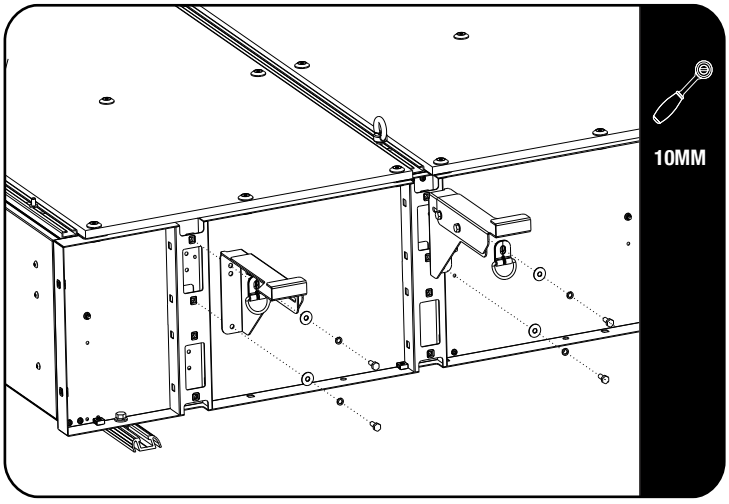

Refer to the SSWS001 Fitting Instructions to assemble the Wing Brackets before you start to fit them to the Drawer.

After you have assembled the Wing Brackets (SSWS001), fit them to the Drawer System as shown.

Use the fasteners supplied with SSWS001. Do the same on both sides of the Drawer System.

© COPYRIGHT 2018 FRONT RUNNER VEHICLE OUTFITTERS

2 FIT AND SECURE

2.4

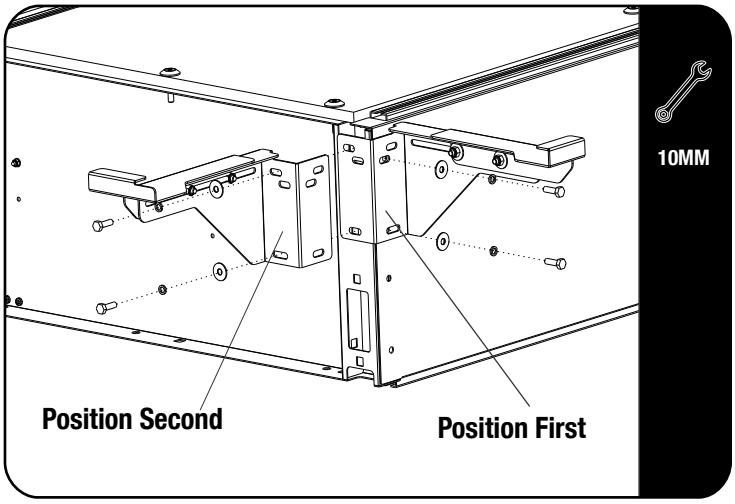

When fitting the Rear Corner Wing Brackets take note of the position.

Use the fasteners supplied with SSWS001 to secure the Wing Brackets to the Drawer System as shown.

Repeat this on the other rear corner of the Drawer System.

2.5

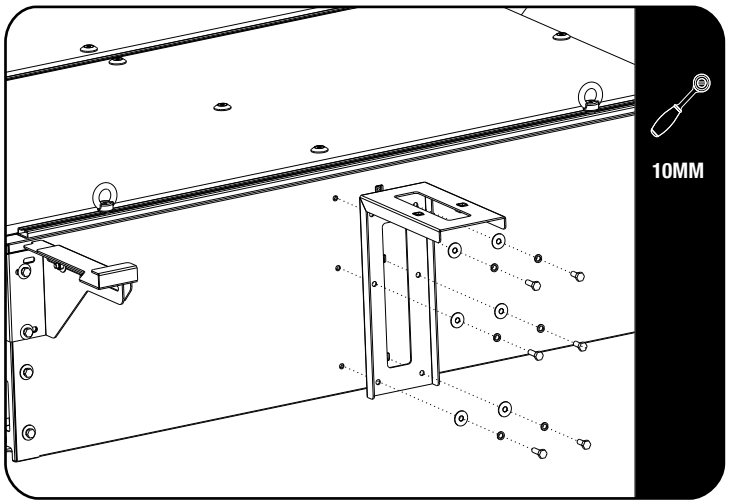

The Rear Support Bracket is also part of SSWS001. Fit and secure with the fasteners supplied with SSWS001 as shown.

2.6

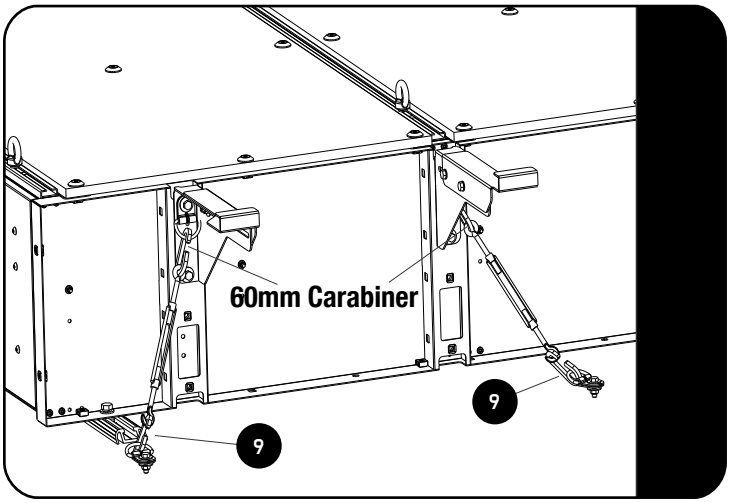

Secure the D-Rings supplied with SSDR010/SSWO008 using the holes you drilled in Step 2.1.

Use the Turnbuckles and 60mm Carabiners supplied with SSDR010/SSWO008 to secure the System to the load bed as shown.

Tighten the Wing Nuts to prevent the Turnbuckles from coming loose.

© COPYRIGHT 2018 FRONT RUNNER VEHICLE OUTFITTERS

2 FIT AND SECURE

Securing Front Faces To SSDR010

2.7

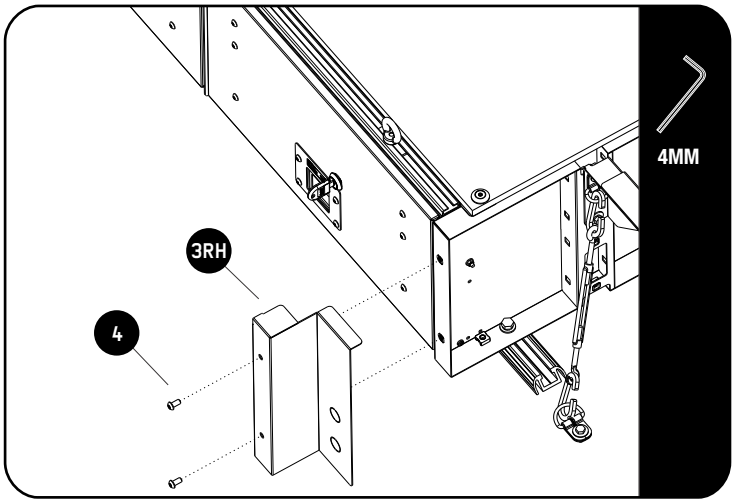

Secure the Front Faces (Item 3LH & 3RH) to the Cage Nuts in the Drawer System (SSDR010) using M6 x 12 Button Heads (Item 4) as shown.

Repeat this on the other side of the drawer.

Securing Front Faces To SSWS008

2.8

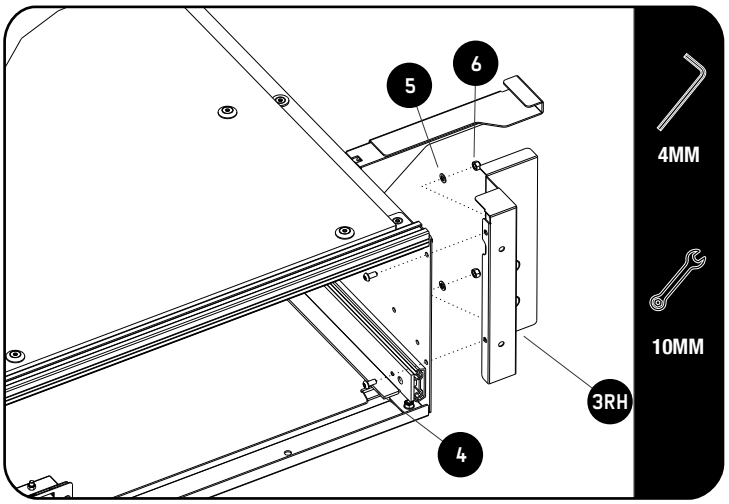

2.9

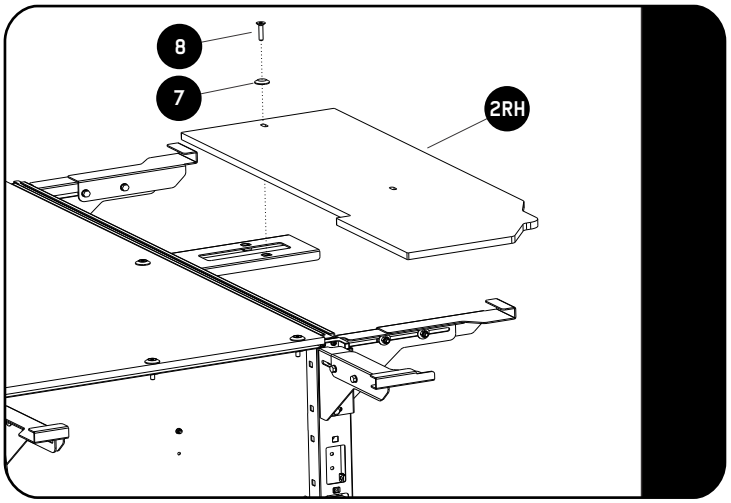

Fit the LH & RH Rear Decks (Items 2LH & 2RH) with M6 x 30 Countersink Screws and M6 Finishing Washers (Items 7 & 8) as shown.

© COPYRIGHT 2018 FRONT RUNNER VEHICLE OUTFITTERS

2 FIT AND SECURE

2.10

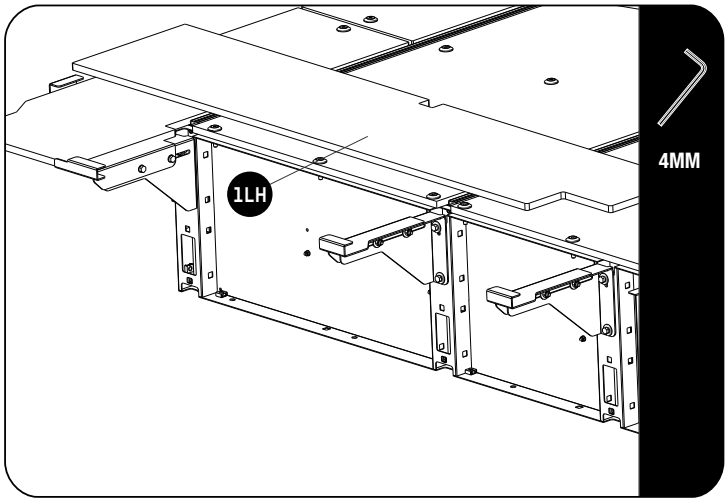

Fit the Side Decks (Items 1LH & 1RH) to the Drawer by sliding it into the C-Clips.

2.11

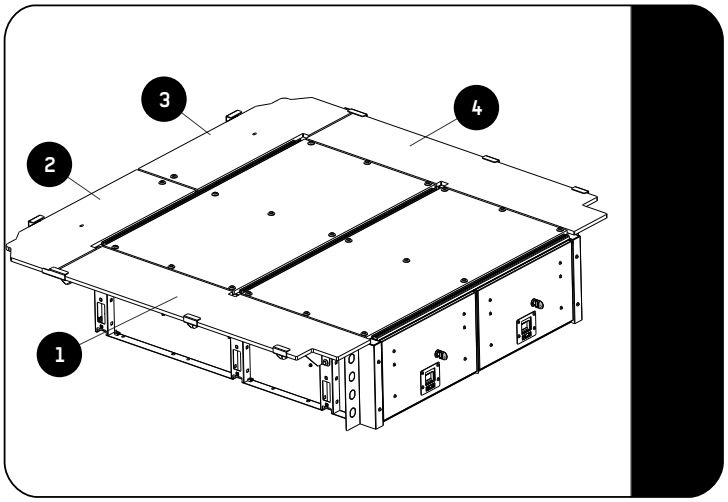

Position of all four Decks.

 © COPYRIGHT 2018 FRONT RUNNER VEHICLE OUTFITTERS

3 COMPLETION

3.1

Congratulations! You did it. Take a step back and admire your work!

4 INSTALL OTHER VEHICLE AND RACK ACCESSORIES

Now's the time to visit your favorite Front Runner Dealer in person or Online.

Be sure to tag us. We love to see our gear in action! #FrontRunnerOutfitters #BornToRoam

Share your adventures on:

© COPYRIGHT 2018 FRONT RUNNER VEHICLE OUTFITTERS