FRONT RUNNER

DRAWER
NISSAN NARVARA

ENG

SSDS501 / SSNN001

INSTALL TIME: 1 Hour

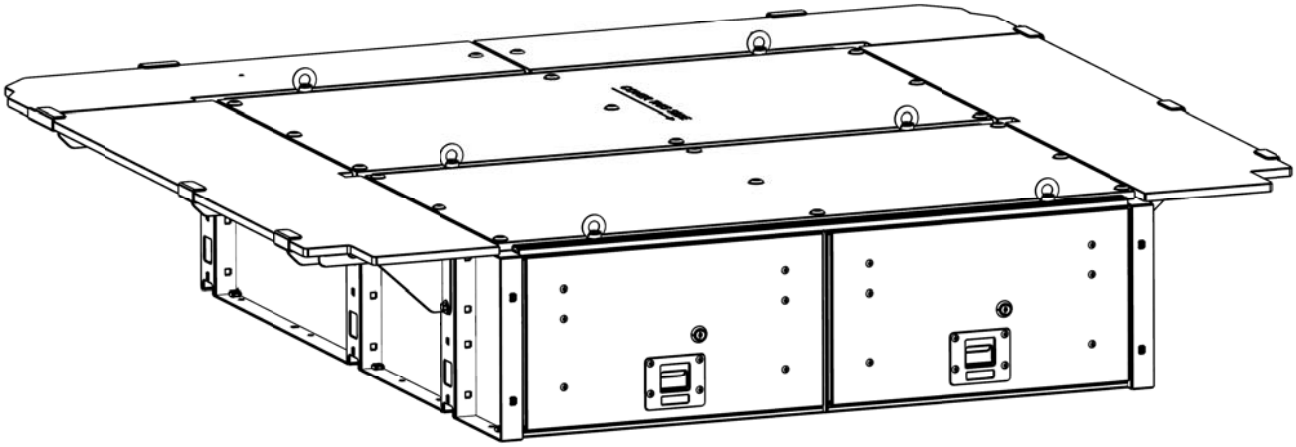

Thank you for purchasing a Front Runner Storage System.

This Storage System is made up of the following components:
1. A Drawer System - SSDR010
2. A Deck Support System - SSWS001
3. A Vehicle Specific Deck Set - SSDS501

Before you start, take a moment to familiarize yourself with these Fitting Instructions and all the components received. Depending on the vehicle not all components received will be used. Refer to Pages 2 & 3 for a list of all the components and quantities of required.

IMPORTANT WARNING!

IT IS CRITICAL THAT ALL FRONT RUNNER PRODUCTS BE PROPERLY AND SECURELY ASSEMBLED AND ATTACHED TO YOUR VEHICLE. IMPROPER ATTACHMENT COULD RESULT IN AN AUTOMOBILE ACCIDENT, AND COULD CAUSE SERIOUS BODILY INJURY OR DEATH TO YOU OR TO OTHERS. YOU ARE RESPONSIBLE FOR ASSEMBLING AND SECURING ALL FRONT RUNNER PRODUCTS TO YOUR VEHICLE, CHECKING THE ATTACHMENTS PRIOR TO USE, AND PERIODICALLY INSPECTING THE PRODUCTS FOR ADJUSTMENT, WEAR, AND DAMAGE. THEREFORE, YOU MUST READ AND UNDERSTAND ALL OF THE INSTRUCTIONS AND CAUTIONS SUPPLIED WITH YOUR FRONT RUNNER PRODUCT PRIOR TO INSTALLATION OR USE. IF YOU DO NOT UNDERSTAND ALL OF THE INSTRUCTIONS AND CAUTIONS, OR IF YOU HAVE NO MECHANICAL EXPERIENCE AND ARE NOT THOROUGHLY FAMILIAR WITH THE INSTALLATION PROCEDURES, YOU SHOULD HAVE THE PRODUCT INSTALLED BY A PROFESSIONAL INSTALLER OR OTHER QUALIFIED PERSONNEL.

© COPYRIGHT 2015 FRONT RUNNER VEHICLE OUTFITTERS

1 GET ORGANIZED...

Here is what you are looking at for SSDR010:

Item #	Quantity	Description
1	1	TWIN DRAWER STORAGE SYSTEM
2	4	TURNBUCKLE
3	4	WING NUT
4	4	D-RING
5	4	M6 x 20 HEX BOLT
6	4	M6 SPRING WASHER
7	4	M6 x 19 FLAT WASHER
8	6	EYE NUT
9	6	STUD PLATE
10	6	NYLON WASHER
11	2	M8 x 16 HEX BOLT
12	2	M8 CHANNEL NUT
13	2	M8 x 25 FLAT WASHER
14	2	M8 SPRING WASHER
15	1	TRACK

You will need:

- ☐ 10 mm Flat & Socket Wrench
- ☐ 4 mm Hex Key
- ☐ a Friend
- ☐ Measuring Tape
- ☐ Drill Machine
- ☐ 6.5 mm Drill Bit
- ☐ Suitable Marker

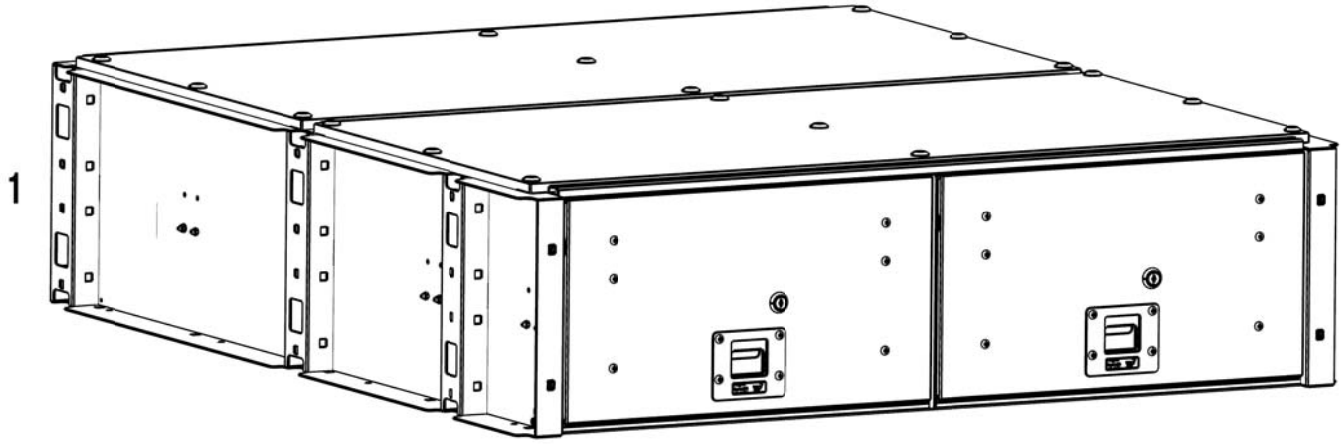

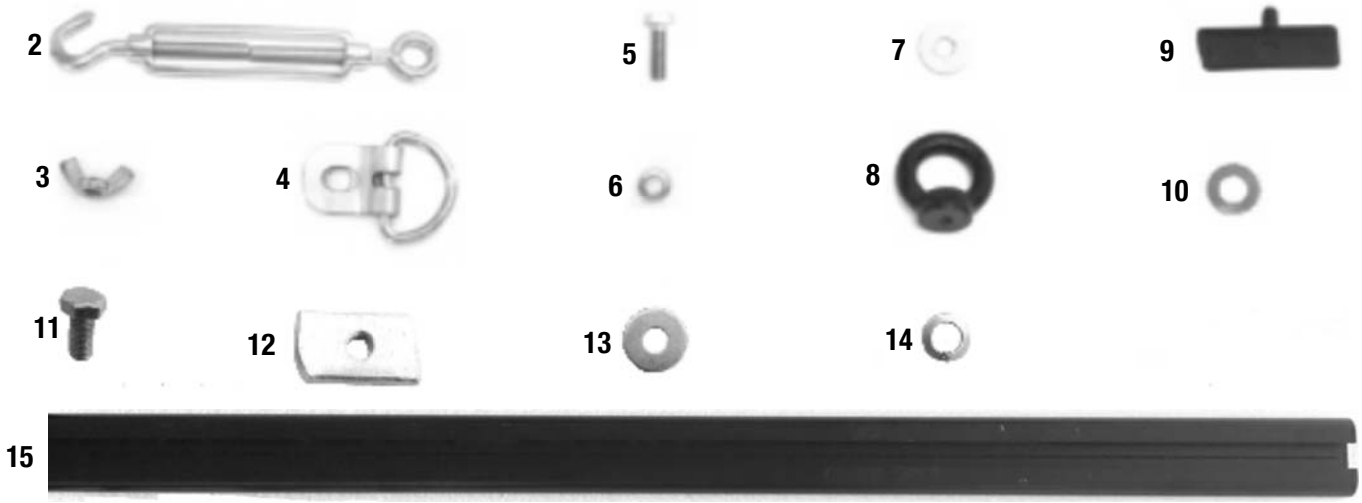

© COPYRIGHT 2015 FRONT RUNNER VEHICLE OUTFITTERS

1 GET ORGANIZED CONT...

Here is what you are looking at for SSWS001:

Item #	Quantity	Description
16	16	M6 x 16 HEX BOLT
17	27	M6 x 19 FLAT WASHER
18	11	M6 SPRING WASHER
19	16	M6 NYLOC NUT
20	16	M6 FLAT WASHER
21	11	M6 x 20 HEX BOLT
22	1	REAR SUPPORT
23	4	CORNER WING - 2 LEFT, 2 RIGHT
24	6	WING SLIDER TYPE 1 - 3 LEFT, 3 RIGHT
25	2	WING SLIDER TYPE 2 - 1 LEFT, 1 RIGHT
26	4	SIDE WING - 2 LEFT, 2 RIGHT

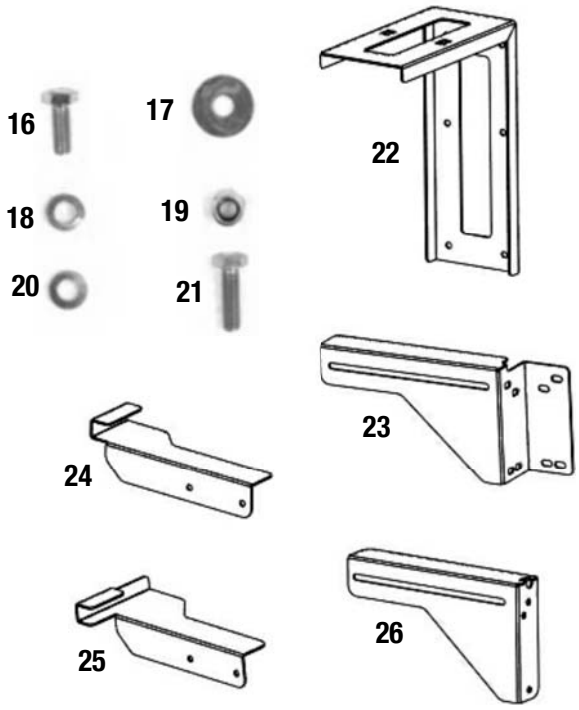

Here is what you are looking at for SSDS501:

Item #	Quantity	Description
27	1	FRONT LEFT DECK
28	1	REAR LEFT DECK
29	1	REAR RIGHT DECK
30	1	FRONT RIGHT DECK
31	4	D-RING
32	4	M6 x 25 HEX BOLT
33	8	M6 x 19 FLAT WASHER
34	4	M6 NYLOC NUT
35	4	37mm C-HOOK
36	2	M6 x 25 COUNTERSUNK BOLT
37	2	M6 FINISHING WASHER
38	1	LEFT HAND FRONT FACE
39	1	RIGHT HAND FRONT FACE
40	4	M6 x 16 BUTTON HEAD BOLT

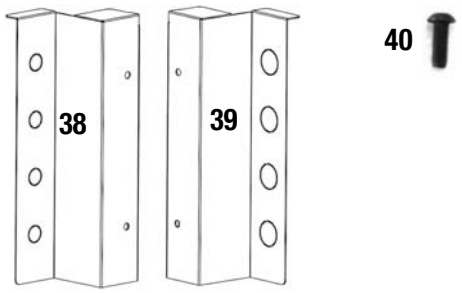

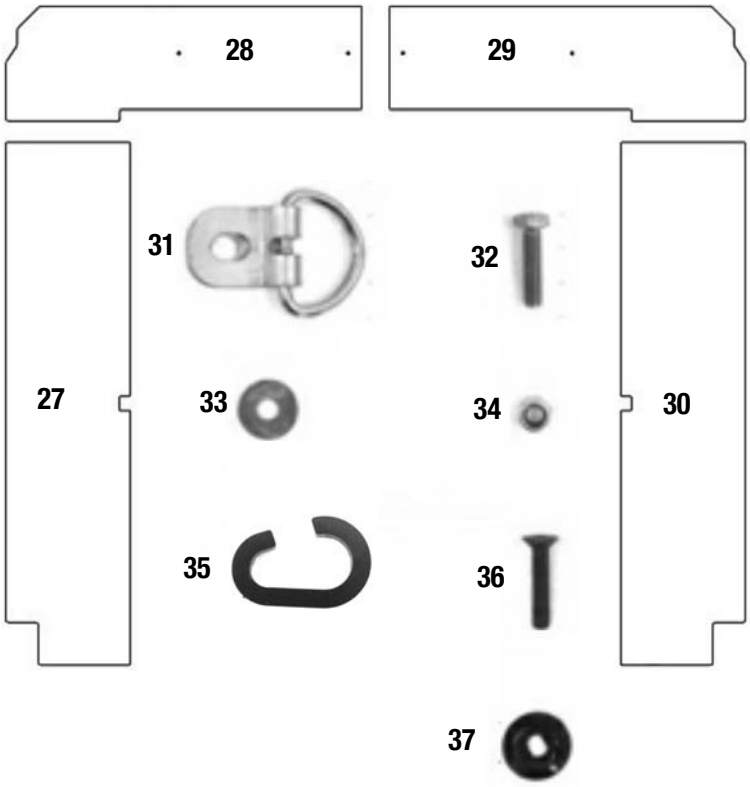

© COPYRIGHT 2015 FRONT RUNNER VEHICLE OUTFITTERS

2 PREPARE FOR INSTALLATION

(A) **Loosely assemble the left and right hand Side Wing Sets (Items 24, 26) as shown below using two M6 x 16 Hex Bolts, two M6 Flat Washers, two M6 x 19 Flat Washers and two M6 Nyloc Nuts as shown (Items 16, 17, 19, 20) received with SSWS001.**

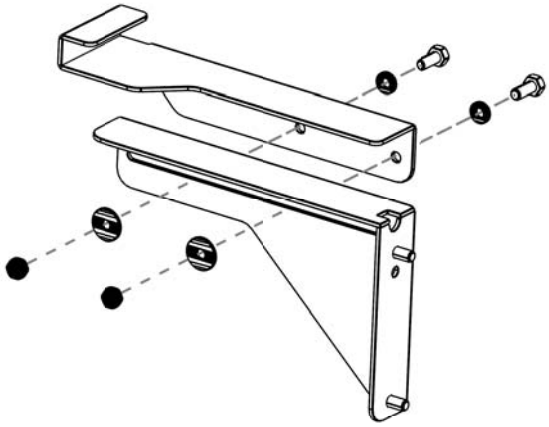

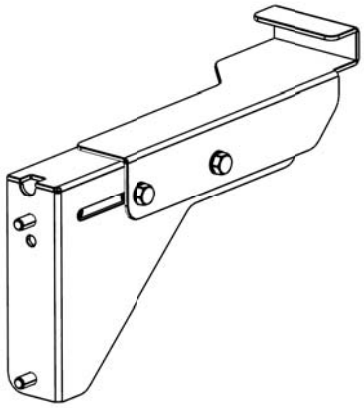

(B) **Using Step 2A as a guide, loosely assemble the Corner Wings (Items 23, 24, 25) as shown.**

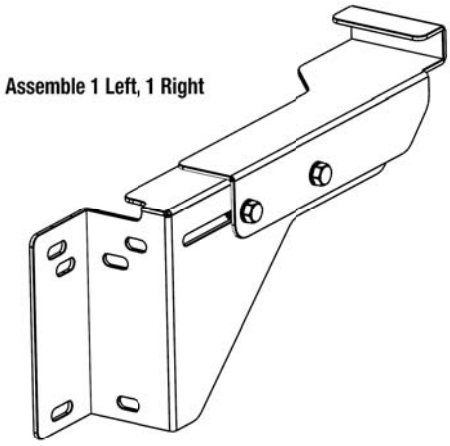

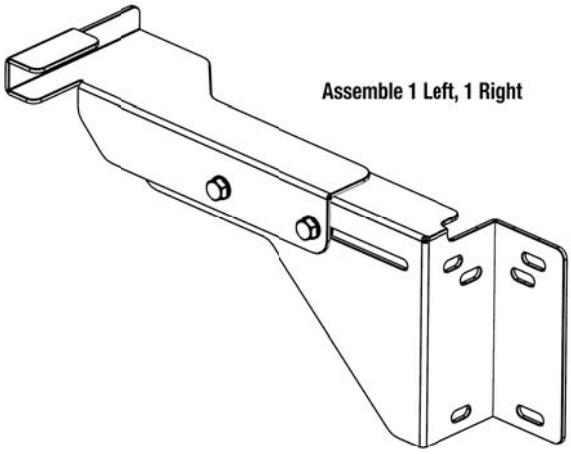

(C) **Loosen the round end of the four Turn Buckles (Item 2) supplied with SSDR010. Screw a M6 Wing Nut (Item 3) onto each round end and reassemble the Turn Buckles as shown.**

© COPYRIGHT 2015 FRONT RUNNER VEHICLE OUTFITTERS

2 PREPARE FOR INSTALLATION CONT...

(D) **Slide a Channel Nut (Item 12) into each end of the Track (Item 15). Place the Track under the front of the Drawer System and line the Channel Nuts in the Track up with the mounting holes in the front corners of the Drawer System. Loosely secure the Track to the Drawer System using the two M8 x 16 Hex Bolts, two M8 x 25 Flat Washers and two M8 Springs Washers (Items 11, 13 14). Center the Track from left to right and fasten.**

(E) **Looking at the rear of the Drawer System, remove the bolts as indicated by the arrows. Keep the bolts and washers safe as they will be used at a later stage.**

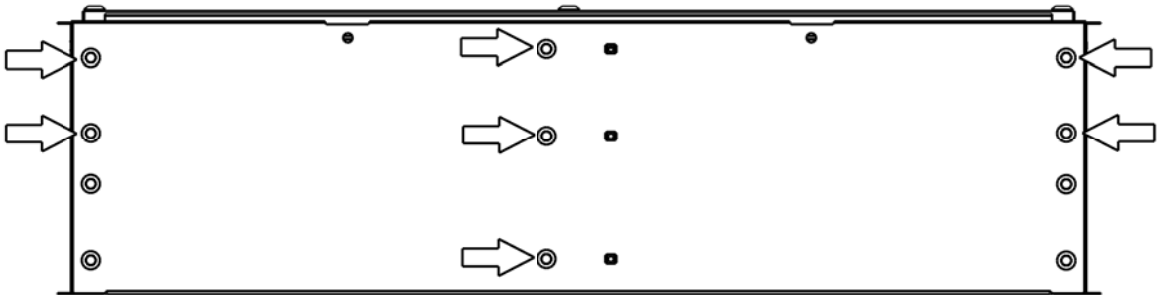

(F) **Using six M6 x 20 Hex Hex Bolts, six M6 Spring Washers and six M6 x 19 Flat Washers removed in Step 2E, secure the Rear Support (Item 22) to the back of the Drawer System as shown.**

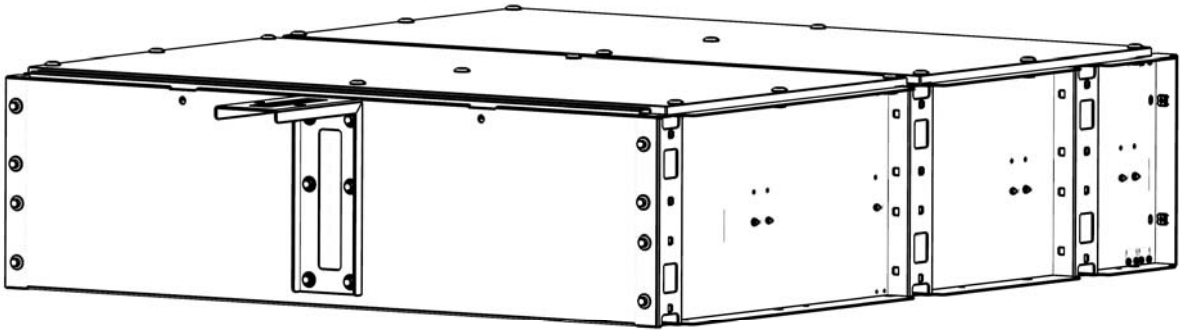

© COPYRIGHT 2015 FRONT RUNNER VEHICLE OUTFITTERS

2 PREPARE FOR INSTALLATION CONT...

(G) **Reffering to the diagram below, mark out the vehicle's load bay and drill a 6.5mm on each of your four markings.**

© COPYRIGHT 2015 FRONT RUNNER VEHICLE OUTFITTERS

2 PREPARE FOR INSTALLATION CONT...

(H) **Using the components received with SSDS501, secure the four D-ring's (Item 31) to the inside of the Load Bay. You will be bolting through each of the holes drilled in Step 2G using a M6 x 25 Hex Bolt, two M6 x 19 Flat Washers and a M6 Nyloc Nut per D-ring (Items 32, 33, 34) as shown.**

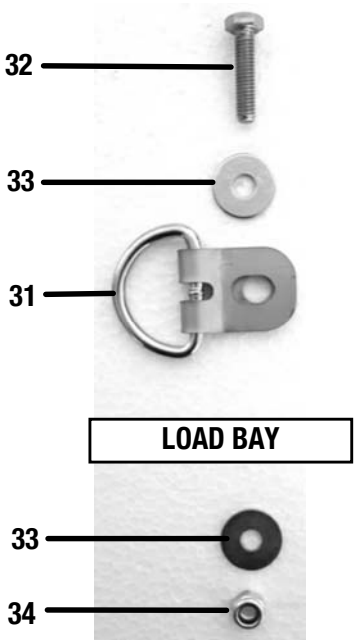

(I) **Remove the four tie down hooks from the vehicle's loadbay.**

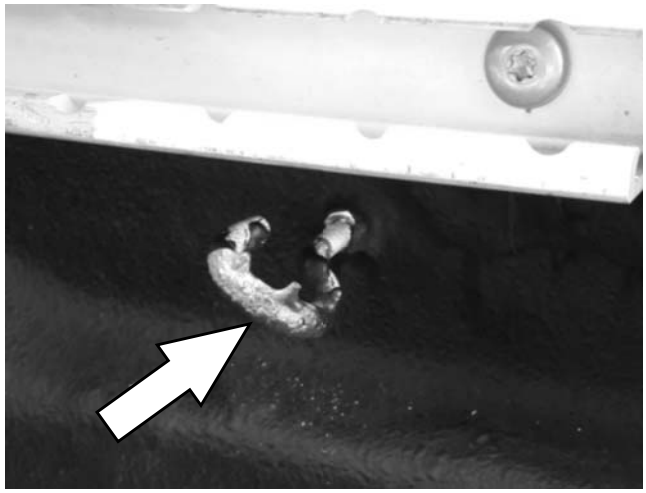

© COPYRIGHT 2015 FRONT RUNNER VEHICLE OUTFITTERS

3 INSTALL DRAWER SYSTEM

(A) **Lift the Drawer System (Item 1) into the vehicle's load bay and position it 50 mm in from the front of the load bay and center it from left to right.**

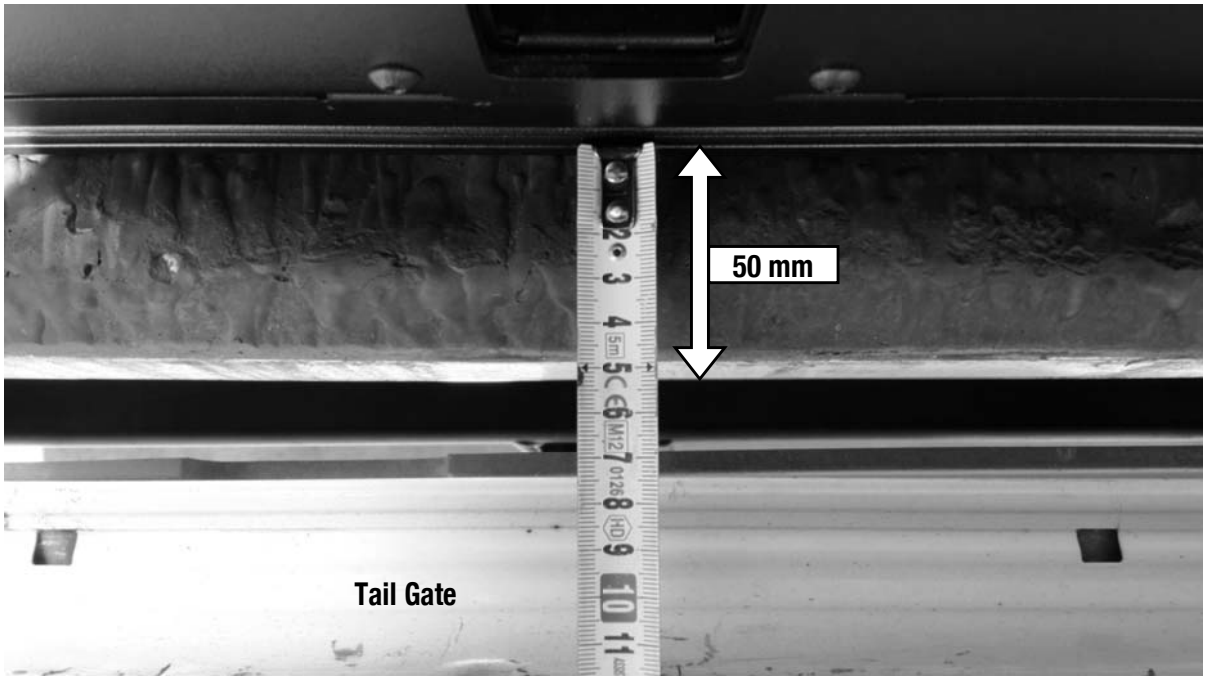

(B) **Secure the Side Wing Assemblies from Step 2A to the Drawer System using six M6 x 20 Hex Bolts, six M6 Spring Washers and six M6 Flat Washers (Items 17, 18, 21) received with SSW0001.**

When Securing the TOP mounting of the FRONT Wing Assemblies, loosely secure a D-ring (Item 4) to the Drawer and Wing Assembly using a M6 x 20 Hex Bolt, M6 Spring Washer and M6 x 19 Flat Washer (Item 5, 6, 7) received with SSDR010 as shown.

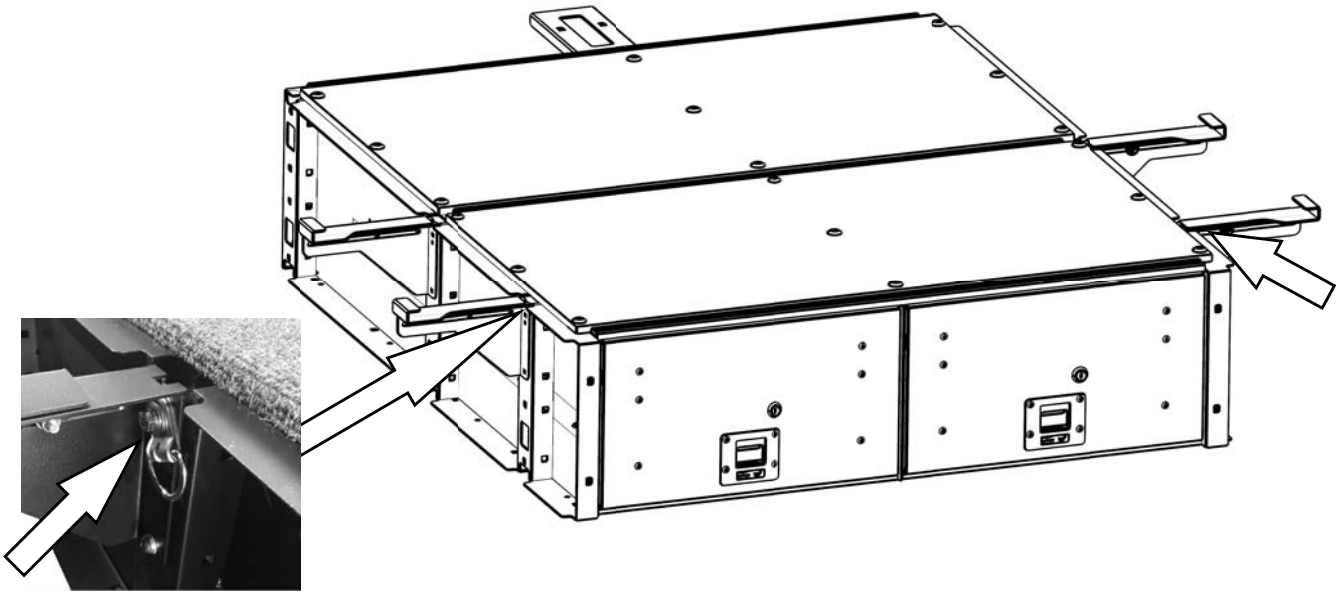

© COPYRIGHT 2015 FRONT RUNNER VEHICLE OUTFITTERS

3 INSTALL DRAWER SYSTEM CONT...

(C) **Position the Corner Wing Assemblies from Step 2B over the rear corners of the Drawer as shown. Secure the Assemblies to the Drawer using the remaining M6 x 20 Hex Bolts, M6 x 19 Flat Washers and M6 Spring Washers. As in Step 3B, secure a D-Ring (Item 4) to each of the rear corners as shown.**

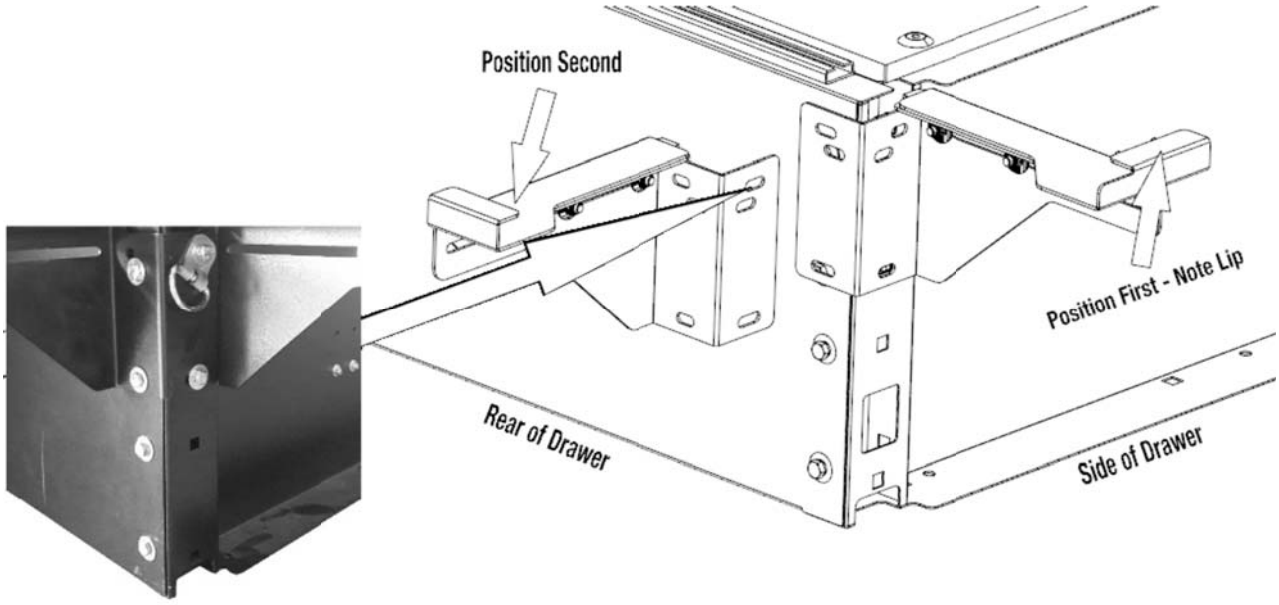

(D) **Secure the front and rear of the Drawer System to the vehicle using the 37 mm C-hooks and Turnbuckles (Items 2 & 35) as shown below. Ensure Drawer remains centered, left to right, and 50 mm in from the edge of the load bay (Refer to Step 3A).**

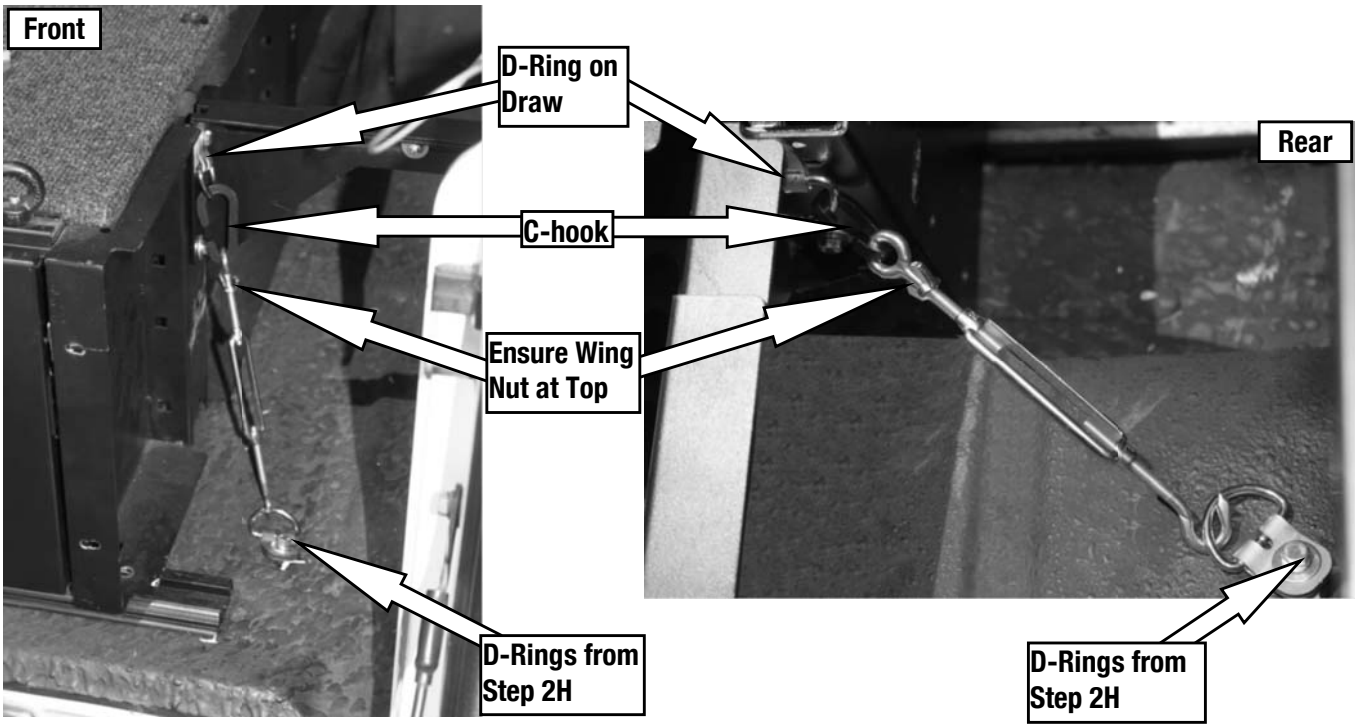

© COPYRIGHT 2015 FRONT RUNNER VEHICLE OUTFITTERS

3 INSTALL DRAWER SYSTEM CONT...

(E) Fit the Side and Rear Decks (Items 27, 28, 29, 30) into position, by "clipping" the outer edge of the Decks into the Wing Sliders (Items 24 & 25) and pushing the Decks towards the outside of the vehicle, thereby adjusting the Slider to the correct length. Once you are happy with the length of the Slider, carefully remove the Decks taking care not to move the Sliders and fasten the two bolts on each Slider, locking it into position.

(F) Secure the center of the Rear Decks to the Rear Support (Item 22) using the two M6 x 25 Countersunk Bolts and two M6 Finishing Washers (Items 36 & 37).

Assemble the two Front Faces (Items 38, 39) to the front of the Drawer System using the four M6 x16 Button Head Bolts (Item 40) supplied.

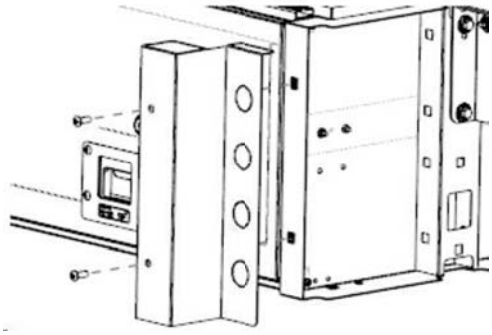

4 FITTING ELECTRICAL SOCKETS

(A)

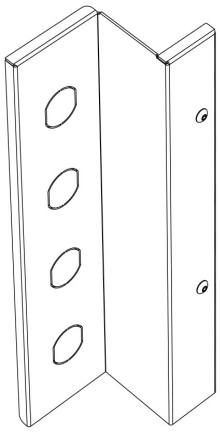

⚠ Twist the pre cut knock outs to remove. These cut outs can then be used to fit Front Runners range of electrical panel inserts.

(Sold Seperately)

ECOM117 - Amp Meter
ECOM118 - USB Socket
ECOM119 - 12/24V Socket
ECOM120 - Merit Socket
ECOM121 - Engel Socket
ECOM124 - Volt

© COPYRIGHT 2015 FRONT RUNNER VEHICLE OUTFITTERS

5 COMPLETION

(A)

Congratulations. You did it. Take a step back and admire your work!

6 Front Runner will not be responsible for any damage caused by the failure to install the product according to these instructions. Please call us if you have any questions about the installation of this product.

7 INSTALL OTHER VEHICLE AND RACK ACCESSORIES

Now's the time to visit your favorite Front Runner Dealer in person or Online.

Be sure to tag us. We love to see our gear in action! #FrontRunnerOutfitters #BornToRoam

Share your adventures on:

© COPYRIGHT 2015 FRONT RUNNER VEHICLE OUTFITTERS

FRONT RUNNER

DRAWER 6 BOX LARGE MKII
NISSAN NAVARA

ENG

SSDS501 / SWNN001

INSTALL TIME: 1 Hour

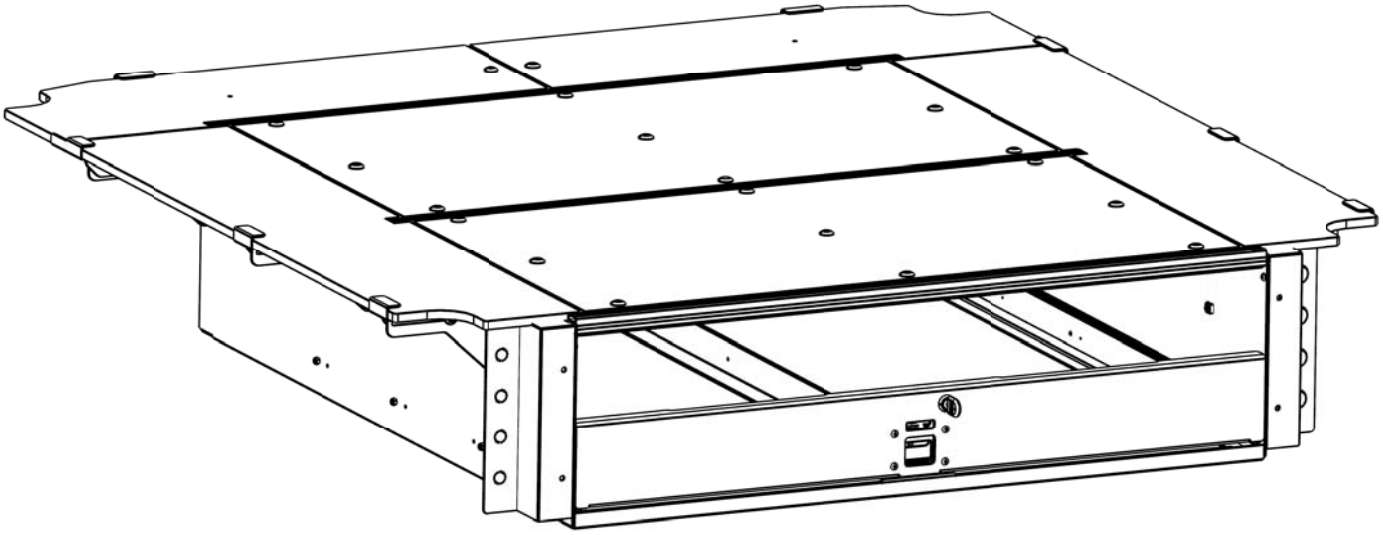

Thank you for purchasing a Front Runner Storage System.

This Storage System is made up of the following components:
1. A Large Box Drawer System - SSW0008
2. A Deck Support System - SSWS001
3. A Vehicle Specific Deck Set - SSDS501

Before you start, take a moment to familiarize yourself with these Fitting Instructions and all the components received. Depending on the vehicle not all components received will be used. Refer to Pages 2 & 3 for a list of all the components and quantities of required.

IMPORTANT WARNING!

IT IS CRITICAL THAT ALL FRONT RUNNER PRODUCTS BE PROPERLY AND SECURELY ASSEMBLED AND ATTACHED TO YOUR VEHICLE. IMPROPER ATTACHMENT COULD RESULT IN AN AUTOMOBILE ACCIDENT, AND COULD CAUSE SERIOUS BODILY INJURY OR DEATH TO YOU OR TO OTHERS. YOU ARE RESPONSIBLE FOR ASSEMBLING AND SECURING ALL FRONT RUNNER PRODUCTS TO YOUR VEHICLE, CHECKING THE ATTACHMENTS PRIOR TO USE, AND PERIODICALLY INSPECTING THE PRODUCTS FOR ADJUSTMENT, WEAR, AND DAMAGE. THEREFORE, YOU MUST READ AND UNDERSTAND ALL OF THE INSTRUCTIONS AND CAUTIONS SUPPLIED WITH YOUR FRONT RUNNER PRODUCT PRIOR TO INSTALLATION OR USE. IF YOU DO NOT UNDERSTAND ALL OF THE INSTRUCTIONS AND CAUTIONS, OR IF YOU HAVE NO MECHANICAL EXPERIENCE AND ARE NOT THOROUGHLY FAMILIAR WITH THE INSTALLATION PROCEDURES, YOU SHOULD HAVE THE PRODUCT INSTALLED BY A PROFESSIONAL INSTALLER OR OTHER QUALIFIED PERSONNEL.

© COPYRIGHT 2015 FRONT RUNNER VEHICLE OUTFITTERS

1 GET ORGANIZED...

Here is what you are looking at for SSW0008:

Item #	Quantity	Description
1	1	SIX BOX DRAWER SYSTEM
2	4	TURNBUCKLE
3	4	WING NUT
4	4	D-RING
5	4	M6 x 20 HEX BOLT
6	4	M6 SPRING WASHER
7	4	M6 x 19 FLAT WASHER
8	6	EYE NUT
9	6	STUD PLATE
10	6	NYLON WASHER
11	2	60 mm C-HOOK
12	1	M8 X 16 HEX BOLT
13	1	M8 CHANNEL NUT
14	1	M8 x 25 FLAT WASHER
15	1	M8 SPRING WASHER
16	1	TRACK

You will need:

- ☐ 10 mm Flat & Socket Wrench
- ☐ 4 mm Hex Key
- ☐ a Friend
- ☐ Measuring Tape
- ☐ Drill Machine
- ☐ 6.5 mm Drill Bit
- ☐ Suitable Marker

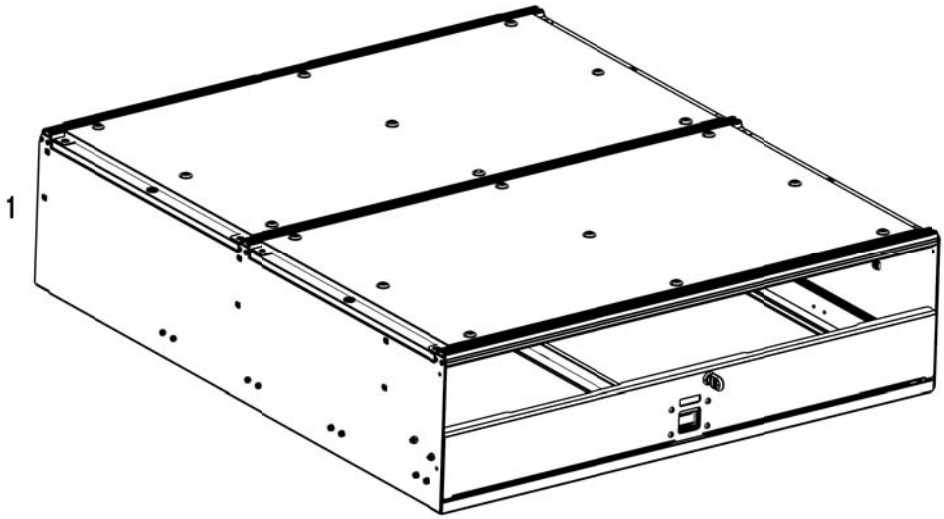

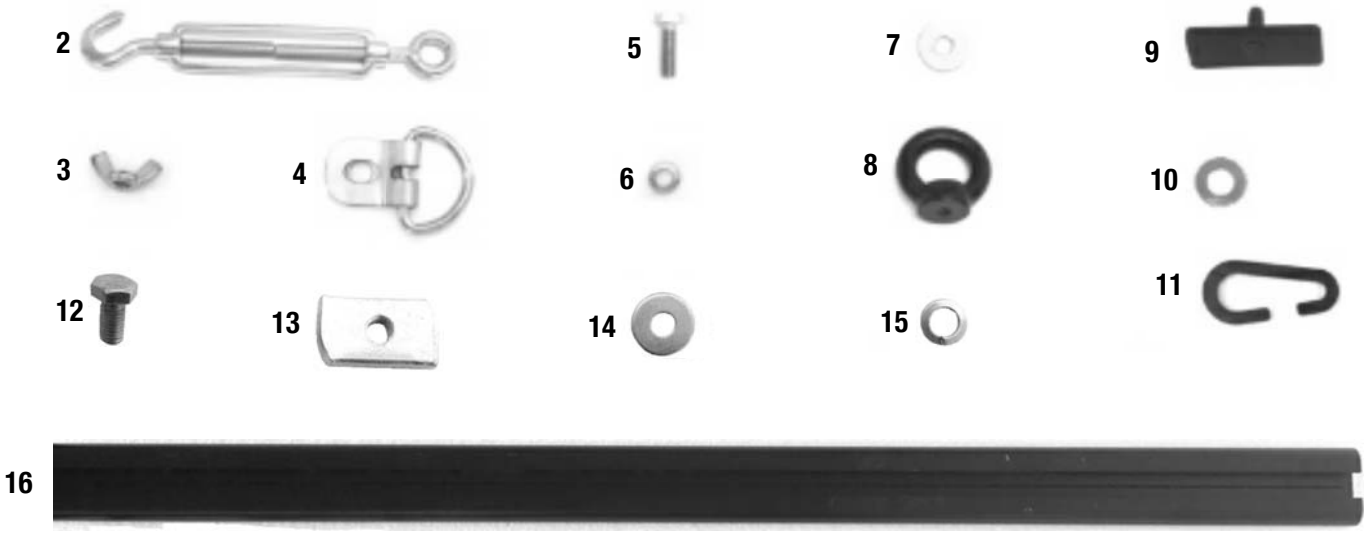

© COPYRIGHT 2015 FRONT RUNNER VEHICLE OUTFITTERS

1 GET ORGANIZED CONT...

Here is what you are looking at for SSWS001:

Item #	Quantity	Description
17	16	M6 x 16 HEX BOLT
18	26	M6 x 19 FLAT WASHER
19	10	M6 SPRING WASHER
20	16	M6 NYLOC NUT
21	16	M6 FLAT WASHER
22	10	M6 x 20 HEX BOLT
23	1	REAR SUPPORT
24	4	CORNER WING - 2 LEFT, 2 RIGHT
25	6	WING SLIDER TYPE 1 - 3 LEFT, 3 RIGHT
26	2	WING SLIDER TYPE 2 - 1 LEFT, 1 RIGHT
27	4	SIDE WING - 2 LEFT, 2 RIGHT

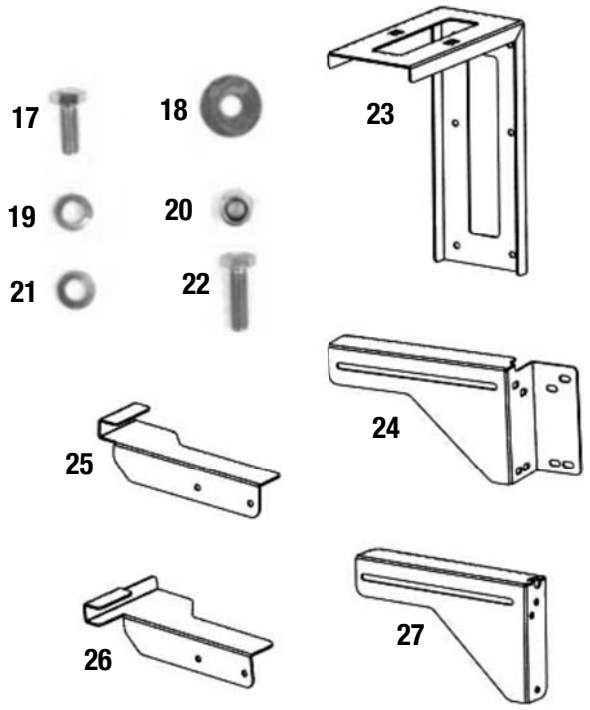

Here is what you are looking at for SSDS501:

Item #	Quantity	Description
28	1	FRONT LEFT DECK
29	1	REAR LEFT DECK
30	1	REAR RIGHT DECK
31	1	FRONT RIGHT DECK
32	4	D-RING
33	4	M6 x 25 HEX BOLT
34	8	M6 x 19 FLAT WASHER
35	8	M6 NYLOC NUT
36	4	37 mm C-HOOK
37	2	M6 x 25 COUNTERSUNK BOLT
38	2	M6 FINISHING WASHER
39	1	LEFT HAND FRONT FACE
40	1	RIGHT HAND FRONT FACE
41	4	M6 x 16 BUTTON HEAD BOLT
42	4	M6 FLAT WASHER

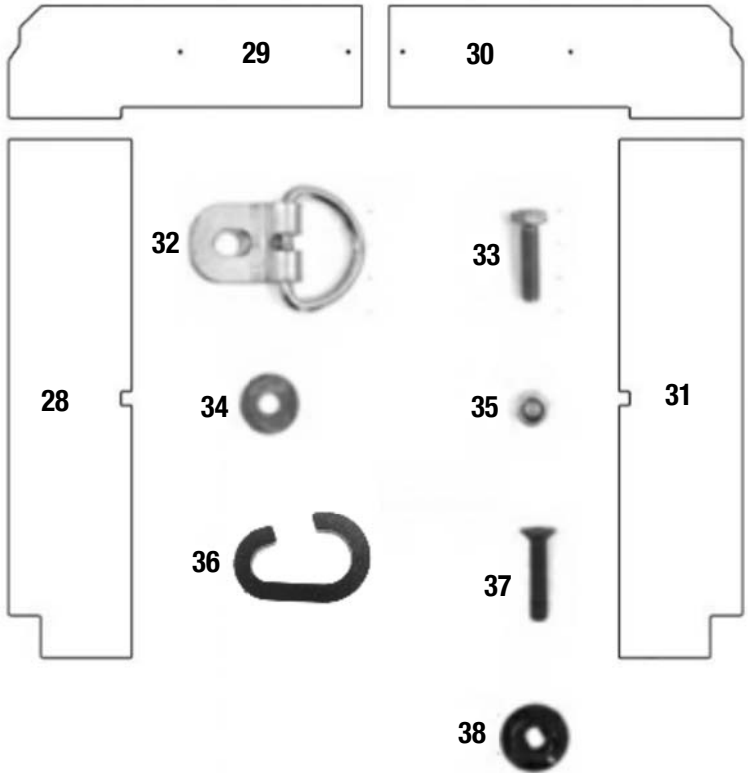

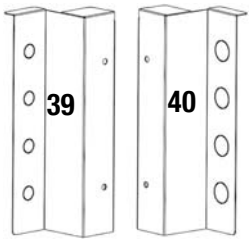

© COPYRIGHT 2015 FRONT RUNNER VEHICLE OUTFITTERS

2 PREPARE FOR INSTALLATION CONT...

(A) **Loosely assemble the left and right hand Side Wing Sets (Items 25, 27) as shown below using two M6 x 16 Hex Bolts, two M6 Flat Washers, two M6 x 19 Flat Washers and two M6 Nyloc Nuts as shown (Items 17, 18, 20, 21) received with SSWS001.**

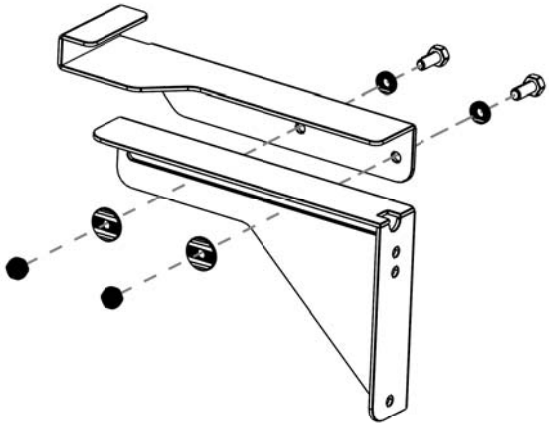

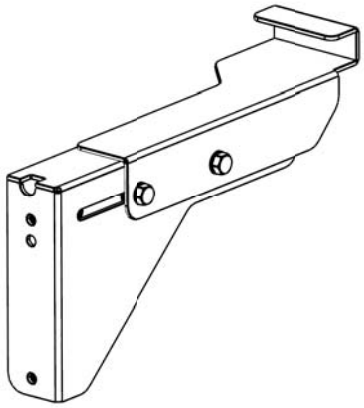

(B) **Using Step 2A as a guide, loosely assemble the Corner Wings (Items 24, 25, 26) as shown.**

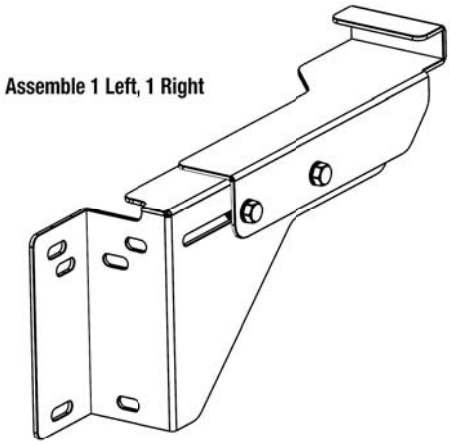

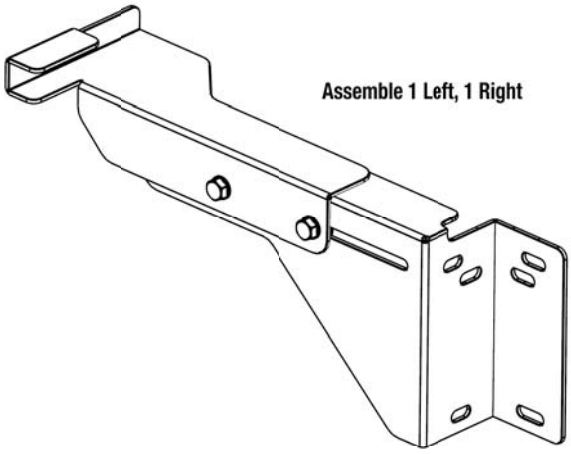

(C) **Loosen the round end of the four Turn Buckles (Item 2) supplied with SSWO008. Screw a M6 Wing Nut (Item 3) onto each round end and reassemble the Turn Buckle as shown.**

© COPYRIGHT 2015 FRONT RUNNER VEHICLE OUTFITTERS

2 PREPARE FOR INSTALLATION CONT...

(D) **Slide the three Channel Nuts (Item 13) into the Track (Item 16). Place the Track under the front cross strap of the Drawer System. Line the three Channel Nuts inside the Track up with the mounting holes in the cross strap (as indicated by the arrows) and loosely secure the Track in position using the three M8 x 16 Hex Bolts, three M8 x 25 Flat Washers and three M8 Springs Washers (Items 12, 14, 15). Center the Track from left to right and fasten.**

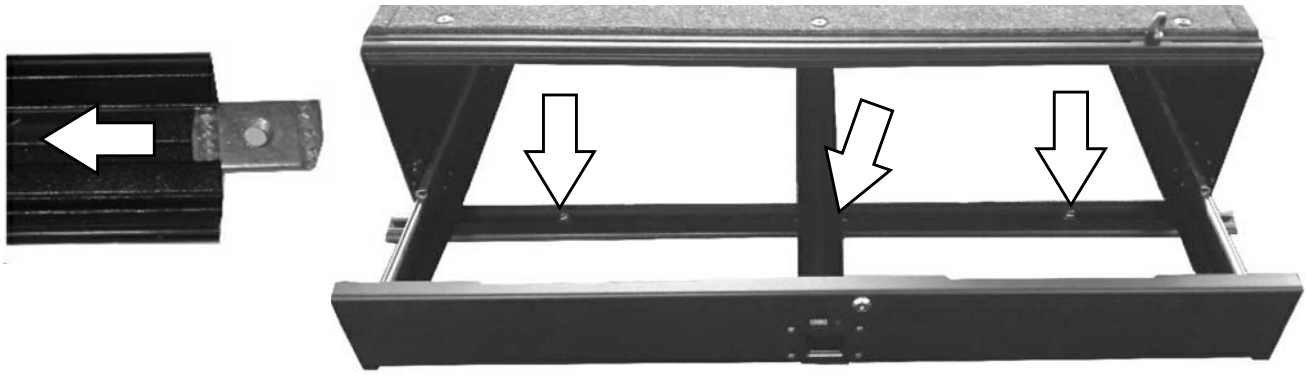

(E) **Looking at the rear of the Drawer System, remove the bolts as indicated by the arrows. Keep the bolts and washers safe as they will be used at a later stage.**

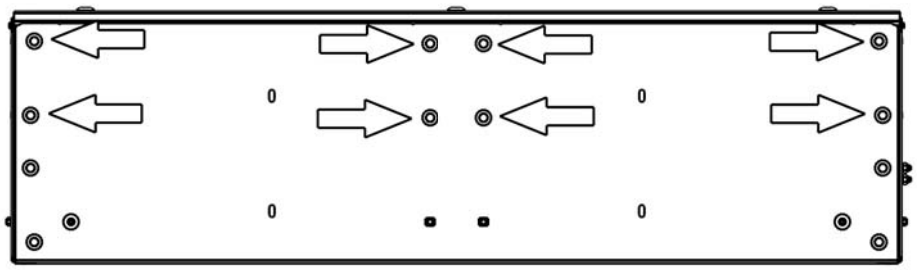

(F) **Using six M6 x 20 Hex Hex Bolts, six M6 Spring Washers and six M6 x 19 Flat Washers removed in Step 2E, secure the Rear Support (Item 23) to the back of the Drawer System as shown.**

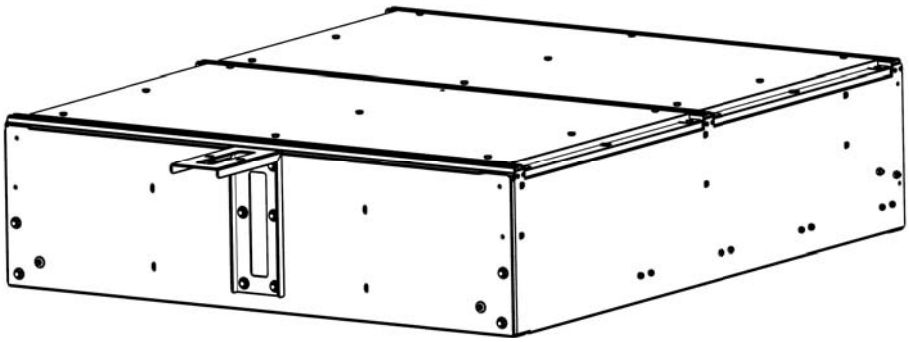

© COPYRIGHT 2015 FRONT RUNNER VEHICLE OUTFITTERS

2 PREPARE FOR INSTALLATION CONT...

(G) **Reffering to the diagram below, mark out the vehicle's load bay and drill a 6.5mm on each of your four markings.**

© COPYRIGHT 2015 FRONT RUNNER VEHICLE OUTFITTERS

2 PREPARE FOR INSTALLATION CONT...

(H) **Using the components received with SSDS501, secure the four D-ring's (Item 32) to the inside of the Load Bay. You will be bolting through each of the holes drilled in Step 2G using a M6 x 25 Hex Bolt, two M6 x 19 Flat Washers and a M6 Nyloc Nut per D-ring (Items 33, 34, 35) as shown.**

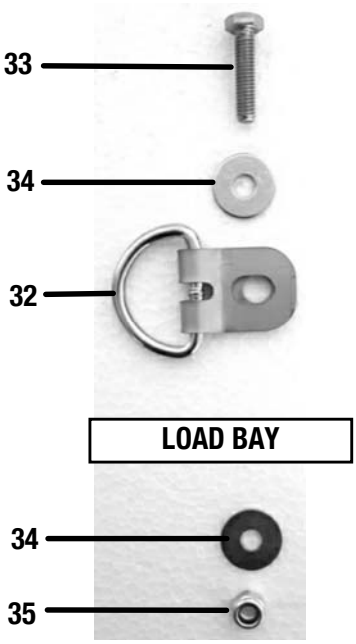

(I) **Remove the four tie down hooks from the vehicle's loadbay.**

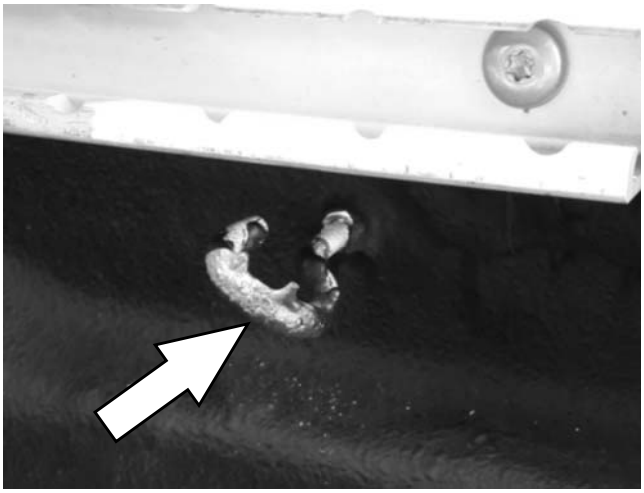

© COPYRIGHT 2015 FRONT RUNNER VEHICLE OUTFITTERS

3 INSTALL DRAWER SYSTEM

(A) **Lift the Drawer System (Item 1) into the vehicle's load bay and position it 45 mm in from the front of the load bay and center it from left to right.**

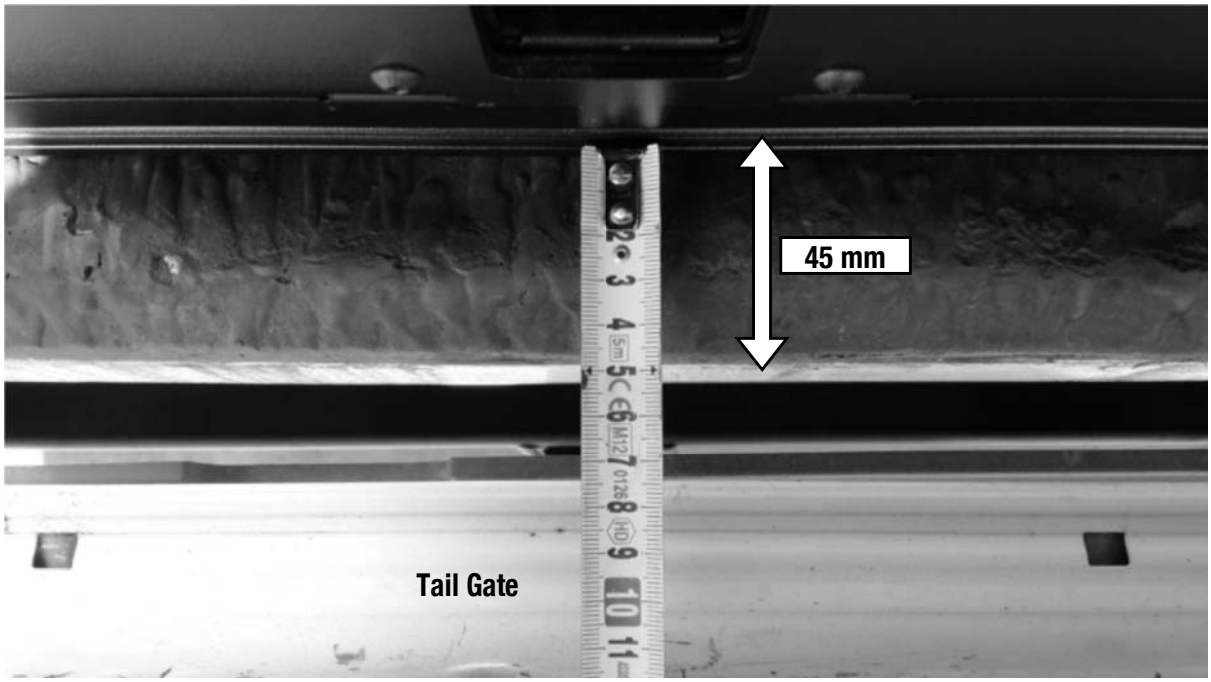

(B) **Secure the Side Wing Assemblies from Step 2A to the Drawer System using six M6 x 20 Hex Bolts, six M6 Spring Washers and six M6 Flat Washers (Items 17, 18, 19) received with SSWS001.**

When Securing the TOP mounting of the FRONT Wing Assemblies, loosely secure a D-ring (Item 4) to the Drawer and Wing Assembly using a M6 x 20 Hex Bolt, M6 Spring Washer and M6 x 19 Flat Washer (Item 5, 6, 7) received with SSWO008 as shown.

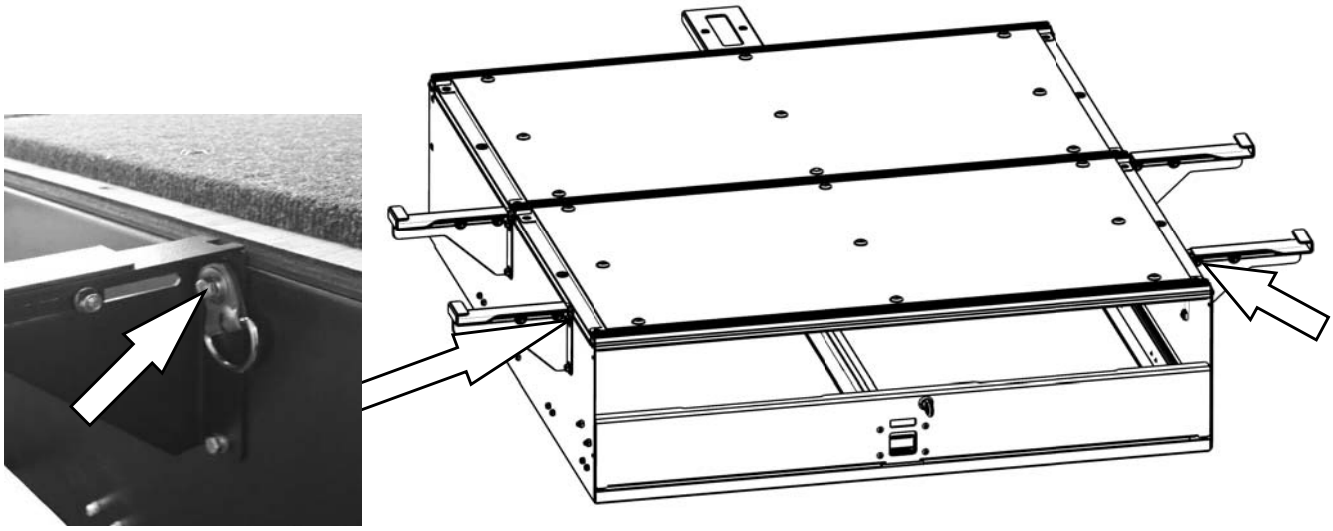

© COPYRIGHT 2015 FRONT RUNNER VEHICLE OUTFITTERS

3 INSTALL DRAWER SYSTEM CONT...

(C) **Position the Corner Wing Assemblies from Step 2B over the rear corners of the Drawer as shown. Secure the Assemblies to the Drawer using the remaining M6 x 20 Hex Bolts, M6 x 19 Flat Washers and M6 Spring Washers. As in Step 3B, secure a D-Ring (Item 4) to each of the rear corners as shown.**

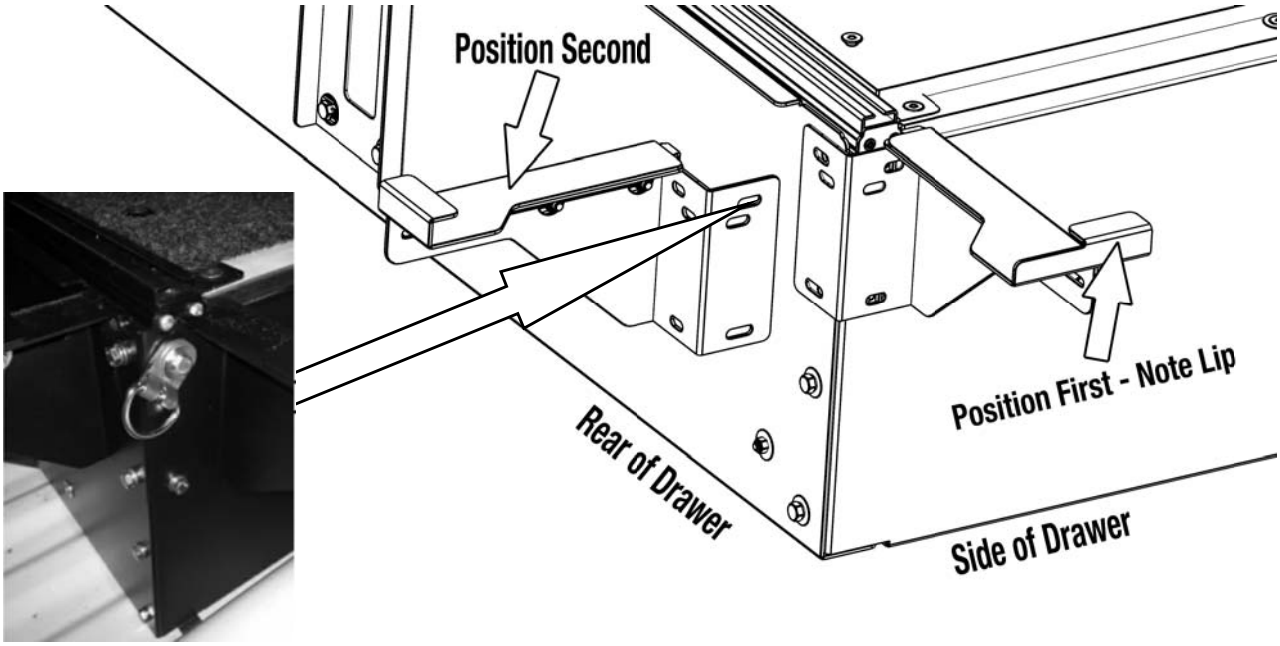

(D) **Secure the front and rear of the Drawer System to the vehicle using the 37 mm C-hooks and Turnbuckles (Items 2 & 36) as shown below. Ensure Drawer remains centered, left to right, and 45 mm in from the edge of the load bay (Refer to Step 3A).**

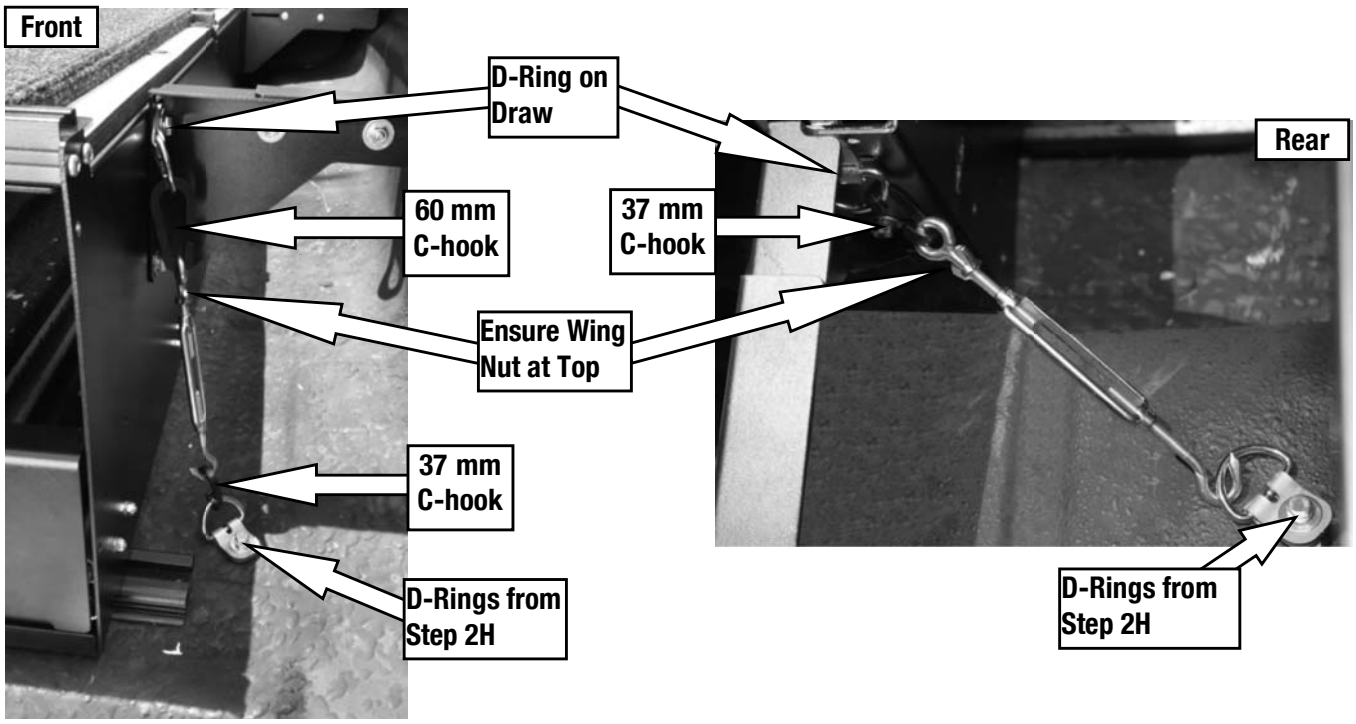

© COPYRIGHT 2015 FRONT RUNNER VEHICLE OUTFITTERS

3 INSTALL DRAWER SYSTEM CONT...

(E) Fit the Side and Rear Decks (Items 27, 28, 29, 30) into position, by "clipping" the outer edge of the Decks into the Wing Sliders (Items 26 & 27) and pushing the Decks towards the outside of the vehicle, thereby adjusting the Slider to the correct length. Once you are happy with the length of the Slider, carefully remove the Decks taking care not to move the Sliders and fasten the two bolts on each Slider, locking it into position.

(F) Secure the center of the Rear Decks to the Rear Support (Item 22) using the two M6 x 25 Countersunk Bolts and two M6 Finishing Washers (Items 36 & 37).

(G) Assemble the two Front Faces (Items 38, 39) to the side of the Drawer System using the four M6 x16 Button Head Bolts, four M6 Flat Washers and four M6 Nyloc Nuts (Items 34, 40, 41).

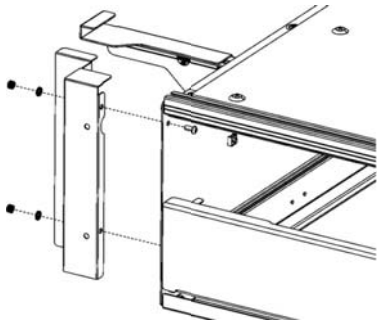

4 FITTING ELECTRICAL SOCKETS

(A)

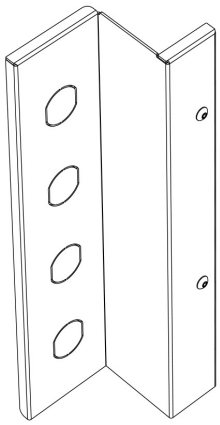

⚠ Twist the pre cut knock outs to remove. These cut outs can then be used to fit Front Runners range of electrical panel inserts.

(Sold Seperately)

ECOM117 - Amp Meter
ECOM118 - USB Socket
ECOM119 - 12/24V Socket
ECOM120 - Merit Socket
ECOM121 - Engel Socket
ECOM124 - Volt

© COPYRIGHT 2015 FRONT RUNNER VEHICLE OUTFITTERS

5 COMPLETION

(A)

Congratulations. You did it. Take a step back and admire your work!

6 Front Runner will not be responsible for any damage caused by the failure to install the product according to these instructions. Please call us if you have any questions about the installation of this product.

7 INSTALL OTHER VEHICLE AND RACK ACCESSORIES

Now's the time to visit your favorite Front Runner Dealer in person or Online.

Be sure to tag us. We love to see our gear in action! #FrontRunnerOutfitters #BornToRoam

Share your adventures on:

© COPYRIGHT 2015 FRONT RUNNER VEHICLE OUTFITTERS