FRONT RUNNER
VEHICLE OUTFITTERS

DRAWER DECK COMPLETION SET

FORD EVEREST 2015 – CURRENT

ENG

SSDS202

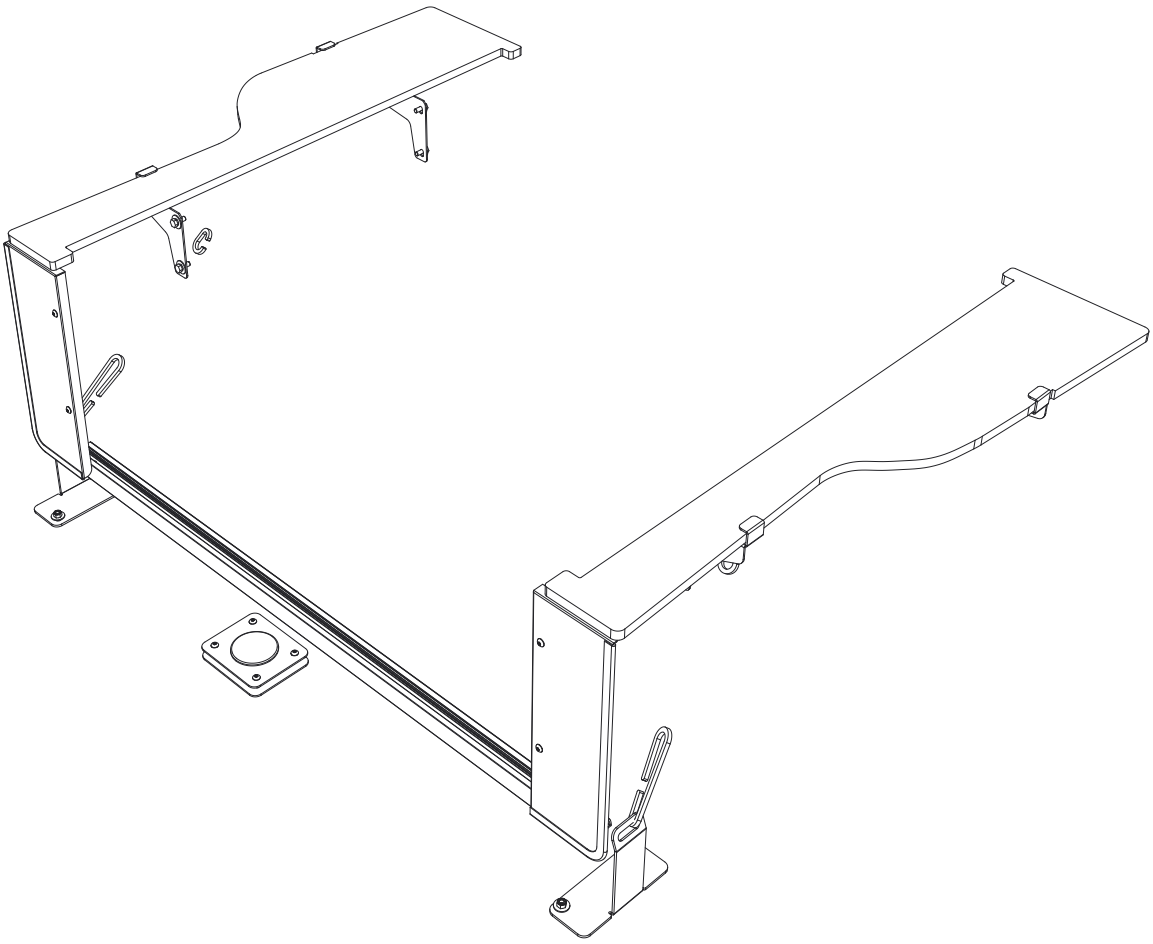

READ ME !

Thank you for purchasing a Front Runner Deck Completion Set.

Before you start, take a moment to familiarize yourself with this Fitting Instruction and the components received.

Refer to Page 2 for a list of all the components, quantities and tools required.

IMPORTANT WARNING!

IT IS CRITICAL THAT ALL FRONT RUNNER PRODUCTS BE PROPERLY AND SECURELY ASSEMBLED AND ATTACHED TO YOUR VEHICLE. IMPROPER ATTACHMENT COULD RESULT IN AN AUTOMOBILE ACCIDENT, AND COULD CAUSE SERIOUS BODILY INJURY OR DEATH. YOU ARE RESPONSIBLE FOR ASSEMBLING AND SECURING ALL FRONT RUNNER PRODUCTS TO YOUR VEHICLE, CHECKING THE ATTACHMENTS PRIOR TO USE, AND PERIODICALLY INSPECTING THE PRODUCTS FOR ADJUSTMENT, WEAR AND DAMAGE. THEREFORE, YOU MUST READ AND UNDERSTAND ALL OF THE INSTRUCTIONS AND PRECAUTIONS SUPPLIED WITH YOUR FRONT RUNNER PRODUCT PRIOR TO INSTALLATION OR USE. IF YOU DO NOT UNDERSTAND ALL OF THE INSTRUCTIONS AND CAUTIONS, OR IF YOU HAVE NO MECHANICAL EXPERIENCE AND ARE NOT THOROUGHLY FAMILIAR WITH THE INSTALLATION PROCEDURES, YOU SHOULD HAVE THE PRODUCT INSTALLED BY A PROFESSIONAL INSTALLER OR OTHER QUALIFIED PERSONNEL.

NOTE: Front Runner will not be responsible for any damage caused by the failure to install the product according to these instructions.

Please call us if you have any questions about the installation of this product.

© 2019 FRONT RUNNER VEHICLE OUTFITTERS

1 GET ORGANIZED

IN THE BOX

1	1 X	Side Deck LH
2	1 X	Side Deck RH
3	1 X	Side Wing LH Rear
4	1 X	Side Wing RH Rear
5	2 X	Side Wing LH & RH Front
6	1 X	Plastic End Cap
7	2 X	Rear Tie-Down Bracket
8	1 X	Track
9	2 X	Front Face LH & RH
10	1 X	Wheel Winder Cover
11	1 X	Spacer
12	1 X	Wheel Winder Cover Bottom Plate
13	8 X	M6 x 16 Hex Bolt
14	8 X	M6x19x1ss Flat Washer
15	8 X	M6 Spring Washer
16	4 X	M5 x 25 Button Head
17	8 X	M5 Flat Washer
18	8 X	M5 Nyloc
19	4 X	M5 x 10 Button Head

IN THE BOX

20	2 X	Carabiner Hook 37mm
21	2 X	Carabiner Hook 115mm
22	2 X	Pinch Weld
23	1 X	Wheel Winder T-Handel
24	1 X	Wheel Winder Adapter
25	2 X	Front Face 1LH + 1RH With Knockouts

TOOLS NEEDED

8MM
10MM

8MM
10MM

H3

FIGURE 1.1

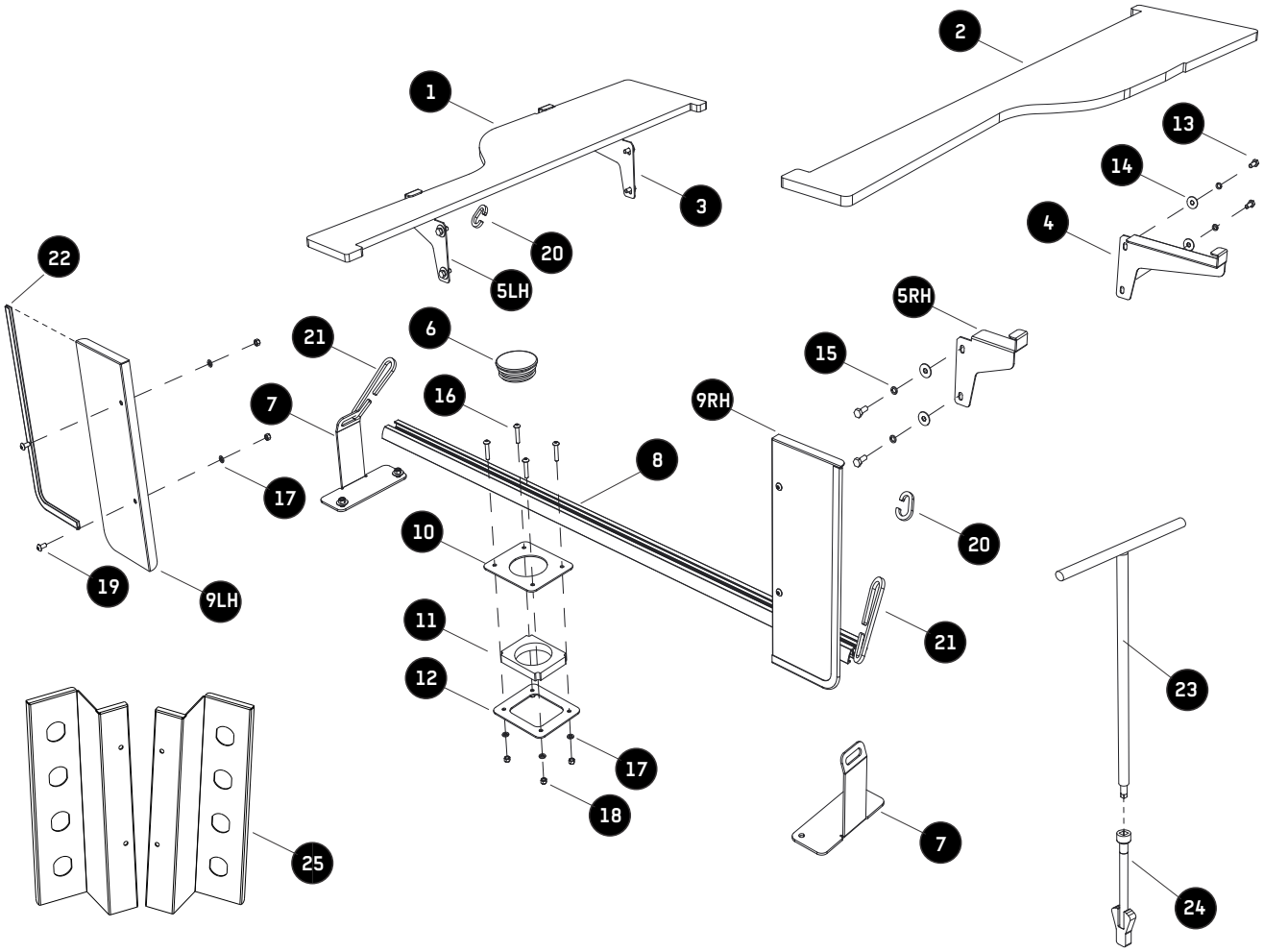

 © 2019 FRONT RUNNER VEHICLE OUTFITTERS

2 FIT AND SECURE

2.1

Remove the tool tray.

2.2

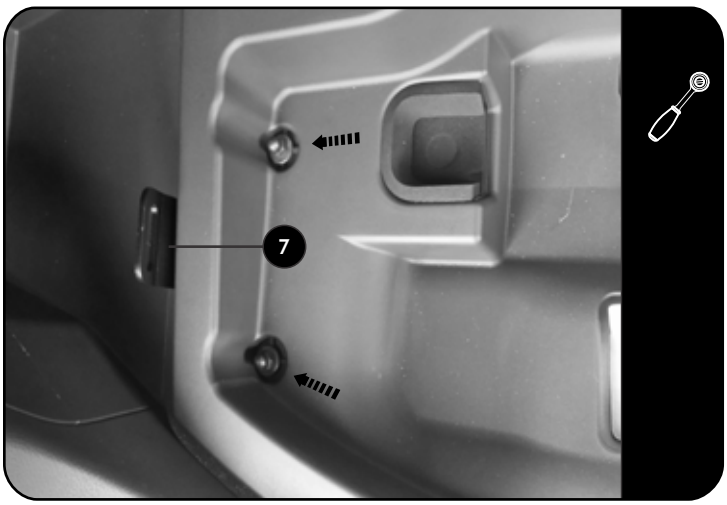

Place item 7 in position over the existing studs. Do this on the left and right side of the tray. Refit the tool tray. Item 7 will be secured by the existing nuts that are shown.

2.3

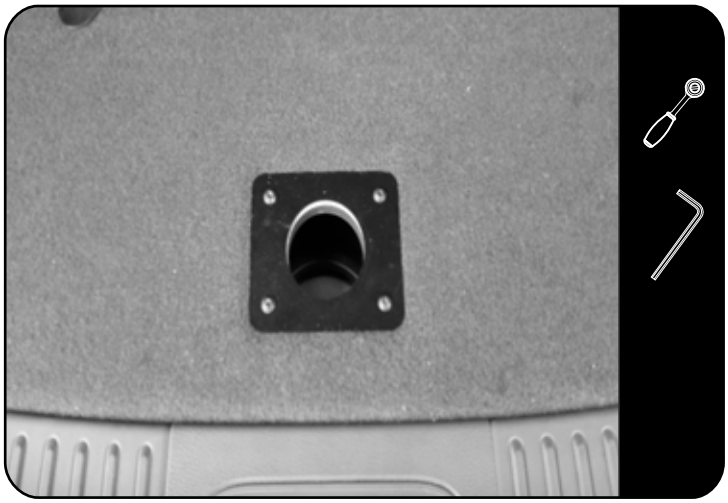

Remove the handle of the tool tray cover and replace it with item 10, 11 and 12. Refer to 1.1

© 2019 FRONT RUNNER VEHICLE OUTFITTERS

3 FIT AND SECURE

2.4

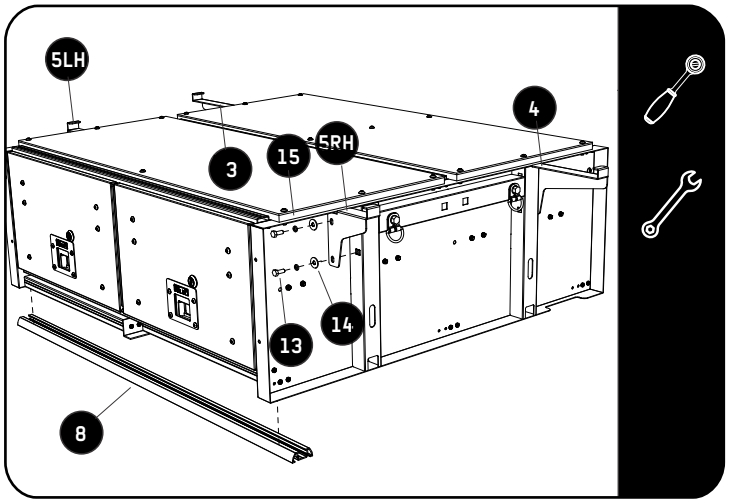

Place item 8 and the drawer in the vehicle before assembling the wings onto the drawer. Refer to 3.3 for wing placement.

2.5

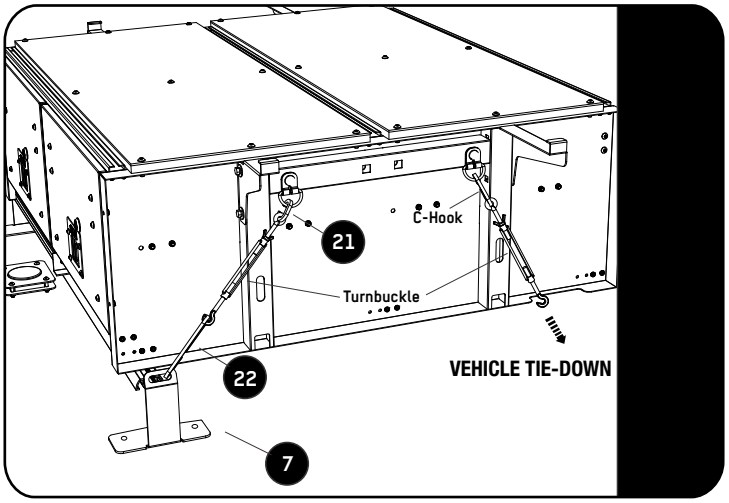

Secure the drawer to the vehicles front tie-down points and item 7 using the items shown in 2.5

The turnbuckles and c-hooks are supplied with SSDR005

Before securing the drawer, make sure that the rear door does not interfere with the drawer.

2.6

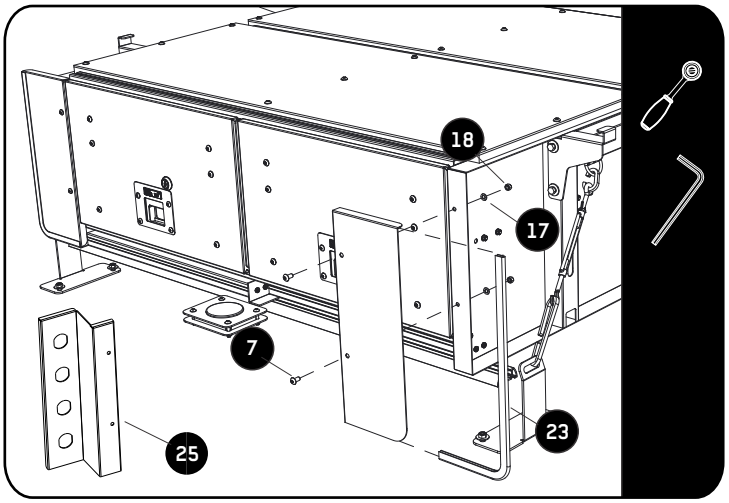

Secure the Front Faces (Item 23 or 25) to the drawer using M5 x 12 Button Heads, M5 Flat Washers and M5 Nyloc Nuts (Items 7, 17 & 18) as shown.

 © 2019 FRONT RUNNER VEHICLE OUTFITTERS

2 FIT AND SECURE

2.7

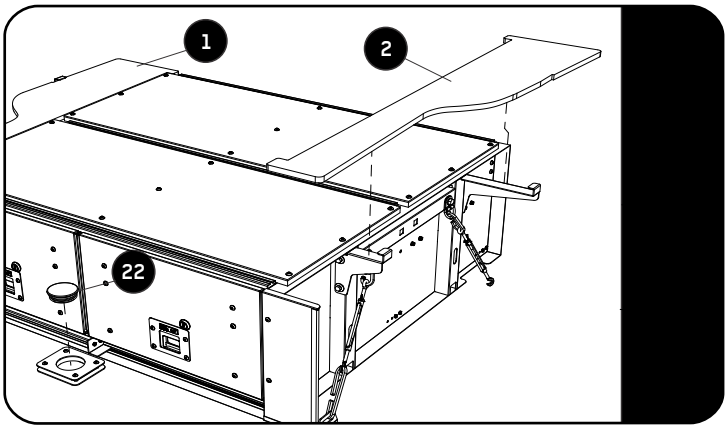

Fit the side decks (item 1 and 2).

LOWERING THE SPARE WHEEL
Remove item 22. Using the T-handel supplied, locate the wheel winder and turn anti clock wise to lower the wheel.

3 FITTING ELECTRICAL SOCKETS

3.1

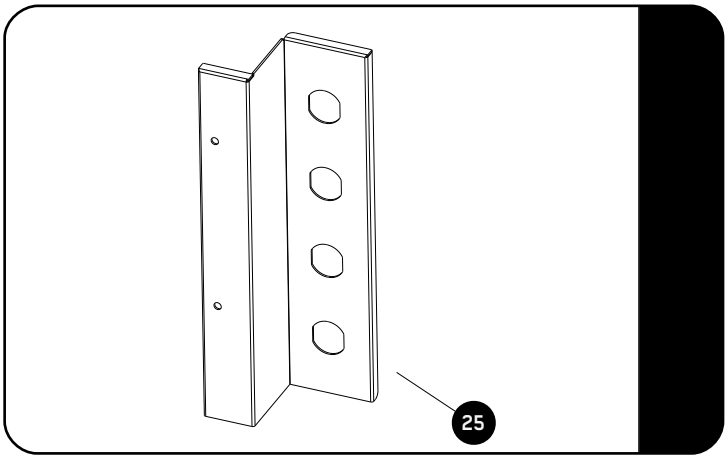

Twist the pre cut knock outs to remove. These cut outs can then be used to fit Front Runners range of electrical sockets. (Sold Separately)

ECOM117 - Amp
ECOM118 - USB
ECOM119 - 12/24V
ECOM120 - Merit
ECOM121 - Engel
ECOM124 - Volt

4 COMPLETION

Congratulations! You did it. Take a step back and admire your work!

5 INSTALL OTHER VEHICLE AND RACK ACCESSORIES

Now's the time to visit your favorite Front Runner Dealer in person or online.

Be sure to tag us. We love to see our gear in action! #FrontRunnerOutfitters #BornToRoam

Share your adventures on:

© 2019 FRONT RUNNER VEHICLE OUTFITTERS