FRONT RUNNER

SUZUKI JIMNY 3RD GEN (1998-2018) DECK COMPLETION SET

ENG

SSDS130

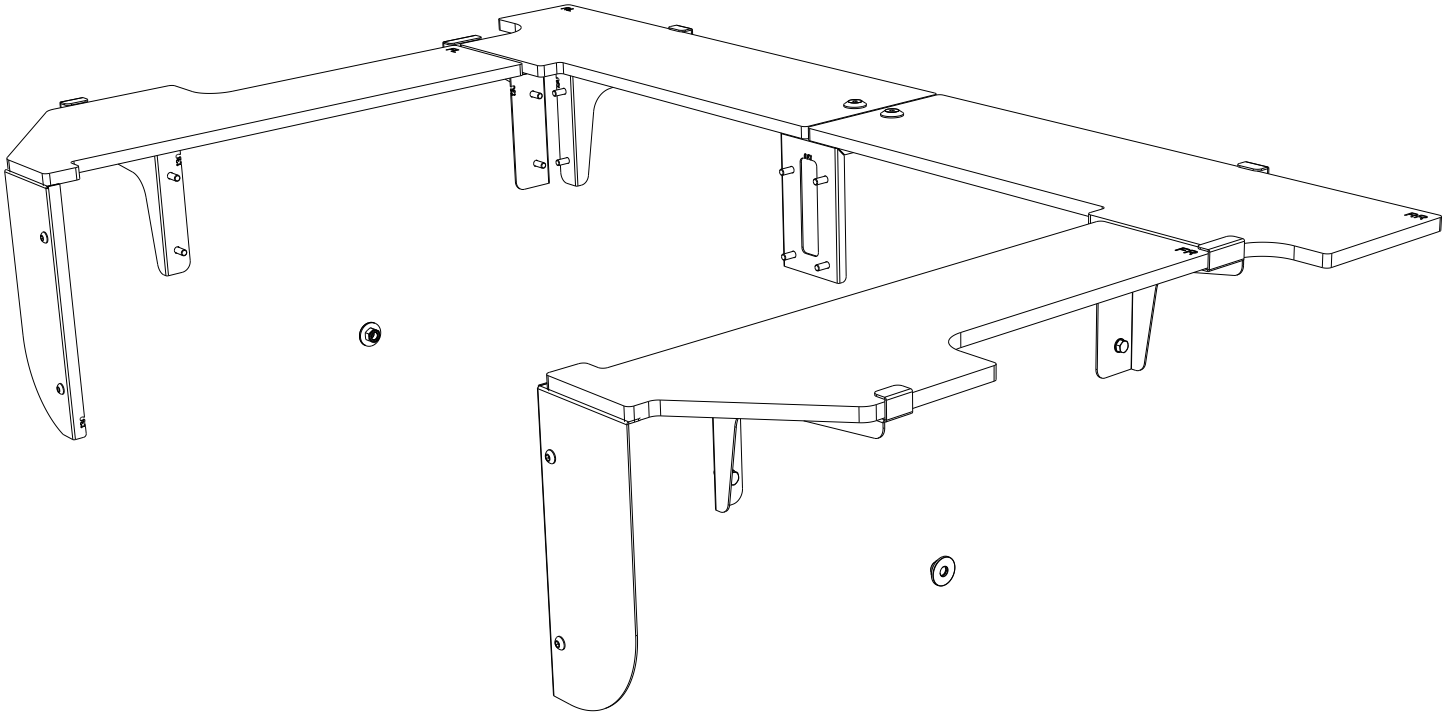

READ ME!

Thank you for purchasing a Front Runner Land Rover 90 / 110 (2007 - 2016) / Suzuki Jimny (1998 - 2018) Deck Completion Set

Before you start, take a moment to familiarize yourself with the Fitting Instructions and the included components.

Refer to Page 2 for a list of all the components, quantities and tools required.

IMPORTANT WARNING!

IT IS CRITICAL THAT ALL FRONT RUNNER PRODUCTS BE PROPERLY AND SECURELY ASSEMBLED AND ATTACHED TO YOUR VEHICLE. IMPROPER ATTACHMENT COULD RESULT IN AN AUTOMOBILE ACCIDENT, AND COULD CAUSE SERIOUS BODILY INJURY OR DEATH. YOU ARE RESPONSIBLE FOR ASSEMBLING AND SECURING ALL FRONT RUNNER PRODUCTS TO YOUR VEHICLE, CHECKING THE ATTACHMENTS PRIOR TO USE, AND PERIODICALLY INSPECTING THE PRODUCTS FOR ADJUSTMENT, WEAR AND DAMAGE. THEREFORE, YOU MUST READ AND UNDERSTAND ALL OF THE INSTRUCTIONS AND PRECAUTIONS SUPPLIED WITH YOUR FRONT RUNNER PRODUCT PRIOR TO INSTALLATION OR USE. IF YOU DO NOT UNDERSTAND ALL OF THE INSTRUCTIONS AND CAUTIONS, OR IF YOU HAVE NO MECHANICAL EXPERIENCE AND ARE NOT THOROUGHLY FAMILIAR WITH THE INSTALLATION PROCEDURES, YOU SHOULD HAVE THE PRODUCT INSTALLED BY A PROFESSIONAL INSTALLER OR OTHER QUALIFIED PERSONNEL.

NOTE: Front Runner will not be responsible for any damage caused by the failure to install the product according to these instructions.

Please call us if you have any questions about the installation of this product.

 © 2022 FRONT RUNNER VEHICLE OUTFITTERS

1 GET ORGANIZED

IN THE BOX

1	2 X	Front Face Plate 1 LH & 1 RH
2	2 X	Wing Front 1 LH & 1 RH
3	2 X	Wing Center 1 LH & 1 RH
4	2 X	Wing Rear 1 LH & 1 RH
5	1 X	Wing Rear Center
6	1 X	Deck Rear RH
7	1 X	Deck Rear LH
8	1 X	Deck Front RH
9	1 X	Deck Front LH
10	16 X	M6 x 12 Flat Washers
11	4 X	M6 x 16 Button Head Bolt
12	16 X	M6 x 16 Hex Head Bolt
13	2 X	M8 x 25 x 2 Flat Washer

IN THE BOX

14	2 X	M8 Nyloc Nut
15	2 X	M6 Cage Nut
16	2 X	M6 Finishing Washer
17	2 X	M6 x 30 Countersunk Screw

TOOLS NEEDED

FIGURE 1.1

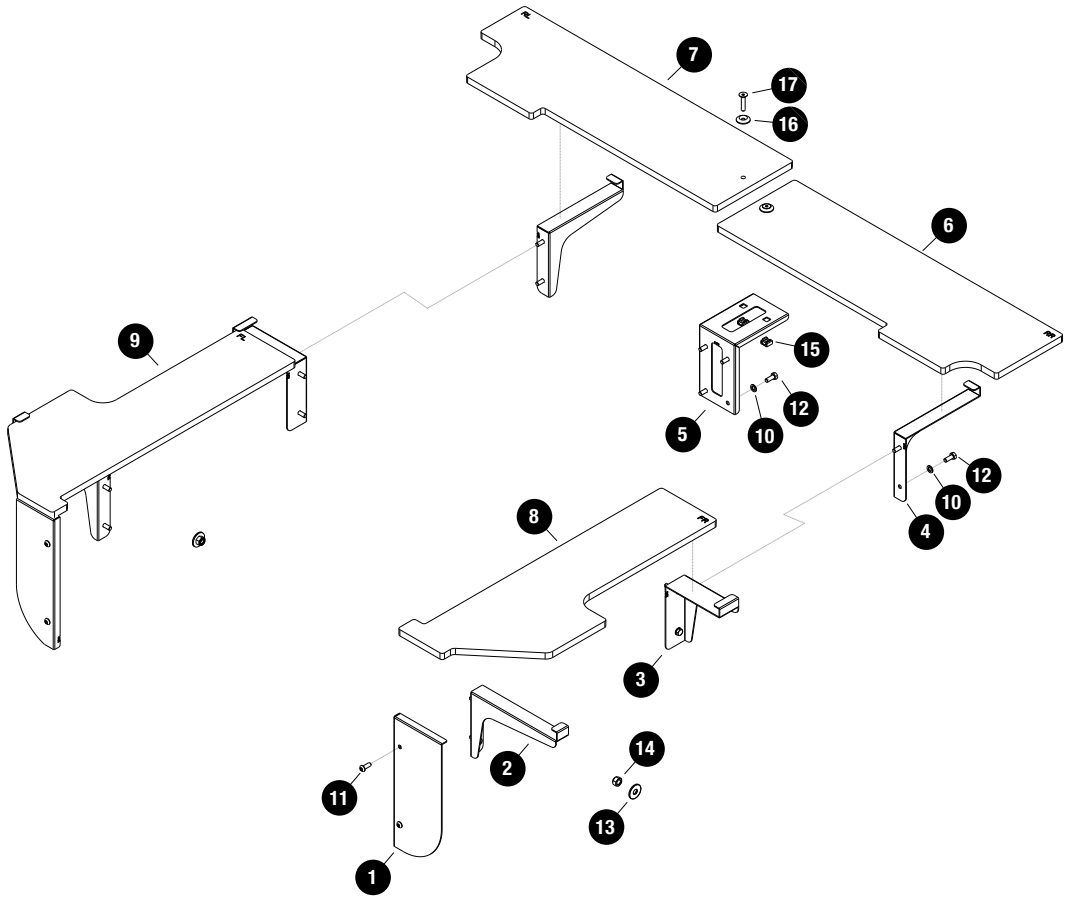

 © 2022 FRONT RUNNER VEHICLE OUTFITTERS

2 FIT AND SECURE

2.1

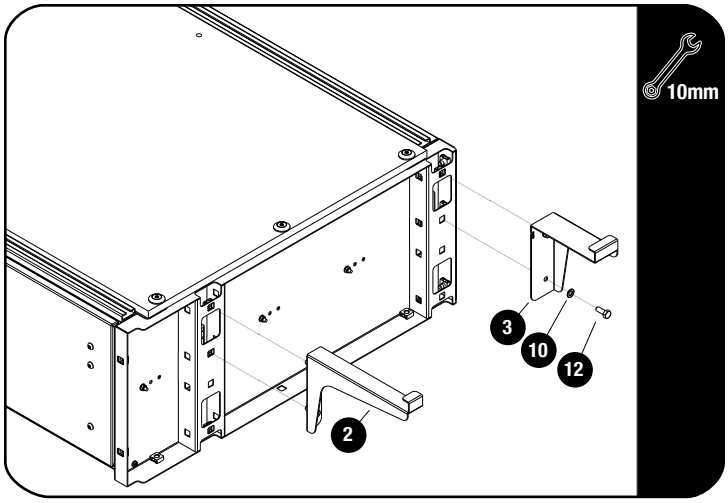

Refer to Fitment Guide SSLD002 for Drawer Fitment.

Secure the four LH / RH Side Wing Brackets (Items 2 & 3) to the drawer system, using M6 x 20 Hex Bolts and M6 x 19 Flat Washers (Items 10 & 12).

2.2

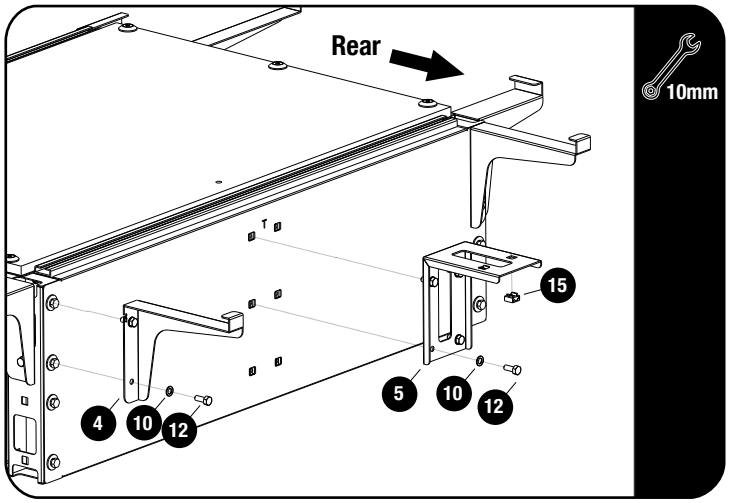

Assemble the M6 Cage Nut (Item 15) to the Rear Wing Center Plate (Item 5).

Secure the Rear Wing Brackets (Items 4 & 5) using fasteners from the Drawer System as shown, M8 x 16 Hex Bolt, M8 Washer and M8 Nyloc Nut.

2.3

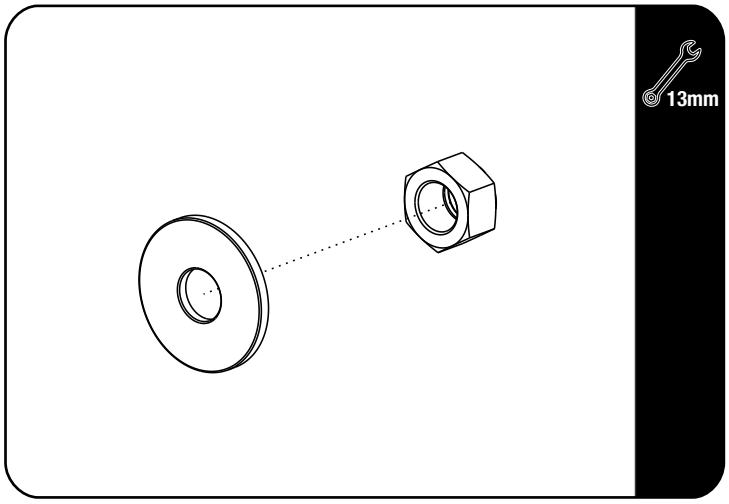

Secure the M8 x 25 x 2 Flat Washer and M8 Nyloc Nut to the pin as shown in 2.4 to secure the turnbuckles (Suplied with SSDR011).

© 2022 FRONT RUNNER VEHICLE OUTFITTERS

2 FIT AND SECURE

2.4

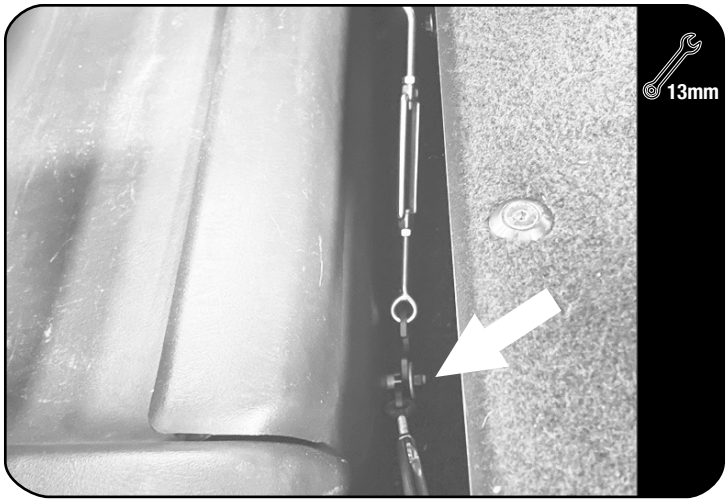

Refer to 2.3.

2.5

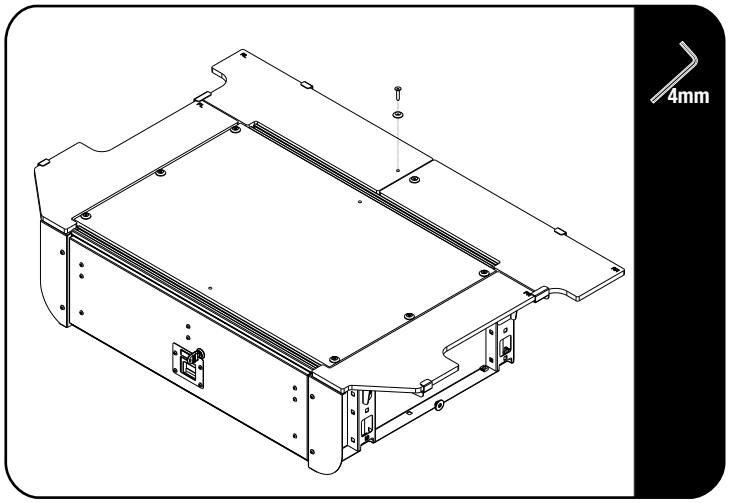

Secure the Front LH & RH Deck Set (Items 8 & 9) to the Wing Brackets.

Secure the Rear LH & RH Deck Set to the wing brackets using M6 Finishing Washers and M6 x 30 Countersunk Screws (Items 16 & 17) as shown.

2.6

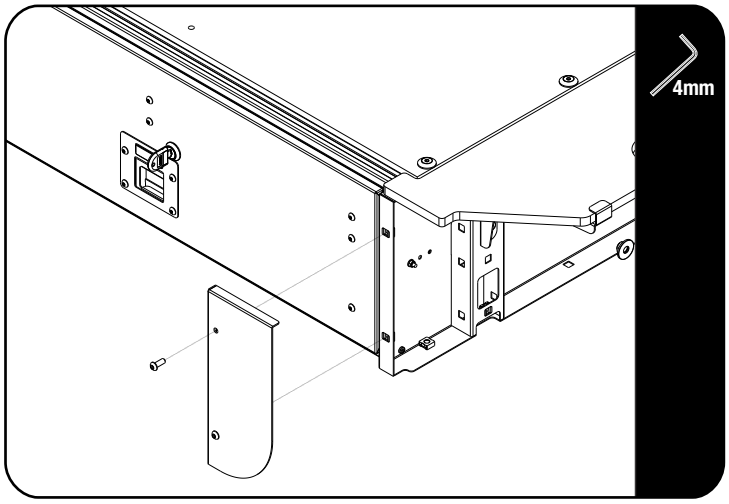

Secure the Front Face Plate LH & RH (Item 1) to the drawer system using M6 x 16 Button Head Bolts (Item 11).

© 2022 FRONT RUNNER VEHICLE OUTFITTERS

3 FINISH

Congratulations! You did it. Take a step back and admire your work!

4 INSTALL OTHER VEHICLE AND RACK ACCESSORIES

Now's the time to visit your favorite Front Runner dealer in person or online.

Be sure to tag us. We love to see our gear in action! #FrontRunnerOutfitters #BornToRoam

Share your adventures on:

© 2022 FRONT RUNNER VEHICLE OUTFITTERS