FRONT RUNNER

FORD BRONCO 4 DOOR (2021-CURRENT) DECK COMP SET

ENG

SSDS129

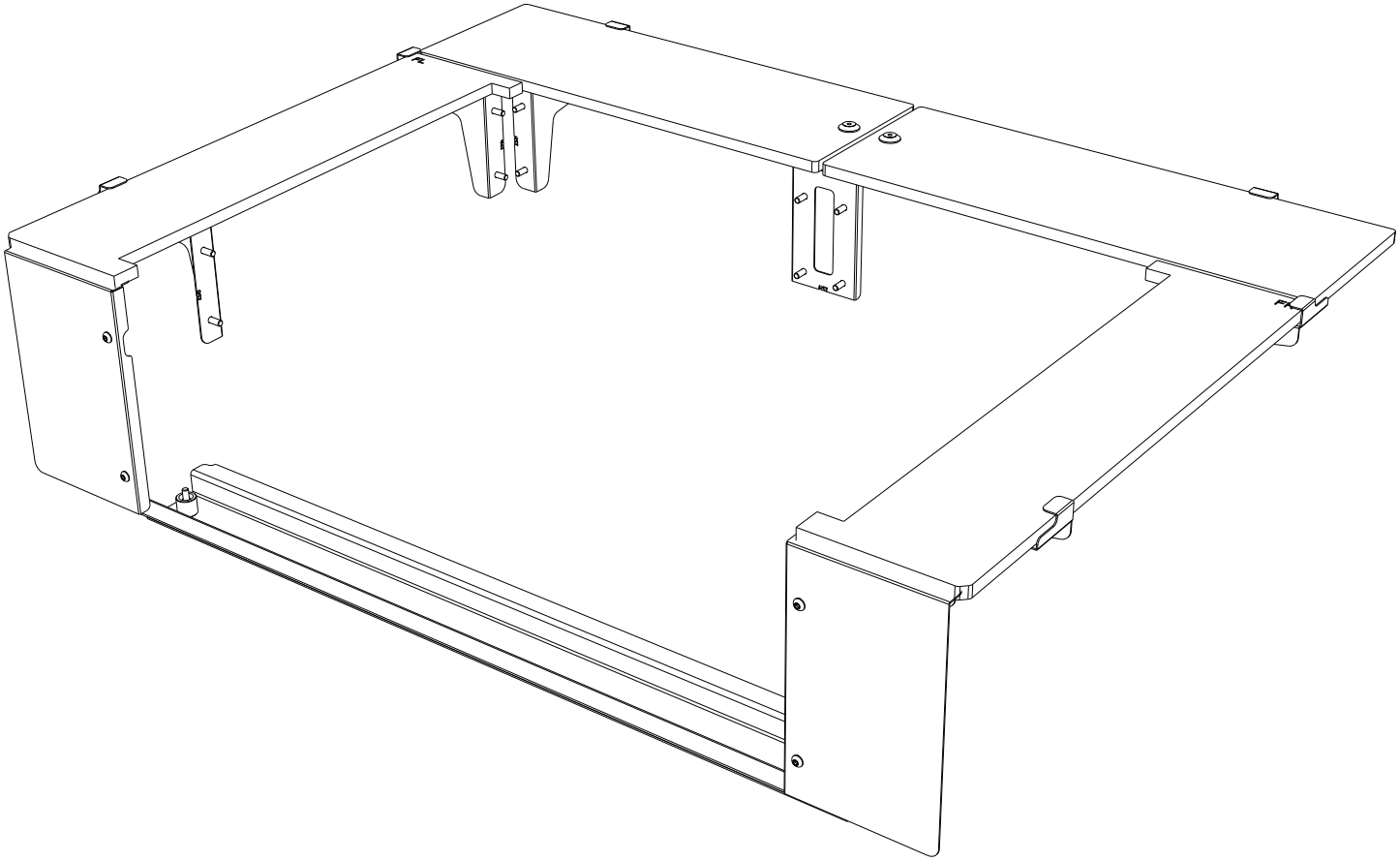

READ ME !

Thank you for purchasing a Front Runner Ford Bronco 4 Door (2021-Current) Deck Completion Set.

Before you start, take a moment to familiarize yourself with the Fitting Instructions and the included components.

Refer to Page 2 for a list of all the components, quantities and tools required.

IMPORTANT WARNING!

IT IS CRITICAL THAT ALL FRONT RUNNER PRODUCTS BE PROPERLY AND SECURELY ASSEMBLED AND ATTACHED TO YOUR VEHICLE. IMPROPER ATTACHMENT COULD RESULT IN AN AUTOMOBILE ACCIDENT, AND COULD CAUSE SERIOUS BODILY INJURY OR DEATH. YOU ARE RESPONSIBLE FOR ASSEMBLING AND SECURING ALL FRONT RUNNER PRODUCTS TO YOUR VEHICLE, CHECKING THE ATTACHMENTS PRIOR TO USE, AND PERIODICALLY INSPECTING THE PRODUCTS FOR ADJUSTMENT, WEAR AND DAMAGE. THEREFORE, YOU MUST READ AND UNDERSTAND ALL OF THE INSTRUCTIONS AND PRECAUTIONS SUPPLIED WITH YOUR FRONT RUNNER PRODUCT PRIOR TO INSTALLATION OR USE. IF YOU DO NOT UNDERSTAND ALL OF THE INSTRUCTIONS AND CAUTIONS, OR IF YOU HAVE NO MECHANICAL EXPERIENCE AND ARE NOT THOROUGHLY FAMILIAR WITH THE INSTALLATION PROCEDURES, YOU SHOULD HAVE THE PRODUCT INSTALLED BY A PROFESSIONAL INSTALLER OR OTHER QUALIFIED PERSONNEL.

NOTE: Front Runner will not be responsible for any damage caused by the failure to install the product according to these instructions.

Please call us if you have any questions about the installation of this product.

 © 2022 FRONT RUNNER VEHICLE OUTFITTERS

1 GET ORGANIZED

IN THE BOX

1	2 X	Rear Wing 1 LH + 1 RH
2	4 X	Side Wing 2 LH + 2 RH
3	1 X	Rear Center Wing
4	2 X	Front Face Plate 1 LH + 1 RH
5	1 X	Support Spacer
6	1 X	Front Deck LH
7	1 X	Front Deck RH
8	2 X	Rear Deck
9	2 X	Aluminium Spacer
10	18 X	M6 x 12 x 1 Flat Washer
11	2 X	M6 x 30 Button Head Bolt
12	4 X	Carabiner
13	2 X	M6 Finishing Washer
14	2 X	M6 x 30 Countersunk Screw
15	4 X	M6 x 16 Button Head Bolt
16	16 X	M6 x 16 Hex Head Bolt
17	2 X	M6 Caged Nut

TOOLS NEEDED

FIGURE 1.1

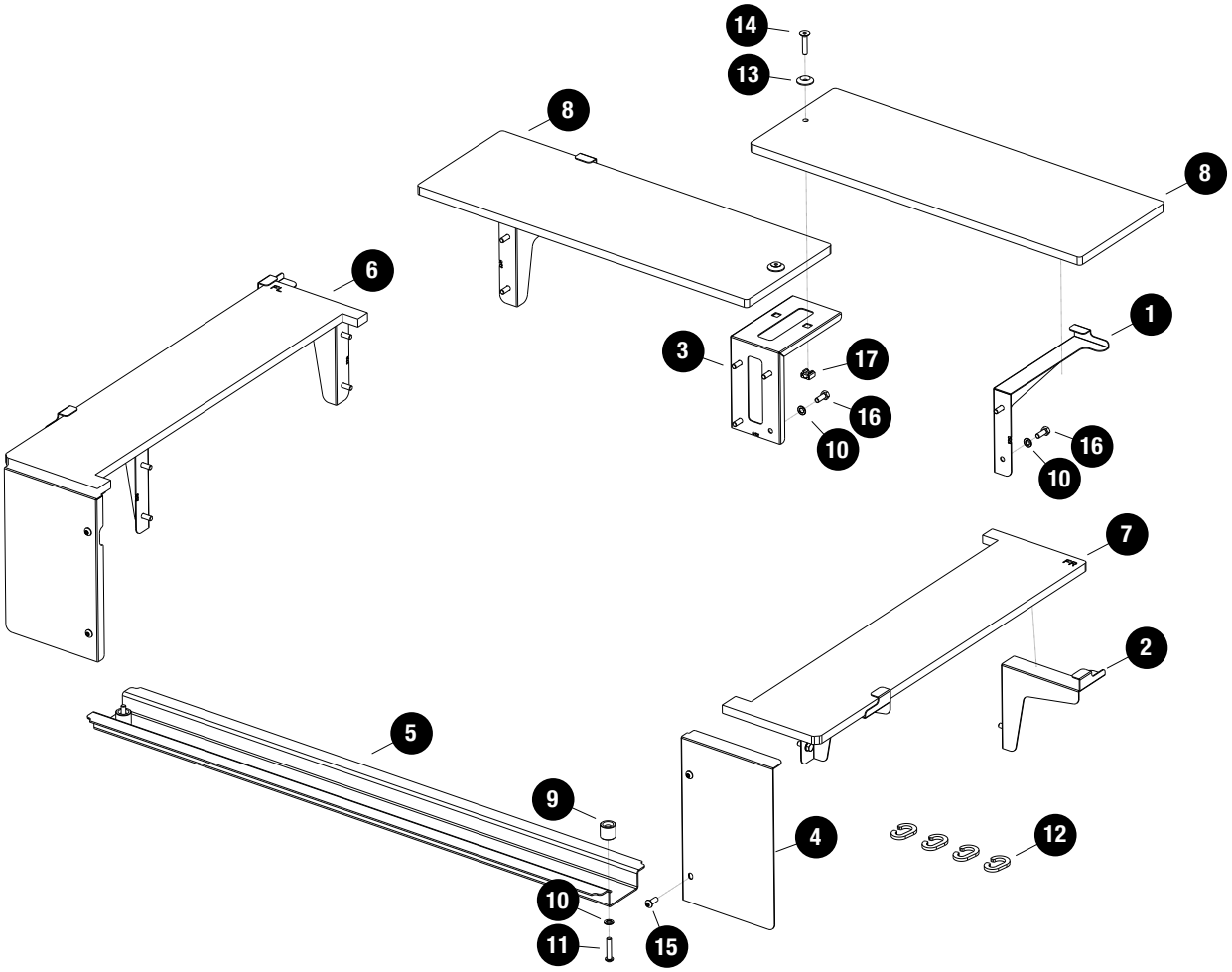

 © 2022 FRONT RUNNER VEHICLE OUTFITTERS

2 FIT AND SECURE

2.1

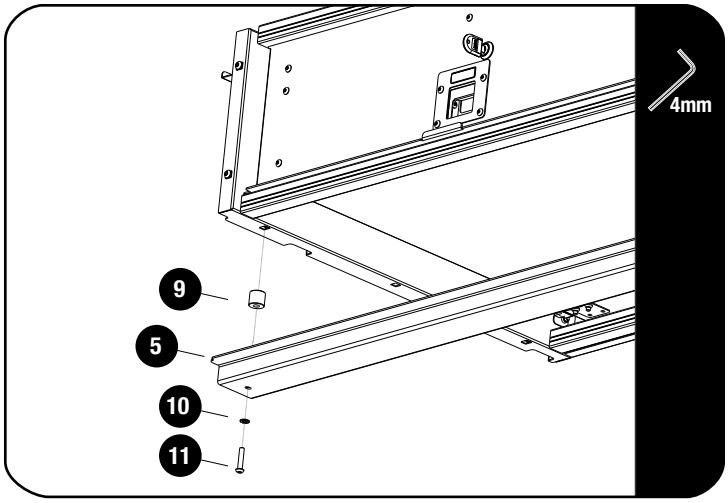

Secure the Support Spacer (Item 5) to the Drawer System (Sold Seperately) using Aluminium Spacers, M6 x 12 x 1 Flat Washers and M6 x 30 Button Head Bolts (Items 9, 10 & 11).

2.2

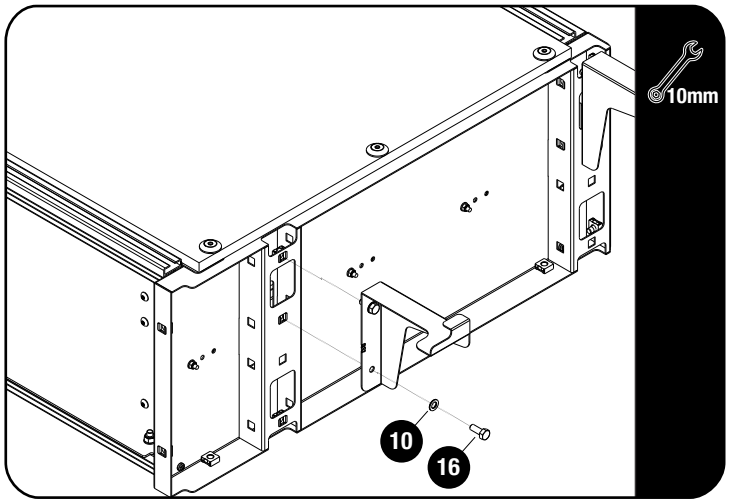

Secure the Side Wing Plates (Item 2) to the Drawer System using M6 x 12 x 1 flat Washers and M6 x 16 Hex Head Bolts (Items 10 & 16).

2.3

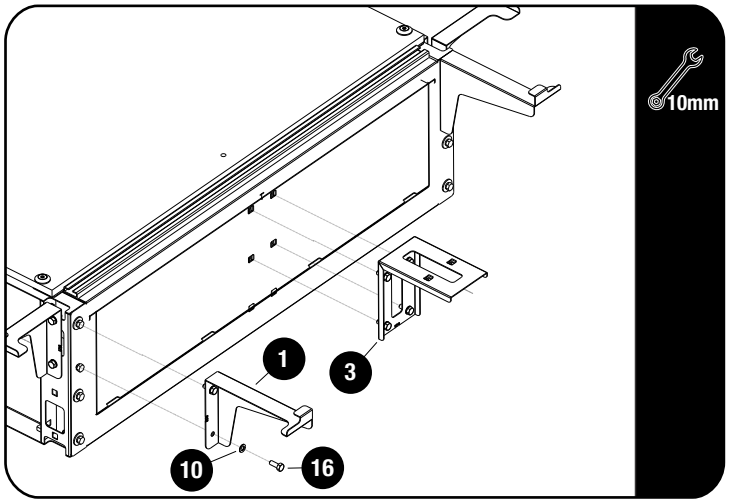

Secure the Rear Wing Plates and Rear Center Wing Plate (Items 1 & 3) to the Drawer System using M6 x 12 x 1 Flat Washers and M6 x 16 Hex Head Bolts (Items 10 & 16).

© 2022 FRONT RUNNER VEHICLE OUTFITTERS

2 FIT AND SECURE

2.1

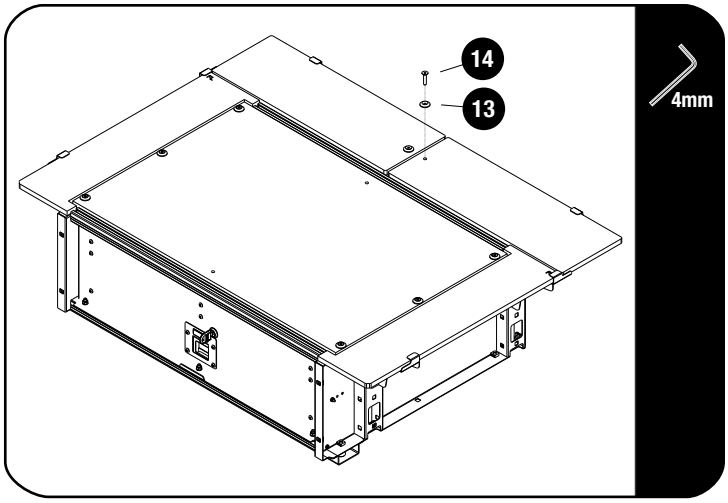

Refer to Fitment Guide SSDR011 before proceeding with the following step.

Assemble the LH and RH Decks to the wing plates.

Secure the Rear Decks to the wing Plate using M8 Finishing Washer and M6 x 30 Countersunk Screw (Item 13 & 14).

2.1

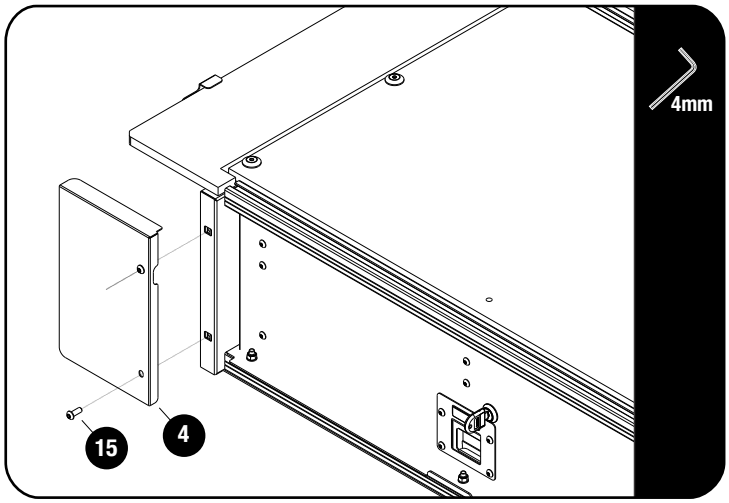

Secure the Front Face Plates (Item 4) to the Drawer System using M6 x 16 Button Head Bolts (Item 15).

3 FINISH

Congratulations! You did it. Take a step back and admire your work!

4 INSTALL OTHER VEHICLE AND RACK ACCESSORIES

Now's the time to visit your favorite Front Runner Dealer in person or online.

Be sure to tag us. We love to see our gear in action! #FrontRunnerOutfitters #BornToRoam

Share your adventures on:

© 2022 FRONT RUNNER VEHICLE OUTFITTERS