FRONT RUNNER

FORD RANGER RAPTOR (2019-CURRENT) W/DROP-IN BED LINER DECK COMPLETION SET

ENG

SSDS126

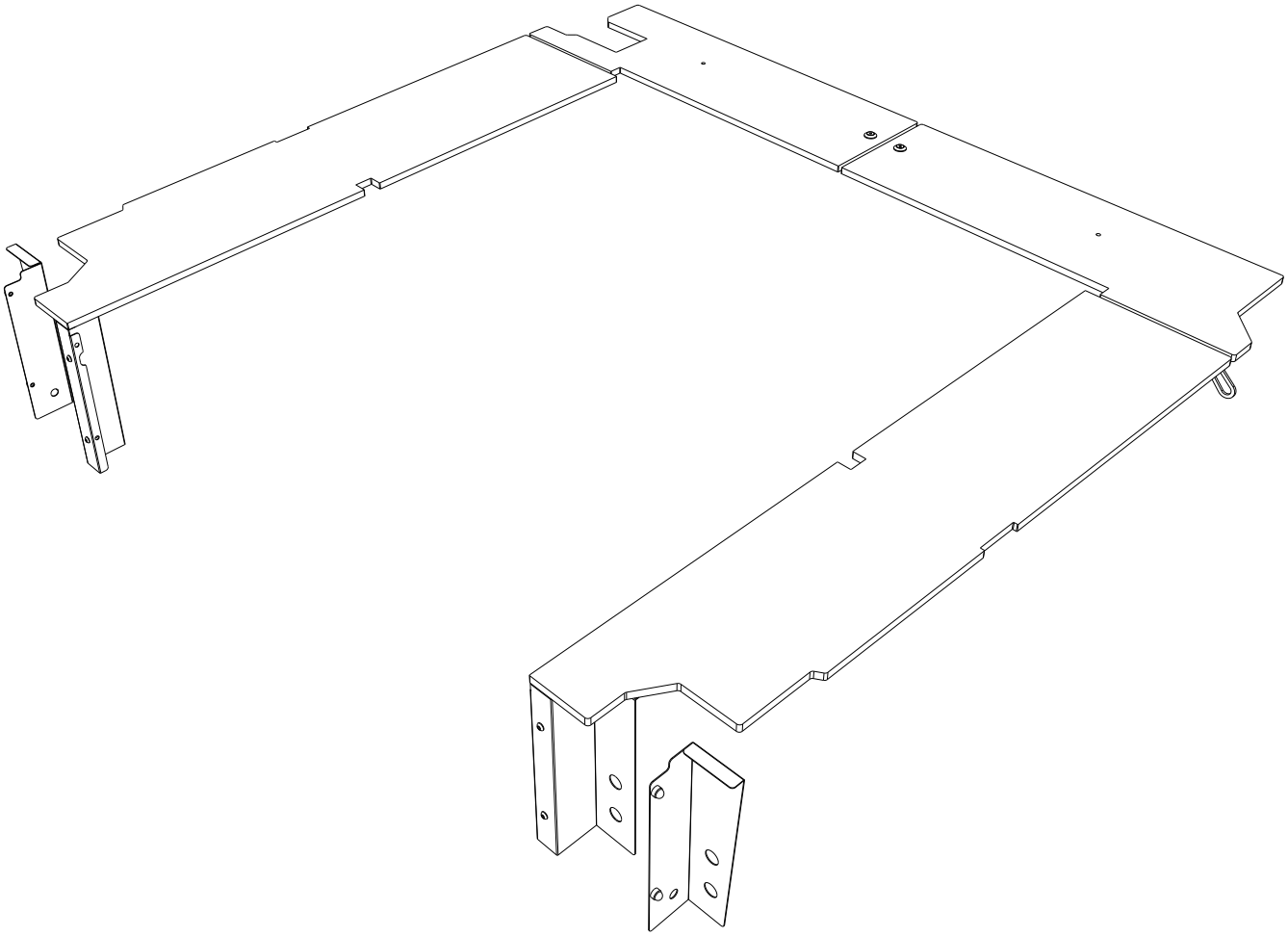

READ ME !

Thank you for purchasing a Front Runner Ford Raptor (2019 - Current) w/Drop-In Bed Liner Deck Completion Set.

Before you start, take a moment to familiarize yourself with the Fitting Instructions and the components received.

Refer to Page 2 for a list of all the components, quantities and tools required.

IMPORTANT WARNING!

IT IS CRITICAL THAT ALL FRONT RUNNER PRODUCTS BE PROPERLY AND SECURELY ASSEMBLED AND ATTACHED TO YOUR VEHICLE. IMPROPER ATTACHMENT COULD RESULT IN AN AUTOMOBILE ACCIDENT, AND COULD CAUSE SERIOUS BODILY INJURY OR DEATH. YOU ARE RESPONSIBLE FOR ASSEMBLING AND SECURING ALL FRONT RUNNER PRODUCTS TO YOUR VEHICLE, CHECKING THE ATTACHMENTS PRIOR TO USE, AND PERIODICALLY INSPECTING THE PRODUCTS FOR ADJUSTMENT, WEAR AND DAMAGE. THEREFORE, YOU MUST READ AND UNDERSTAND ALL OF THE INSTRUCTIONS AND PRECAUTIONS SUPPLIED WITH YOUR FRONT RUNNER PRODUCT PRIOR TO INSTALLATION OR USE. IF YOU DO NOT UNDERSTAND ALL OF THE INSTRUCTIONS AND CAUTIONS, OR IF YOU HAVE NO MECHANICAL EXPERIENCE AND ARE NOT THOROUGHLY FAMILIAR WITH THE INSTALLATION PROCEDURES, YOU SHOULD HAVE THE PRODUCT INSTALLED BY A PROFESSIONAL INSTALLER OR OTHER QUALIFIED PERSONNEL.

NOTE: Front Runner will not be responsible for any damage caused by the failure to install the product according to these instructions.

Please call us if you have any questions about the installation of this product.

 © 2021 FRONT RUNNER VEHICLE OUTFITTERS

1 GET ORGANIZED

IN THE BOX		
1	1 X	Rear Left Deck
2	1 X	Front Left Deck
3	1 X	Front Right Deck
4	1 X	Rear Right Deck
5	1 X	Front Plate LH Side
6	1 X	Front Plate RH Side
7	1 X	Face Plate / Narrow LHS
8	1 X	Face Plate / Narrow RHS
9	2 X	Carb03
10	2 X	Finishing Washer M6
11	2 X	M6 x 30 CSK Socket Screw
12	4 X	M6 x 16 Button head
13	4 X	M6 Nyloc Nut
14	4 X	M6 Nut Cap

TOOLS NEEDED

FIGURE 1.1

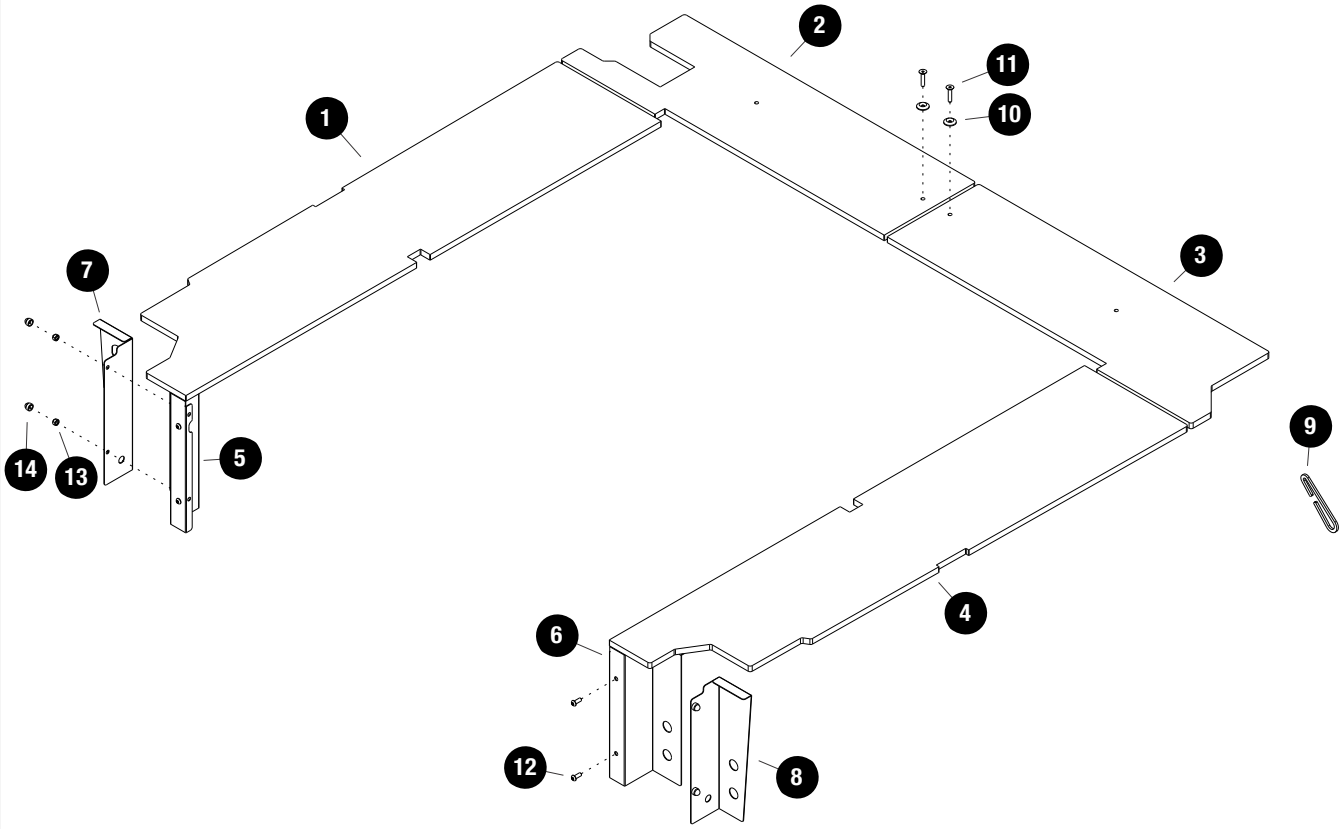

 © 2021 FRONT RUNNER VEHICLE OUTFITTERS

2 FIT AND SECURE

2.1

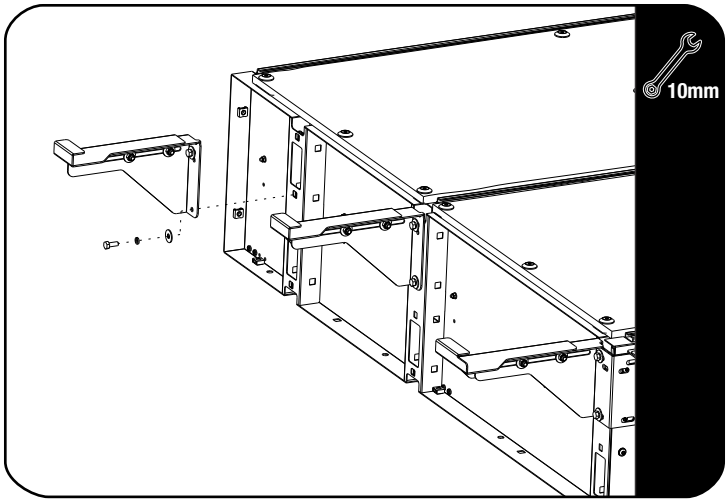

Secure the three LH / RH Side Wings (SSWS001) to the drawer system, using M6x20 Hex Bolts, M6 Spring Washers & M6x19 Flat Washers.

2.2

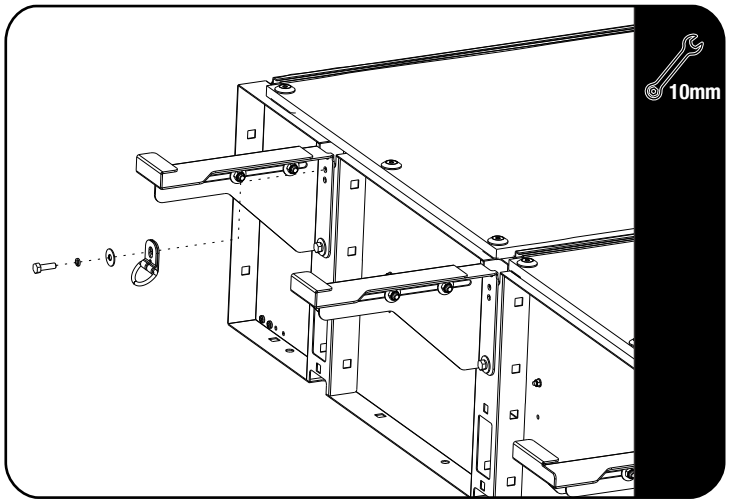

Secure the D-Rings, using the fasteners supplied with the drawer system (SSDR010) as shown. Two on the right and two on the left hand side.

2.3

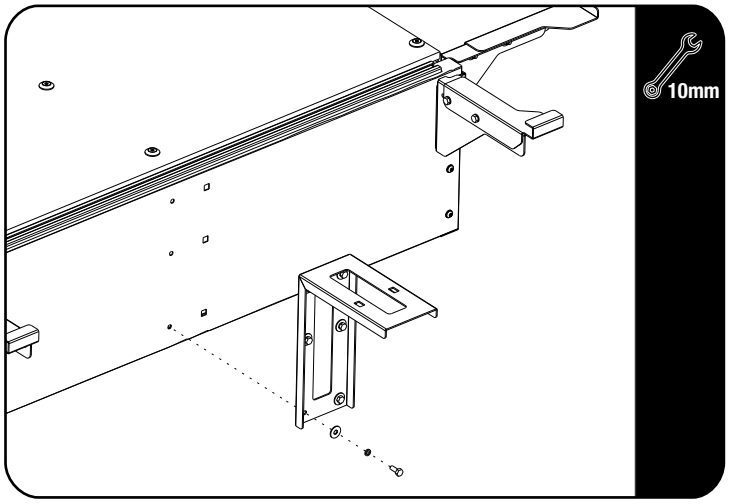

Secure the Rear Wing Sets as shown, using M6x20 Hex Bolts, M6 Spring Washers & M6x19 Flat Washers.

© 2021 FRONT RUNNER VEHICLE OUTFITTERS

2 FIT AND SECURE

2.4

Center the drawer in the load bed.

2.5

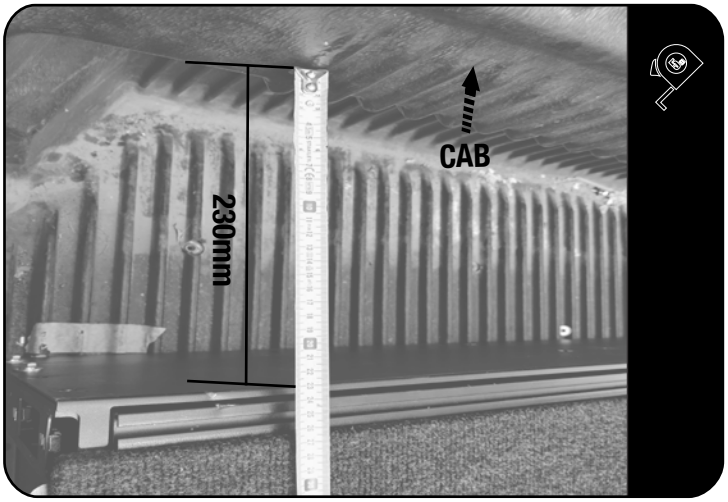

Position the drawer 230mm from the back of the cab as shown.

2.6

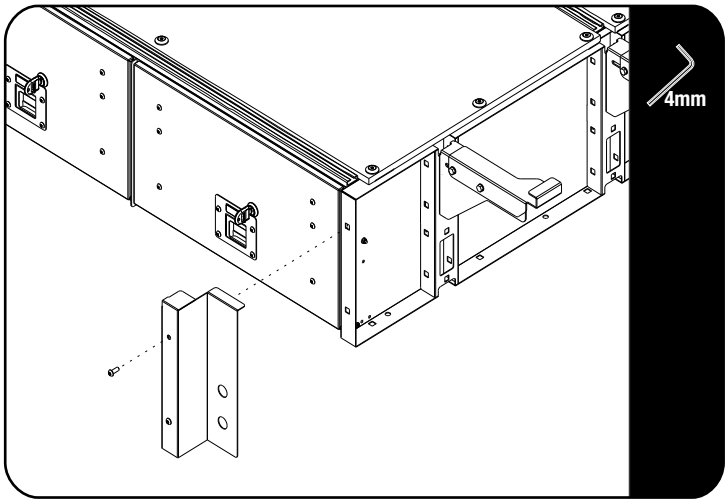

Secure the two Face Plates LH / RH (Item 5 & 6) to the drawer using four M6x12 Button Head Screws (Item 12).

© 2021 FRONT RUNNER VEHICLE OUTFITTERS

2 FIT AND SECURE

2.7

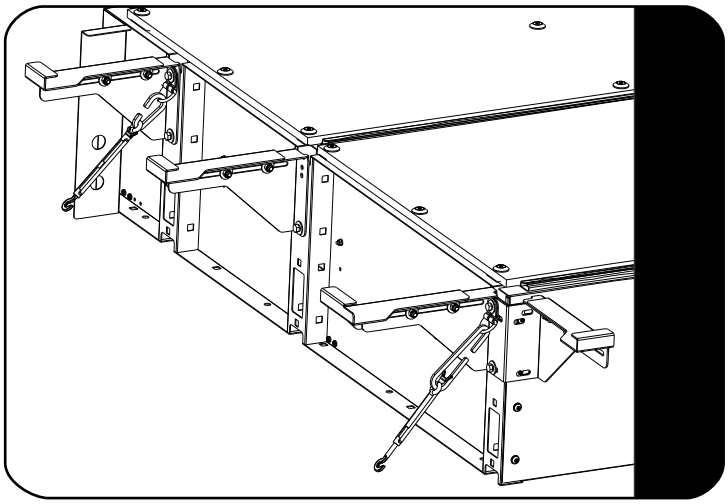

Secure the Drawer System in position using the Turnbuckles (supplied with SSDR010) and Carabiner (Item 9) as shown.

2.8

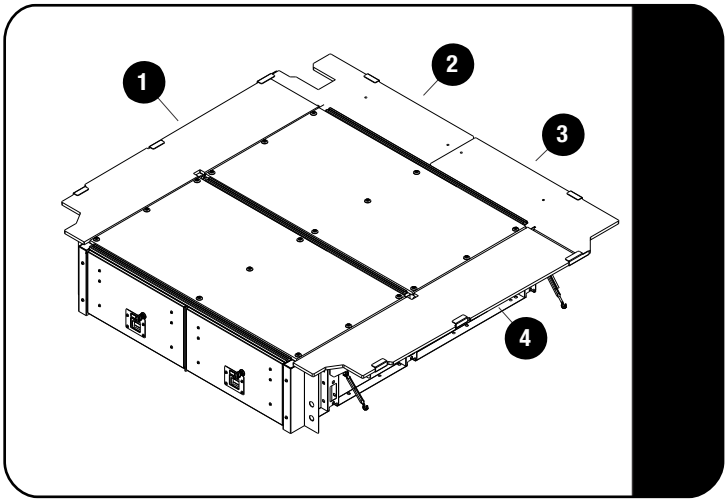

Place the relevant deck sets in place as shown, making sure that you slide it into the C-clip of the Side Wings.

3 FINISH

Congratulations! You did it. Take a step back and admire your work!

4 INSTALL OTHER VEHICLE AND RACK ACCESSORIES

Now's the time to visit your favorite Front Runner Dealer in person or online.

Be sure to tag us. We love to see our gear in action! #FrontRunnerOutfitters #BornToRoam

Share your adventures on:

© 2021 FRONT RUNNER VEHICLE OUTFITTERS