FRONT RUNNER
VEHICLE OUTFITTERS

LAND ROVER NEW DEFENDER 110 (L663) DECK COMPLETION SET

ENG

SSDS124

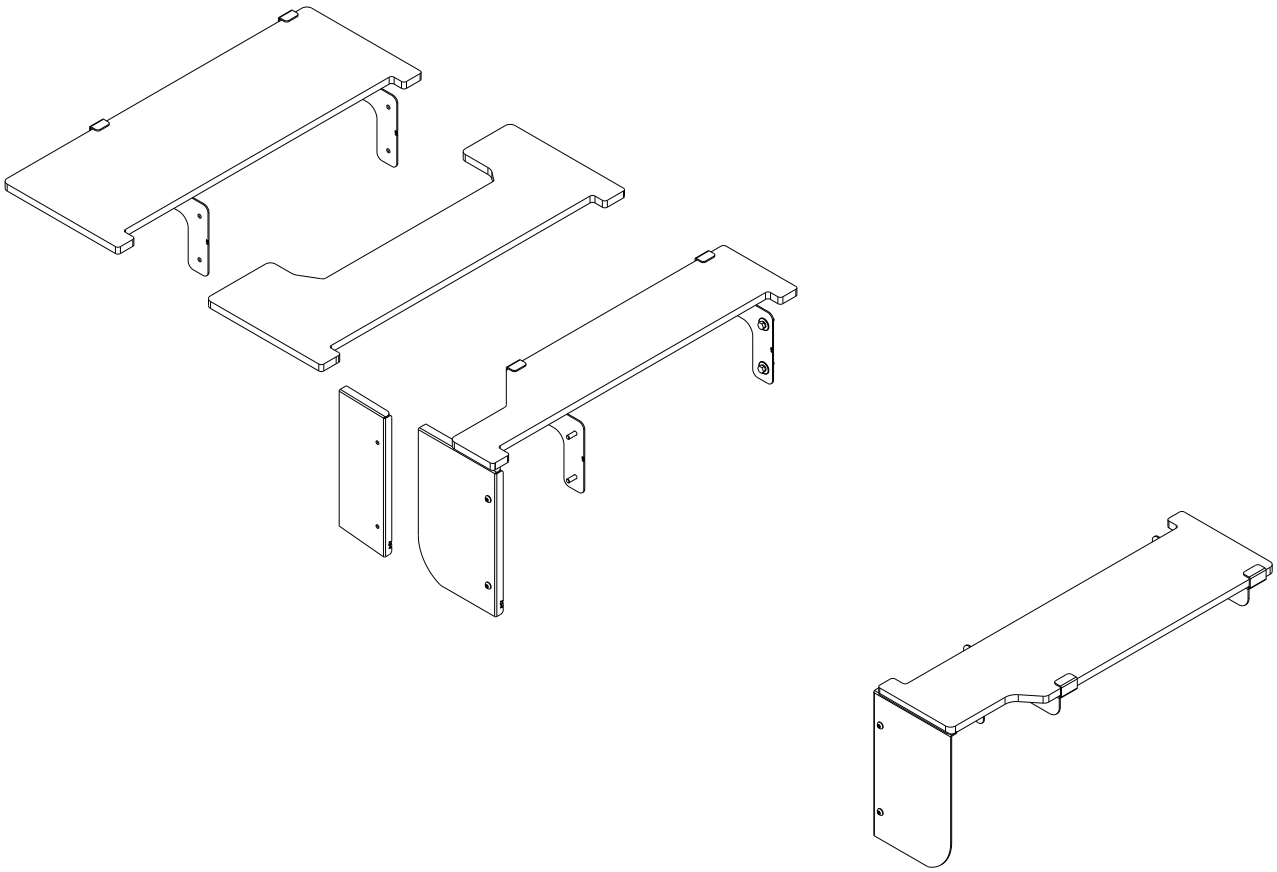

READ ME !

Thank you for purchasing a Front Runner Deck Completion Set.

Before you start, take a moment to familiarize yourself with this Fitting Instruction and the components received.

Refer to Page 2 for a list of all the components, quantities and tools required.

IMPORTANT WARNING!

IT IS CRITICAL THAT ALL FRONT RUNNER PRODUCTS BE PROPERLY AND SECURELY ASSEMBLED AND ATTACHED TO YOUR VEHICLE. IMPROPER ATTACHMENT COULD RESULT IN AN AUTOMOBILE ACCIDENT, AND COULD CAUSE SERIOUS BODILY INJURY OR DEATH. YOU ARE RESPONSIBLE FOR ASSEMBLING AND SECURING ALL FRONT RUNNER PRODUCTS TO YOUR VEHICLE, CHECKING THE ATTACHMENTS PRIOR TO USE, AND PERIODICALLY INSPECTING THE PRODUCTS FOR ADJUSTMENT, WEAR AND DAMAGE. THEREFORE, YOU MUST READ AND UNDERSTAND ALL OF THE INSTRUCTIONS AND PRECAUTIONS SUPPLIED WITH YOUR FRONT RUNNER PRODUCT PRIOR TO INSTALLATION OR USE. IF YOU DO NOT UNDERSTAND ALL OF THE INSTRUCTIONS AND CAUTIONS, OR IF YOU HAVE NO MECHANICAL EXPERIENCE AND ARE NOT THOROUGHLY FAMILIAR WITH THE INSTALLATION PROCEDURES, YOU SHOULD HAVE THE PRODUCT INSTALLED BY A PROFESSIONAL INSTALLER OR OTHER QUALIFIED PERSONNEL.

NOTE: Front Runner will not be responsible for any damage caused by the failure to install the product according to these instructions.

Please call us if you have any questions about the installation of this product.

© 2021 FRONT RUNNER VEHICLE OUTFITTERS

1 GET ORGANIZED

IN THE BOX		
1	1 X	Side Deck LH (Compressor Option)
2	2 X	Side Wing LH (Short)
3	1 X	Side Deck RH
4	2 X	Side Wing RH
5	8 X	M6 x 20 Hex Head Bolt
6	8 X	M6 Spring Washer
7	8 X	M6 x 19 x 1SS Flat Washer
8	1 X	Face Plate RH
9	4 X	M6 x 12 Button Head Screw
10	1 X	Face Plate LH
11	1 X	Side Deck LH (Storage/Tank Option)
12	2 X	Side Wing LH (Long)
13	1 X	Side Deck LH
14	4 X	Carabiner 37mm
15	1 X	Front Face Small

TOOLS NEEDED

FIGURE 1.1

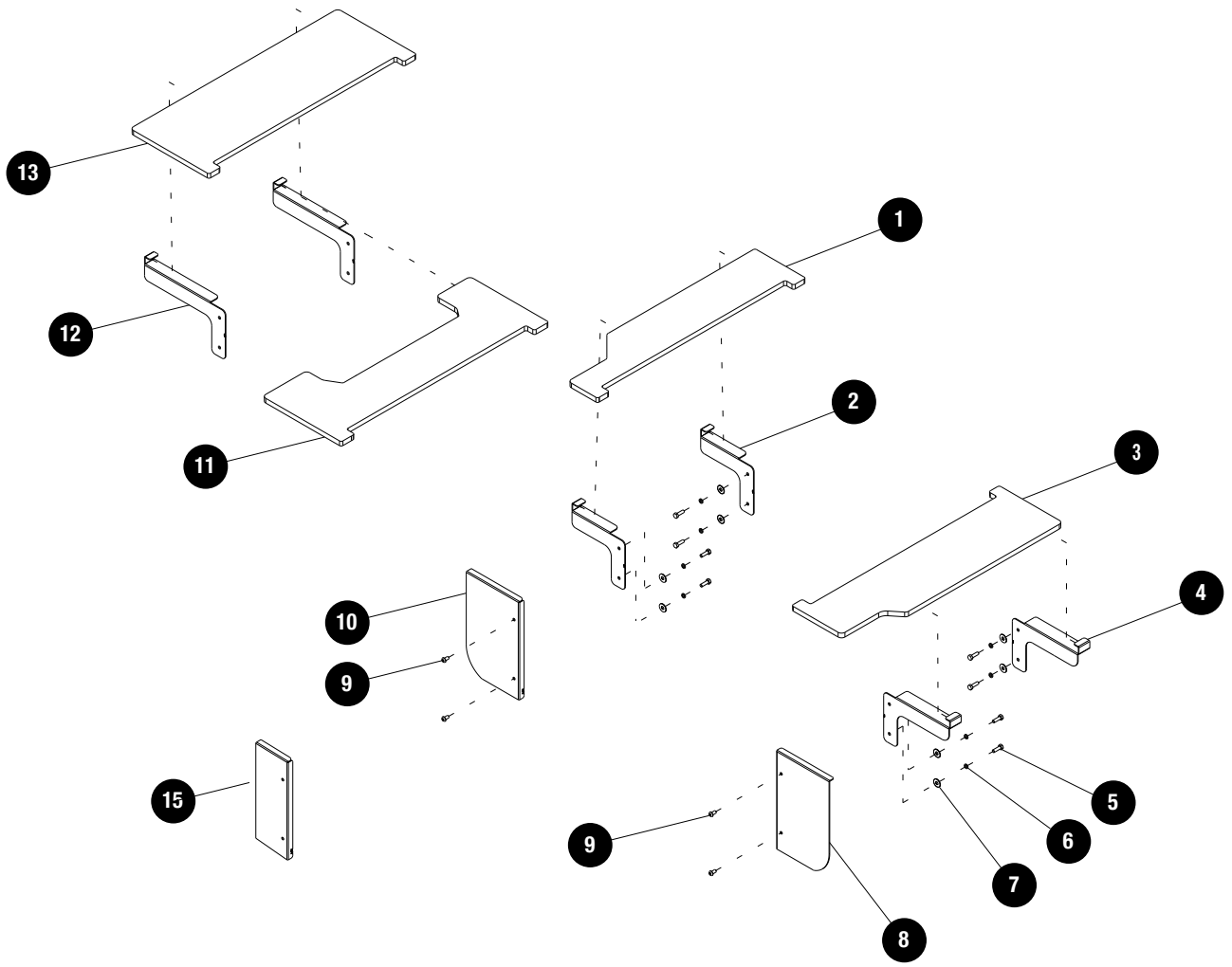

 © 2021 FRONT RUNNER VEHICLE OUTFITTERS

2 FIT AND SECURE

2.1

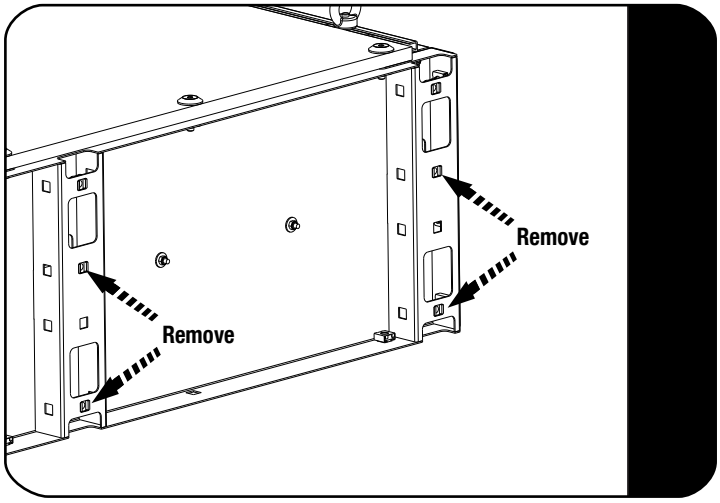

Before positioning the Drawer System (SSDR011) in the vehicle, unclip the four Cage Nuts as shown to relocate. Do this on both left and right side.

2.2

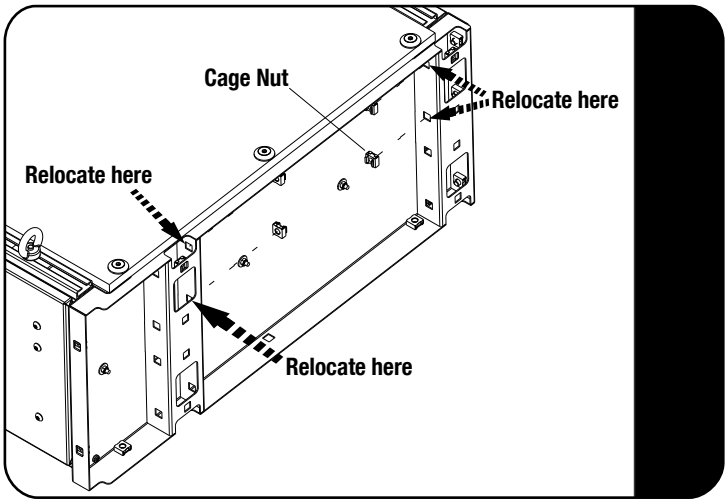

Relocate the Cage Nuts to the position shown on both sides of the drawer.

2.3

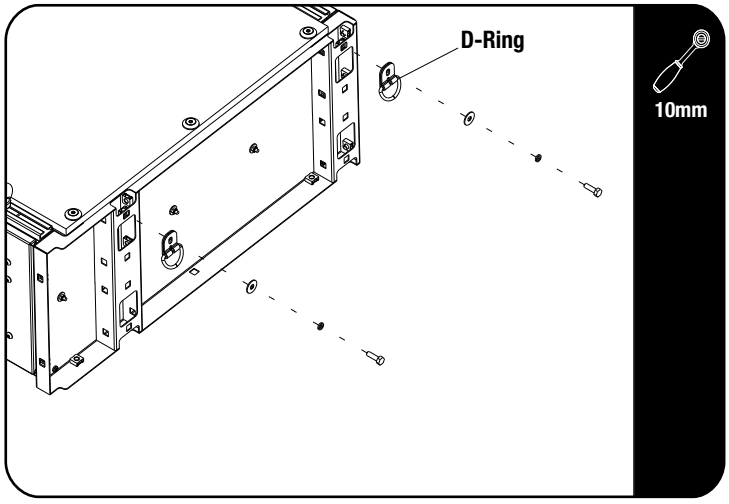

Secure the D-Rings, using the fasteners, supplied with the Drawer System (SSDR011) as shown. Two on the right hand side and two on the left hand side.

Do this on both sides of the drawer.

© 2021 FRONT RUNNER VEHICLE OUTFITTERS

2 FIT AND SECURE

2.4

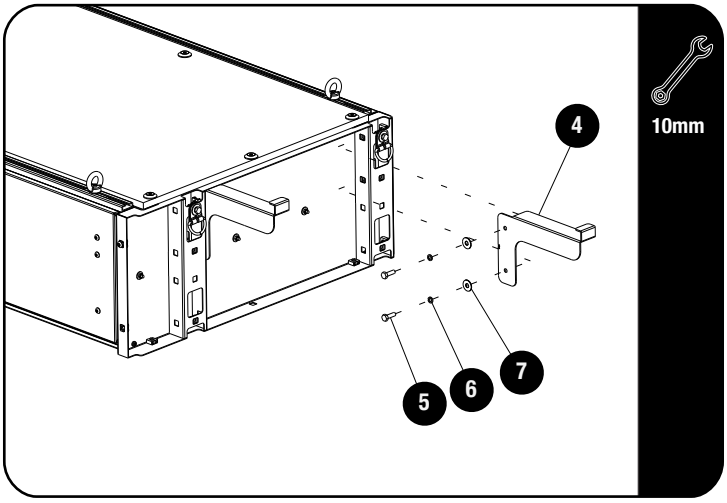

Secure the two RH Side Wings (Item 4) to the right side of the Drawer System using four M6x19x1SS Flat Washers, four M6 Spring Washers and four M6x20 Hex Head Bolts (Item 7, 6 & 5)

2.5

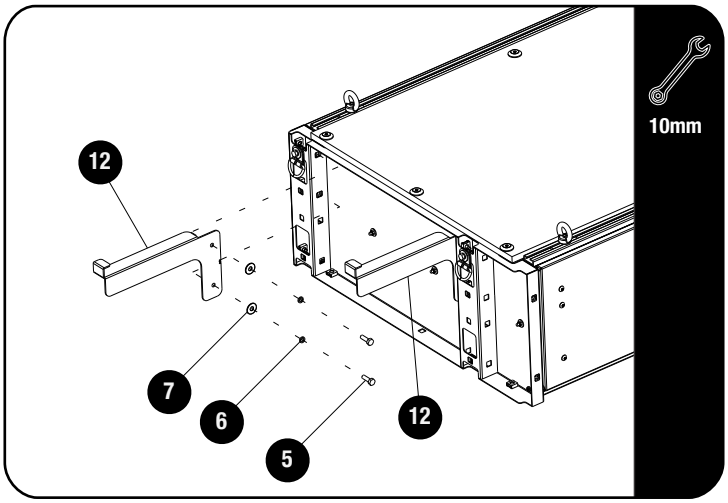

FITMENT IN VEHICLE WITHOUT COMPRESSOR INSTALLED.

A **Secure the longer two LH Side Wings (Item 12) to the Drawer System using four M6x19x1SS Flat Washers, four M6 Spring Washers and four M6x20 Hex Head Bolts (Item 7, 6 & 5)**

2.6

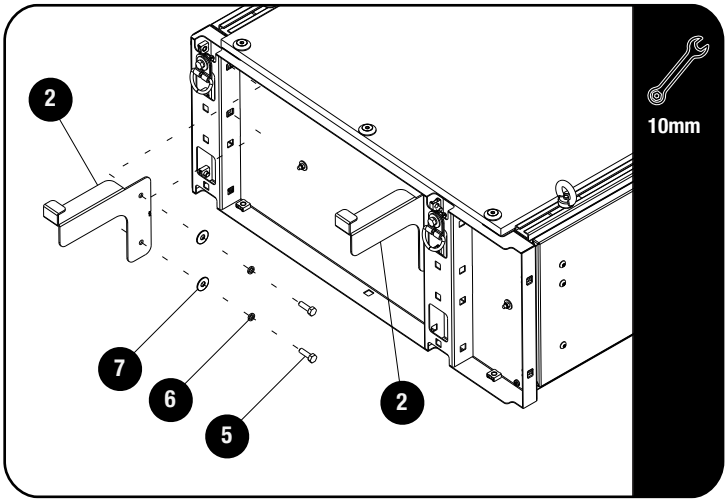

FITMENT IN VEHICLE WITH COMPRESSOR INSTALLED

B **Secure the two LH Side Wings (Item 2) to the left side of the Drawer System using four M6x19x1SS Flat Washers, four M6 Spring Washers and four M6x20 Hex Head Bolts (Item 7, 6 & 5)**

© 2021 FRONT RUNNER VEHICLE OUTFITTERS

2 FIT AND SECURE

2.7

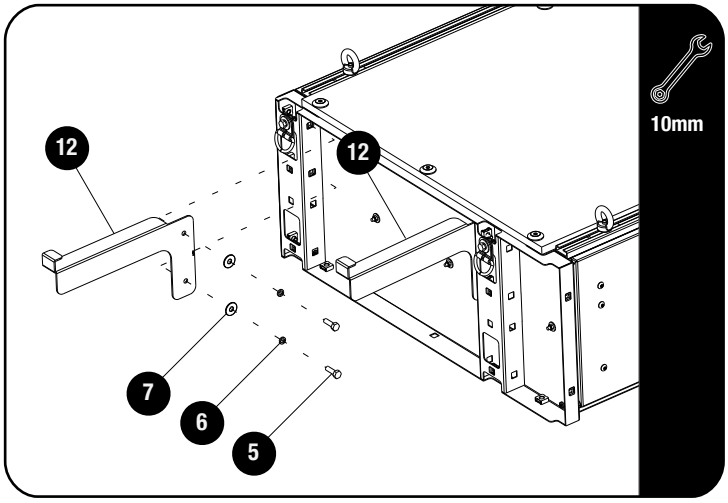

FITMENT IN VEHICLE WITH STORAGE UNIT

C Secure the two LH Side Wing (Item 12) to the Drawer System using four M6x19x1SS Flat Washers, four M6 Spring Washers and four M6x20 Hex Head Bolts (Item 7, 6 & 5)

2.8

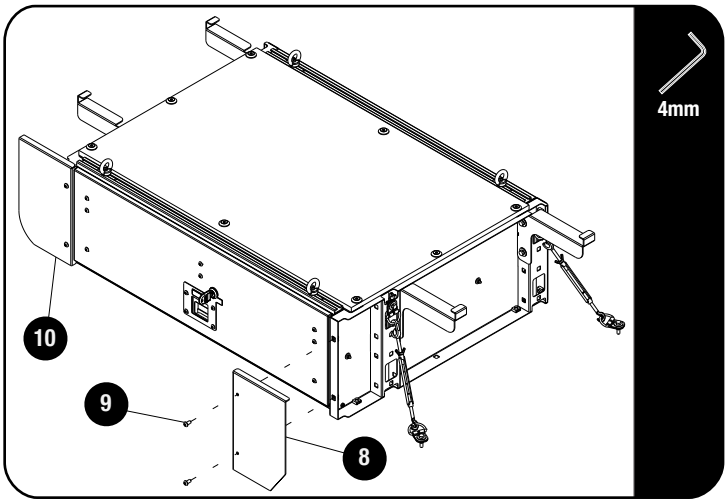

Secure the RH Face Plate (Item 8) and LH Face Plate (Item 10) to the Drawer using four M6 x 12 Button Head Screw (Item 9).

Secure the Drawer System in position using the Turn Buckles (supplied with SSDR011) and Carabiner (Item 14) as shown.

2.9

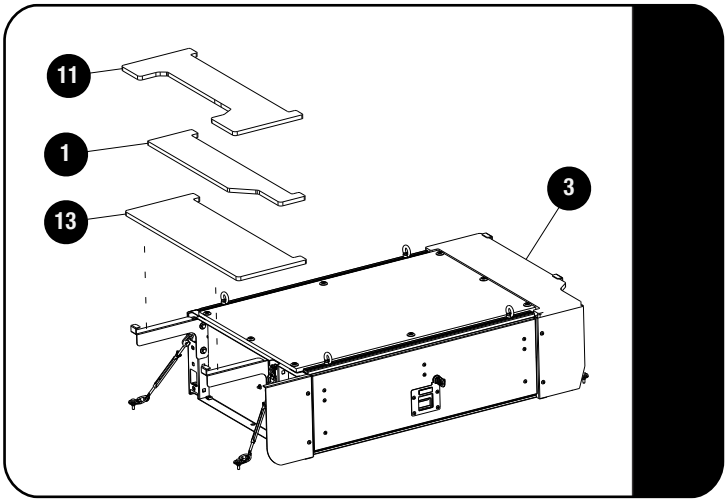

Depending on the combination of Wing Sets used during fitment:

A Use LH Side Deck (Item 13) with the Wing Set assembly in 2.5.

B Use LH Side Deck (Item 1) with the Wing Set assembly in 2.6.

C Use LH Side Deck (Item 11) with the Wing Set assembly in 2.7

Place the relevant LH Side Deck and the RH Side Deck (Item 3) onto the Drawer making sure that you slide it into the C-clip of the Side Wings.

 © 2021 FRONT RUNNER VEHICLE OUTFITTERS

3 COMPLETION

Congratulations! You did it. Take a step back and admire your work!

4 INSTALL OTHER VEHICLE AND RACK ACCESSORIES

Now's the time to visit your favorite Front Runner Dealer in person or online.

Be sure to tag us. We love to see our gear in action! #FrontRunnerOutfitters #BornToRoam

Share your adventures on:

© 2021 FRONT RUNNER VEHICLE OUTFITTERS