FRONT RUNNER

SUZUKI JIMNY (2018 - CURRENT) DECK COMPLETION SET

ENG

SSDS122

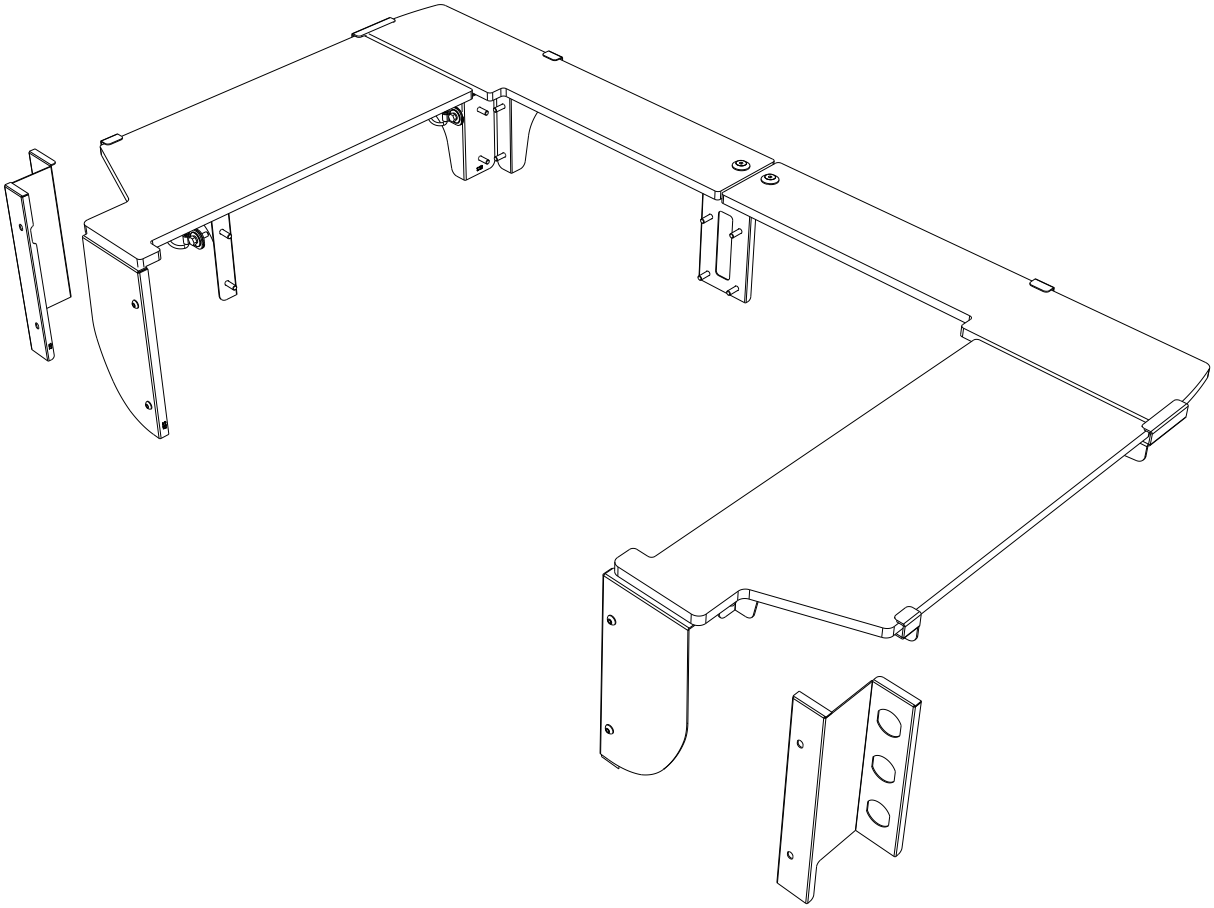

READ ME !

Thank you for purchasing a Front Runner Deck Completion Set.

Before you start, take a moment to familiarize yourself with the Fitting Instructions and the components received.

Refer to Page 2 for a list of all the components, quantities and tools required.

IMPORTANT WARNING!

IT IS CRITICAL THAT ALL FRONT RUNNER PRODUCTS BE PROPERLY AND SECURELY ASSEMBLED AND ATTACHED TO YOUR VEHICLE. IMPROPER ATTACHMENT COULD RESULT IN AN AUTOMOBILE ACCIDENT, AND COULD CAUSE SERIOUS BODILY INJURY OR DEATH. YOU ARE RESPONSIBLE FOR ASSEMBLING AND SECURING ALL FRONT RUNNER PRODUCTS TO YOUR VEHICLE, CHECKING THE ATTACHMENTS PRIOR TO USE, AND PERIODICALLY INSPECTING THE PRODUCTS FOR ADJUSTMENT, WEAR AND DAMAGE. THEREFORE, YOU MUST READ AND UNDERSTAND ALL OF THE INSTRUCTIONS AND PRECAUTIONS SUPPLIED WITH YOUR FRONT RUNNER PRODUCT PRIOR TO INSTALLATION OR USE. IF YOU DO NOT UNDERSTAND ALL OF THE INSTRUCTIONS AND CAUTIONS, OR IF YOU HAVE NO MECHANICAL EXPERIENCE AND ARE NOT THOROUGHLY FAMILIAR WITH THE INSTALLATION PROCEDURES, YOU SHOULD HAVE THE PRODUCT INSTALLED BY A PROFESSIONAL INSTALLER OR OTHER QUALIFIED PERSONNEL.

NOTE: Front Runner will not be responsible for any damage caused by the failure to install the product according to these instructions.

Please call us if you have any questions about the installation of this product.

© 2020 FRONT RUNNER VEHICLE OUTFITTERS

1 GET ORGANIZED

IN THE BOX

1	2 X	Side Deck - 1LH + 1RH
2	2 X	Rear Deck - 1LH + 1RH
3	2 X	Front Face With Knock-Outs - 1LH + 1RH
4	2 X	Front Face - 1LH + 1RH
5	2 X	Front Side Wing - 1LH + 1RH
6	2 X	Rear Side Wing - 1LH + 1RH
7	2 X	Rear Wing - 1LH + 1RH
8	1 X	Middle Support
9	16 X	M6 x 12 x 1SS Flat Washer
10	20 X	M6 SS Spring Washer
11	20 X	M6 x 20 Hex Bolt
12	2 X	M6 Finishing Washer
13	2 X	M6 x 30 Counter Sink Screw
14	4 X	M8 D-Ring
15	4 X	M6 x 19 x 1SS Flat Washer
16	4 X	M6 x 16 Button Head Bolt
17	2 X	M6 Cage Nut
18	4 X	M6 x 35 Hex Bolt
19	4 X	Small Carabiner

TOOLS NEEDED

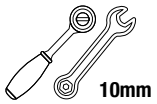

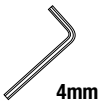

FIGURE 1.1

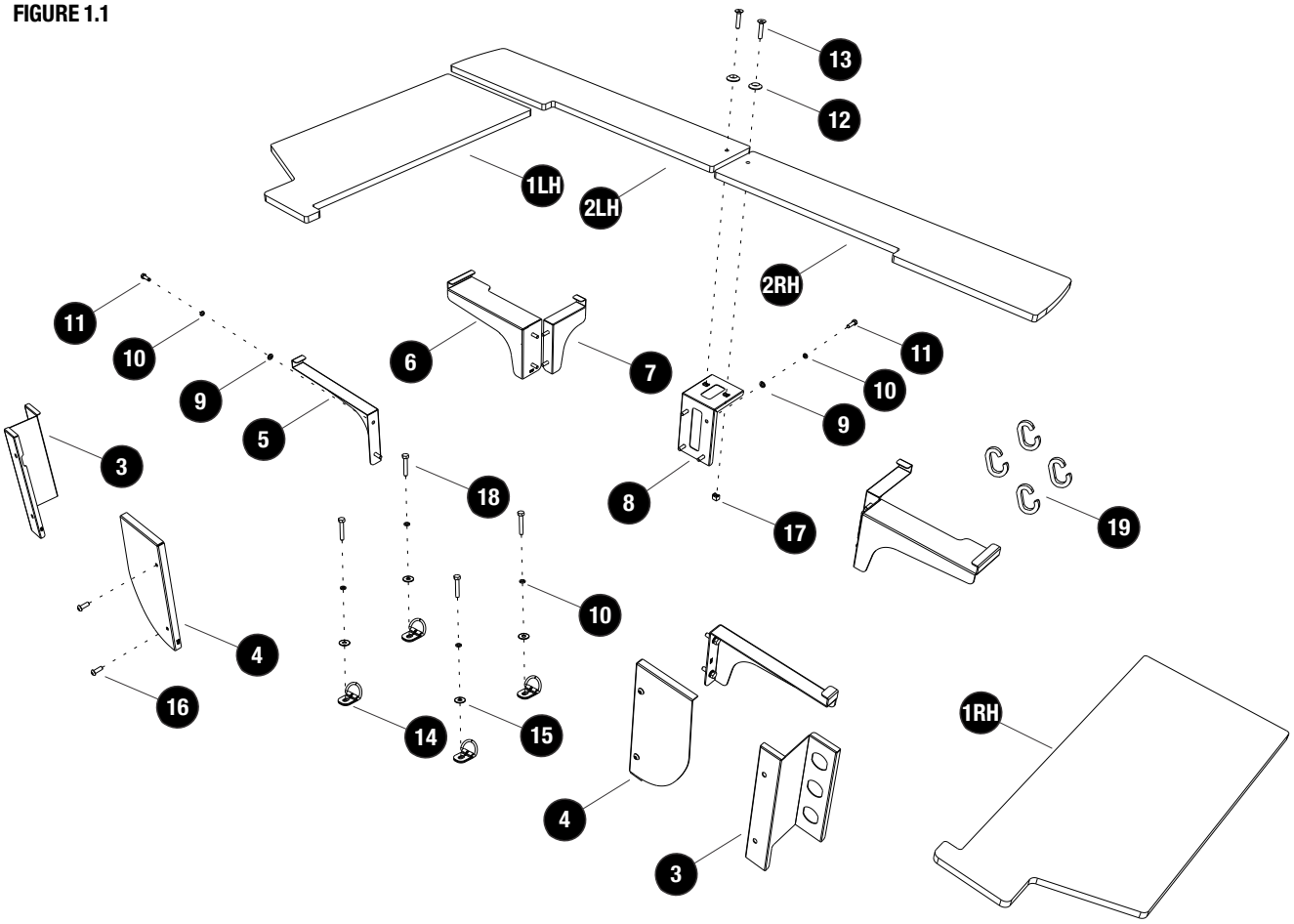

 © 2020 FRONT RUNNER VEHICLE OUTFITTERS

2 FIT AND SECURE

2.1

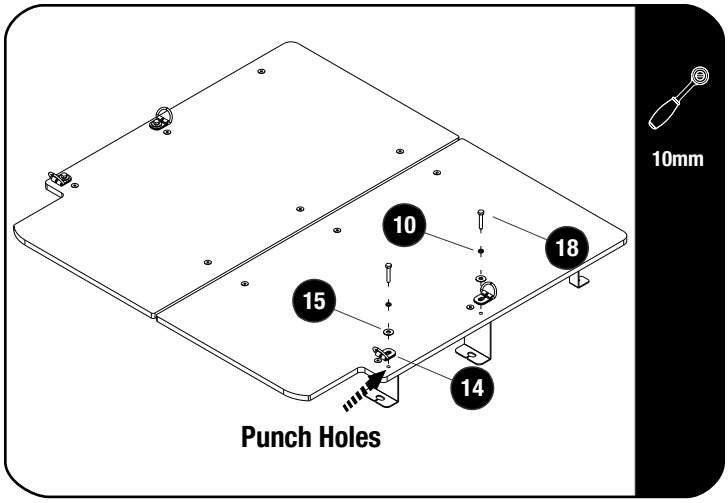

Before you start the fitment of the Deck Completion Set, the Base Deck (SSDS121) needs to be fitted.

Ensure that the mounting holes for the D-Rings are punched through the carpet.

Secure four D-Rings (Item 14) using M6 x 30 Hex Bolts, M6 SS Spring Washers and M6 x 19 x 1SS Flat Washers (Items 10, 15 & 18) into the Base Deck Bracket Cage Nut as shown.

Do this on both left and right side.

2.2

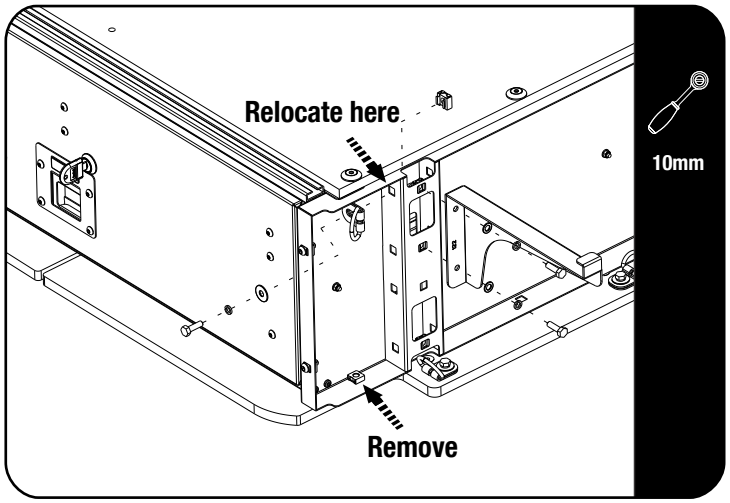

Before fitting the Side Wings to the Drawer, relocate the four cage nuts shown in 2.2 and 2.3 and fit the D-Rings supplied with the Drawer (SSDR011). There are two cage nuts on each side of the drawer.

2.3

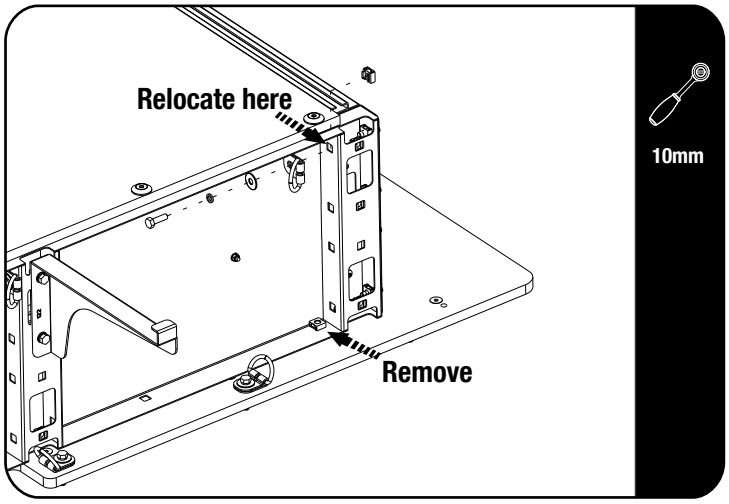

Relocate the cage nuts.

© 2020 FRONT RUNNER VEHICLE OUTFITTERS

2 FIT AND SECURE

2.4

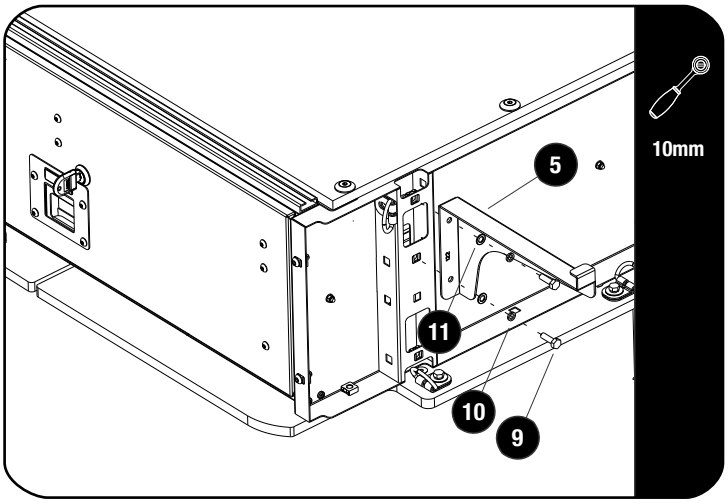

Fit the Front Side Wing (Item 5) to the Drawer using M6 x 20 Hex Bolts, M6 SS Spring Washers & M6 x 12 x 1 SS Flat Washers (Items 9, 10 & 11) as shown.

2.5

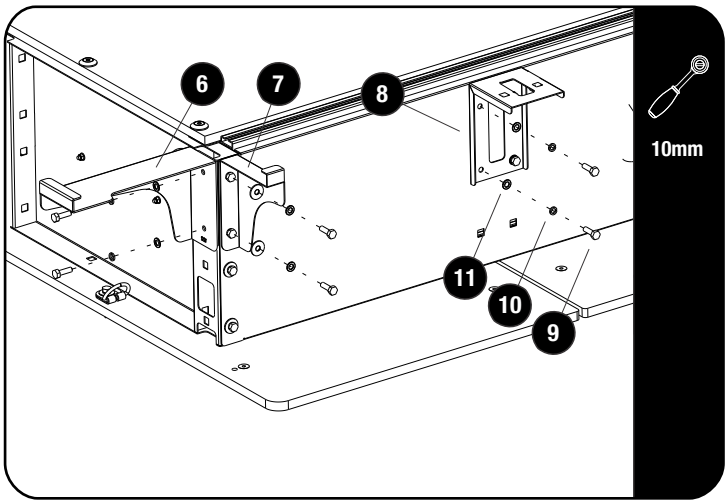

Fit the Rear Side Wing, Rear Wing & Middle Support (Items 6, 7 & 8) to the Drawer using M6 x 20 Hex Bolts, M6 SS Spring Washers and M6 x 12 x 1 SS Flat Washers (Items 9, 10 & 11) as shown.

2.6

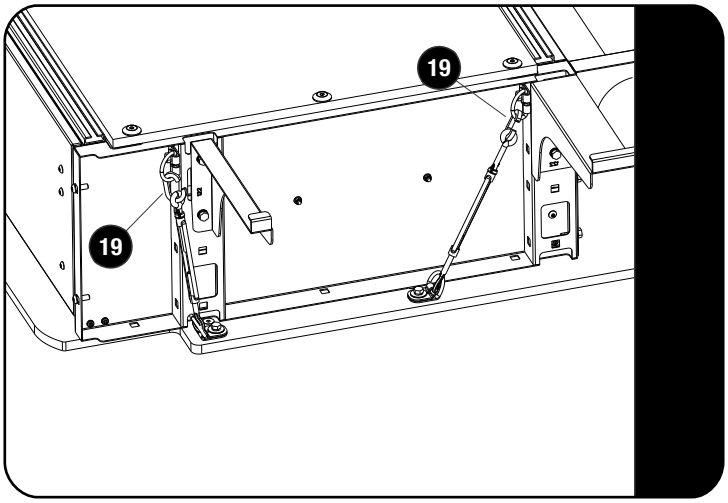

Place the Side Decks (Items 1LH & 1RH) on Drawer to position the Drawer in the vehicle. Ensure that the Side Decks follow the contours of the panel inside the vehicle, this will center the Drawer left to right and back to front.

After the Drawer is in position, remove the Side Decks.

Secure the Drawer to the Base Deck using the Small Carabiners (Item 19) and the turnbuckles supplied with the Drawer (SSDR011).

Use the wing nuts on the turnbuckles to lock them.

© 2020 FRONT RUNNER VEHICLE OUTFITTERS

2 FIT AND SECURE

2.7

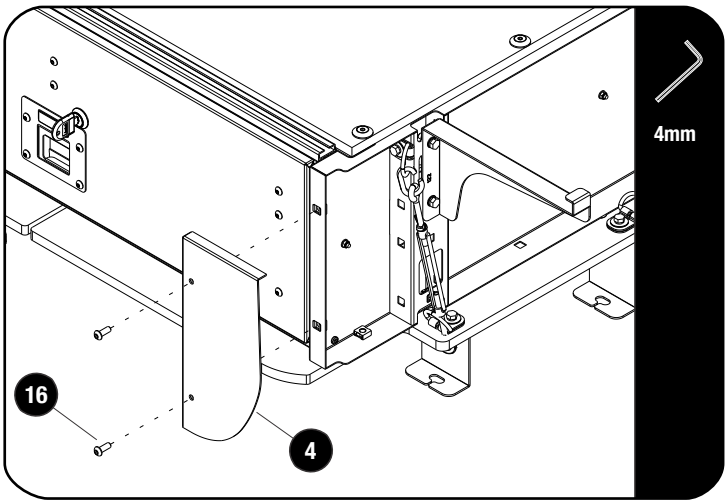

Secure the Front Face Plates (Item 3LH & 3RH) to the Drawer using M6 x 16 Button Head Bolts (Item 16) as shown.

If you want to fit electrical sockets, use the Face Plates With Knock-Outs (Item 3). Socket Inserts (sold separately) can be installed into this Face Plate.

ECOM117 - Amp Meter
ECOM118 - USB Socket
ECOM119 - 12/24V Socket
ECOM120 - Merit Socket
ECOM121 - Engel Socket
ECOM124 - Volt Meter

2.8

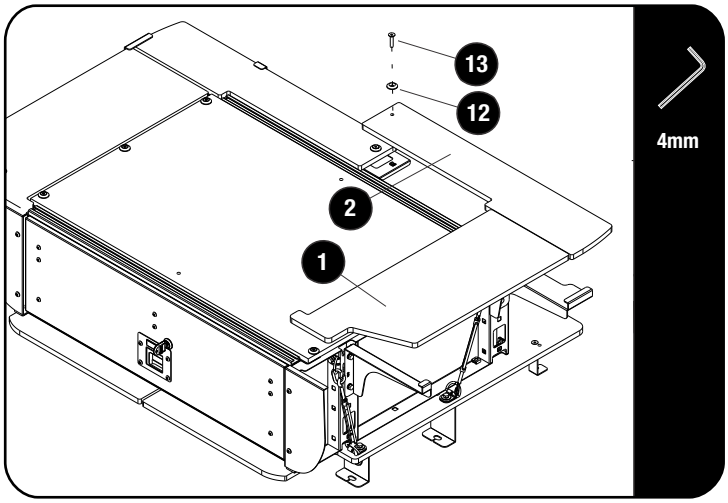

Fit the Side Decks and Rear Decks (Items 1 & 2) to the Drawer by placing them into the C-Clips and pushing downward. Secure the middle of the Rear Decks using M6 x 30 Countersink Screws and M6 Finishing Washers (Items 12 & 13) as shown.

3 FINISH

Congratulations! You did it. Take a step back and admire your work!

4 INSTALL OTHER VEHICLE AND RACK ACCESSORIES

Now's the time to visit your favorite Front Runner Dealer in person or online.

Be sure to tag us. We love to see our gear in action! #FrontRunnerOutfitters #BornToRoam

Share your adventures on:

© 2020 FRONT RUNNER VEHICLE OUTFITTERS

2.7