FRONT RUNNER

TOYOTA LAND CRUISER 79 DC DRAWER DECK COMPLETION SET

ENG

SSDS120

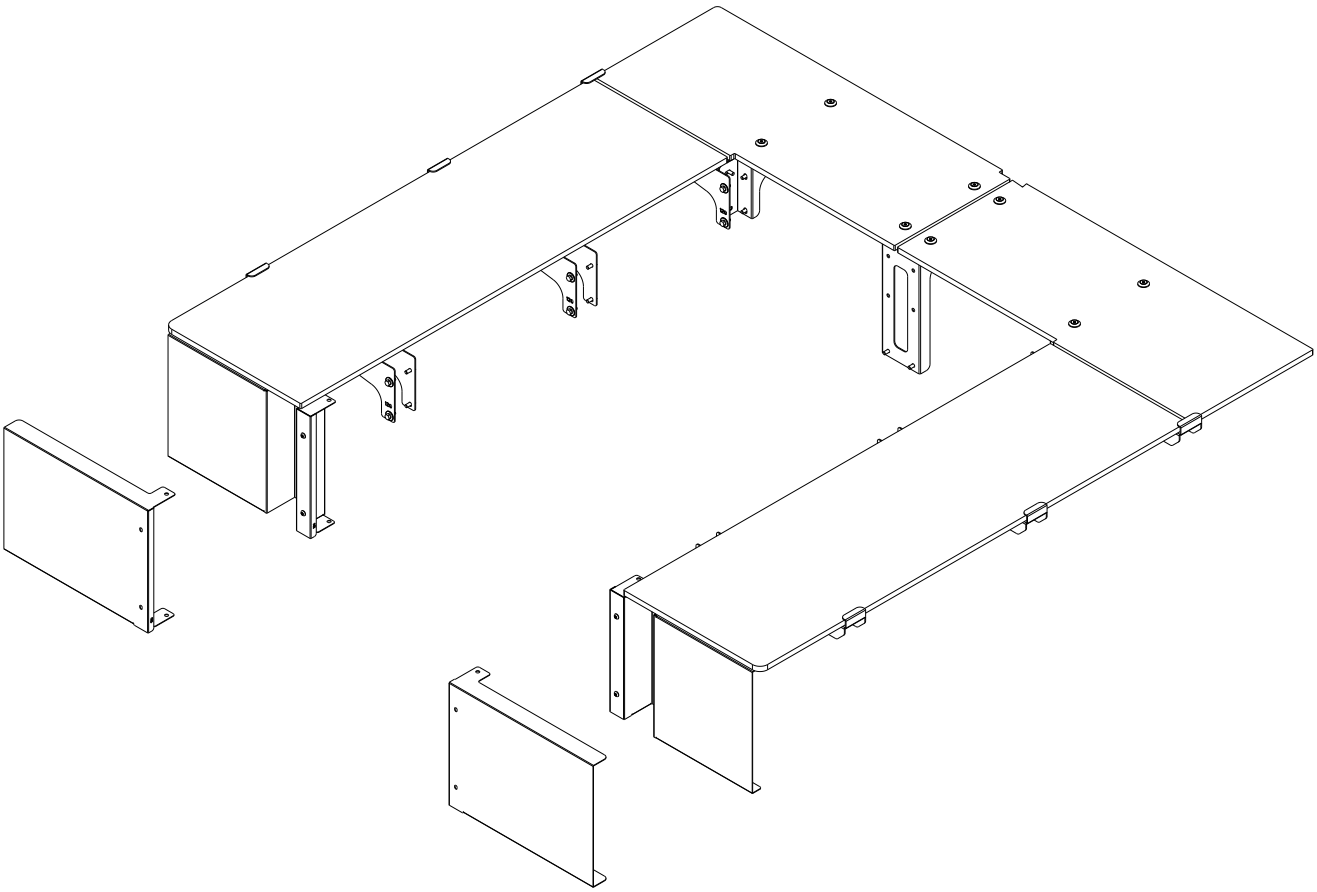

READ ME !

Thank you for purchasing a Front Runner Deck Completion Set.

Before you start, take a moment to familiarize yourself with the Fitting Instructions and the components received.

Refer to Page 2 for a list of all the components, quantities and tools required.

IMPORTANT WARNING!

IT IS CRITICAL THAT ALL FRONT RUNNER PRODUCTS BE PROPERLY AND SECURELY ASSEMBLED AND ATTACHED TO YOUR VEHICLE. IMPROPER ATTACHMENT COULD RESULT IN AN AUTOMOBILE ACCIDENT, AND COULD CAUSE SERIOUS BODILY INJURY OR DEATH. YOU ARE RESPONSIBLE FOR ASSEMBLING AND SECURING ALL FRONT RUNNER PRODUCTS TO YOUR VEHICLE, CHECKING THE ATTACHMENTS PRIOR TO USE, AND PERIODICALLY INSPECTING THE PRODUCTS FOR ADJUSTMENT, WEAR AND DAMAGE. THEREFORE, YOU MUST READ AND UNDERSTAND ALL OF THE INSTRUCTIONS AND PRECAUTIONS SUPPLIED WITH YOUR FRONT RUNNER PRODUCT PRIOR TO INSTALLATION OR USE. IF YOU DO NOT UNDERSTAND ALL OF THE INSTRUCTIONS AND CAUTIONS, OR IF YOU HAVE NO MECHANICAL EXPERIENCE AND ARE NOT THOROUGHLY FAMILIAR WITH THE INSTALLATION PROCEDURES, YOU SHOULD HAVE THE PRODUCT INSTALLED BY A PROFESSIONAL INSTALLER OR OTHER QUALIFIED PERSONNEL.

NOTE: Front Runner will not be responsible for any damage caused by the failure to install the product according to these instructions.

Please call us if you have any questions about the installation of this product.

 © 2019 FRONT RUNNER VEHICLE OUTFITTERS

1 GET ORGANIZED

IN THE BOX		
1	1 X	Side Deck LH
2	1 X	Rear Deck LH
3	1 X	Rear Deck RH
4	1 X	Side Deck RH
5	2 X	Front Face Plate 1LH + 1RH
6	2 X	Front Face Plate With ECOM Cut-Outs 1LH + 1RH
7	4 X	Front & Middle Side Wing
8	2 X	Rear Side Wing
9	2 X	Rear Wing 1LH + 1RH
10	1 X	Rear Support
11	8 X	Cage Nut
12	28 X	M6 x 19 x 1SS Flat Washer
13	28 X	M6 SS Spring Washer
14	28 X	M6 x 16 Hex Bolts

IN THE BOX		
15	8 X	M6 x 30 Countersink Screws
16	8 X	M6 Finishing Washers
17	4 X	M6 x 16 Button Head Bolts

TOOLS NEEDED

4mm

8mm
10mm

6.5mm

8mm
10mm

FIGURE 1.1

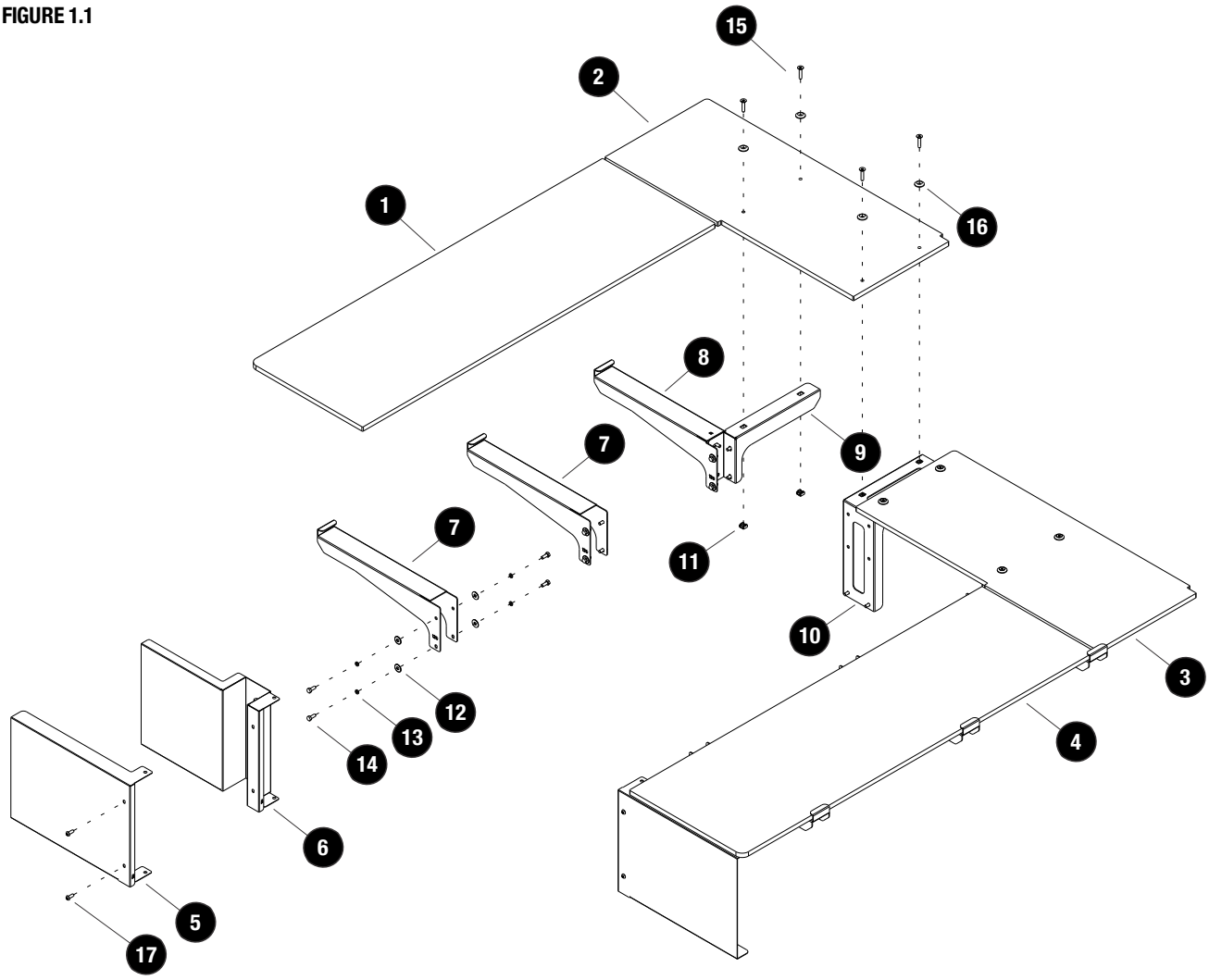

 © 2019 FRONT RUNNER VEHICLE OUTFITTERS

2 FIT AND SECURE

2.1

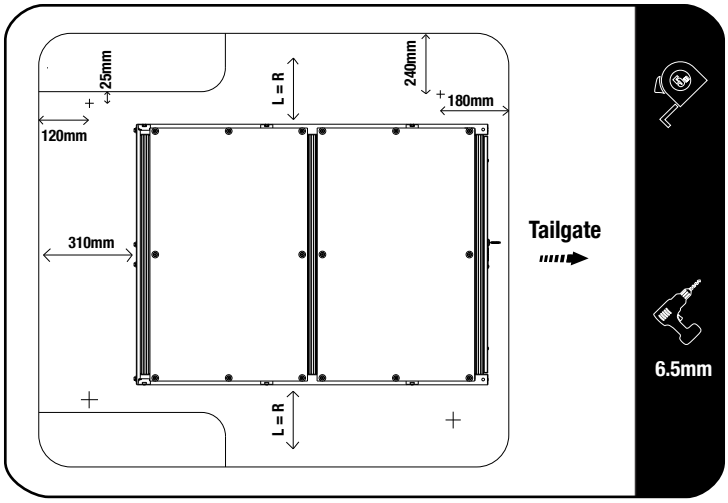

Place the drawer system in the load bed.

Center the drawer left to right and measure 310mm from the front of the load bed.

To mark the rear mounting hole, measure in 180mm from the tail gate and 240mm from the side of the load bed as shown.

To mark the front mounting hole, measure 120mm in from the front of the load bed and 25mm from the wheel arch as shown.

Do this on both sides of the vehicle.

Drill a 6.5mm hole on all four marks.

2.2

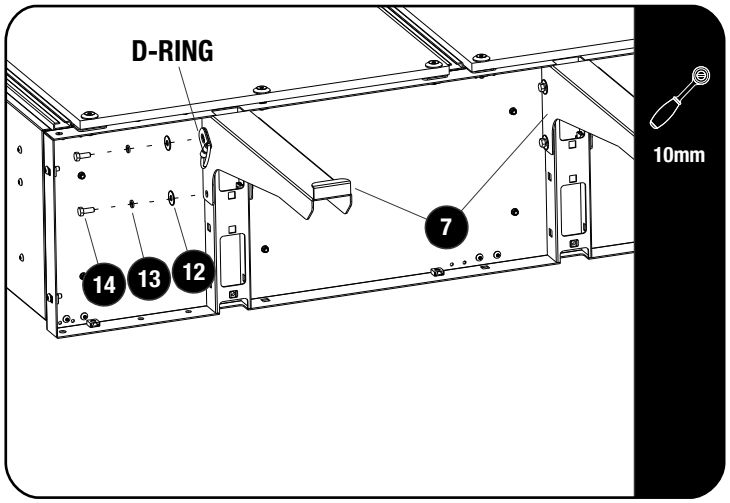

Fit the Front and Middle Side Wings (Item 7) to the drawer using M6 x 16 Hex Bolts, M6 SS Spring Washers and M6 x 19 x 1SS Flat Washers (Items 12, 13 & 14) as shown.

Fit the D-Ring to the front top hole on the Front Side Wing using an M6 x 20 Hex Bolt, M6 SS Spring Washer and M6 x 19 x 1SS Flat Washer (supplied with SSDR012) as shown.

Do this on both sides of the drawer.

2.3

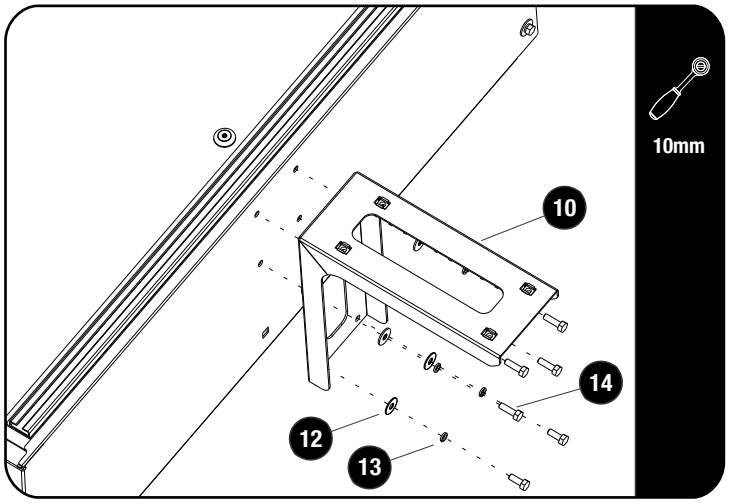

Looking at the rear of the drawer, fit the Rear Support (Item 10) using M6 x 16 Hex Bolts, M6 SS Spring Washers and M6 x 19 x 1 SS Flat Washers (Items 12, 13 & 14) as shown.

© 2019 FRONT RUNNER VEHICLE OUTFITTERS

2 FIT AND SECURE

2.4

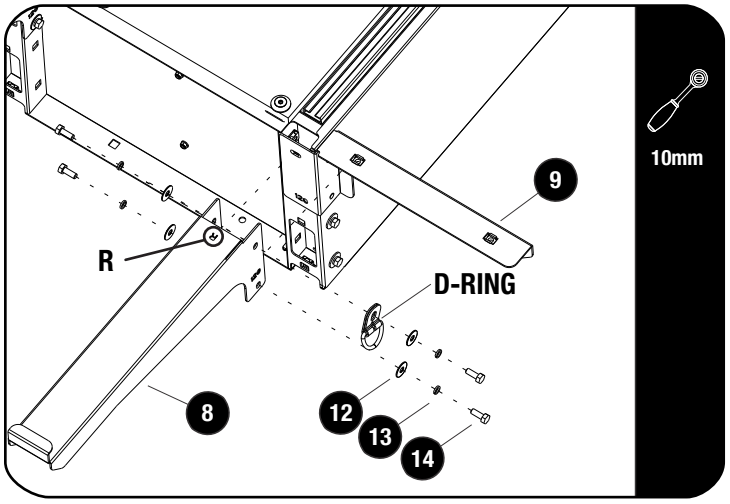

Fit the Rear Wing (Item 9) and the Rear Side Wing (Item 8) using M6 x 16 Hex Bolts, M6 SS Spring Washers and M6 x 19 x 1SS Flat Washers (Items 12, 13 & 14) as shown.

Fit the D-Ring to the rear top hole on the Rear Side Wings using an M6 x 20 Hex Bolt, M6 SS Spring Washer and M6 x 19 x 1SS Flat Washer (Supplied with SSDR012) as shown.

Do this on both sides of the drawer.

2.5

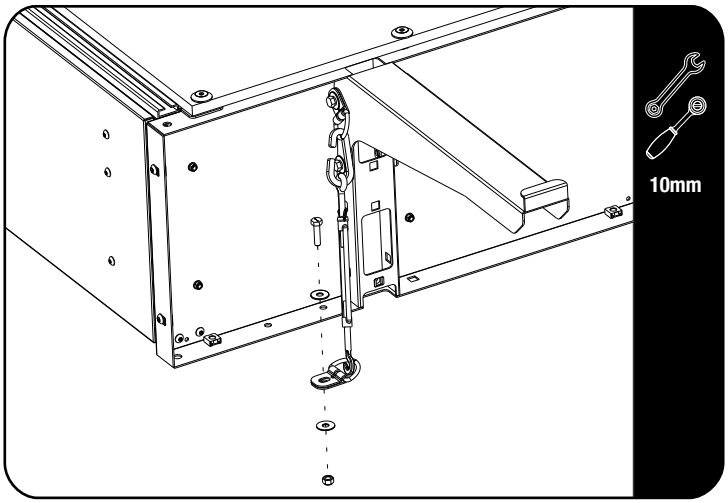

Secure the D-Rings (supplied with SSDR012) in the rear of the load bed through the holes drilled in 2.1 using M6 x 20 Hex Bolts, M6 x 19 x 1SS Flat Washers and M6 Nyloc Nuts (supplied with SSDR012) as shown.

Connect a carabiner to the D-Ring on the drawer followed by a turnbuckle as shown.

2.6

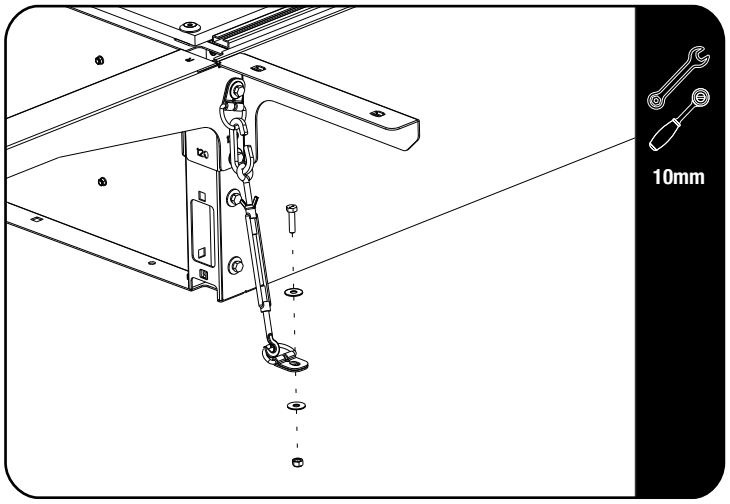

Secure the D-Rings (supplied with SSDR012) in the front of the load bed through the holes drilled in 2.1 using M6 x 20 Hex Bolts, M6 x 19 x 1SS Flat Washers and M6 Nyloc Nuts (supplied with SSDR012) as shown.

Connect a carabiner to the D-Ring on the drawer followed by a turnbuckle as shown.

Make sure the drawer is still in position (Refer to 2.1) before tensioning all four turnbuckles.

© 2019 FRONT RUNNER VEHICLE OUTFITTERS

2 FIT AND SECURE

2.7

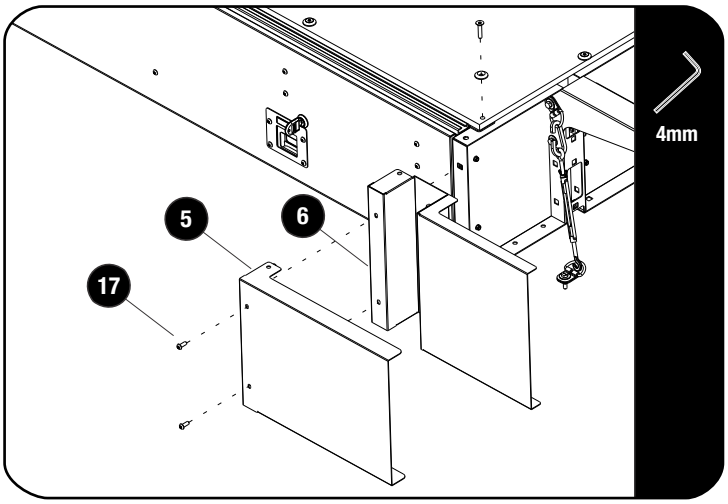

Secure the Front Face Plates (Items 5 or 6) to the drawer using M6 x 16 Button Head Bolts (Item 17) as shown.

2.8

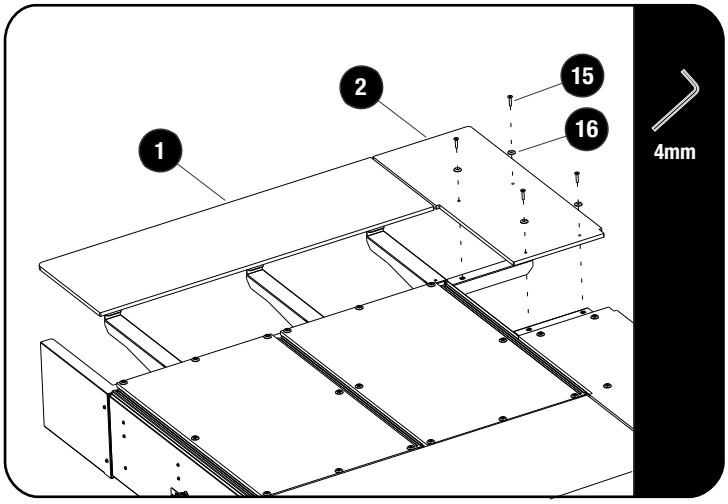

Secure the Rear Deck LH & RH (Items 2 & 3) to the Rear Wing and Rear Support using M6 x 30 Countersink Screws and M6 Finishing Washers (Items 15 & 16) as shown.

© 2019 FRONT RUNNER VEHICLE OUTFITTERS

3 FITTING ELECTRICAL SOCKETS

3.1

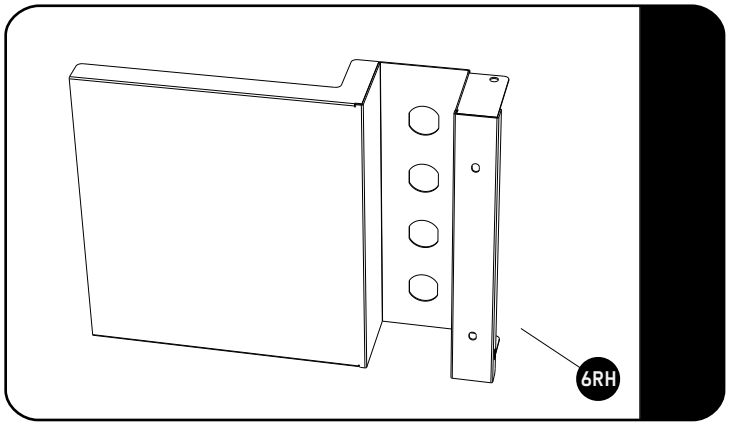

Socket Inserts (sold separately) can be installed into this front face.

ECOM117 - Amp Meter
ECOM118 - USB Socket
ECOM119 - 12/24V Socket
ECOM120 - Merit Socket
ECOM121 - Engel Socket
ECOM124 - Volt Meter

4 FINISH

Congratulations! You did it. Take a step back and admire your work!

5 INSTALL OTHER VEHICLE AND RACK ACCESSORIES

Now's the time to visit your favorite Front Runner Dealer in person or online.

Be sure to tag us. We love to see our gear in action! #FrontRunnerOutfitters #BornToRoam

Share your adventures on:

© 2019 FRONT RUNNER VEHICLE OUTFITTERS