FRONT RUNNER
VEHICLE OUTFITTERS

DRAWER DECK COMPLETION SET

PORSCHE CAYENNE (2002-2010)

ENG

SSDS116

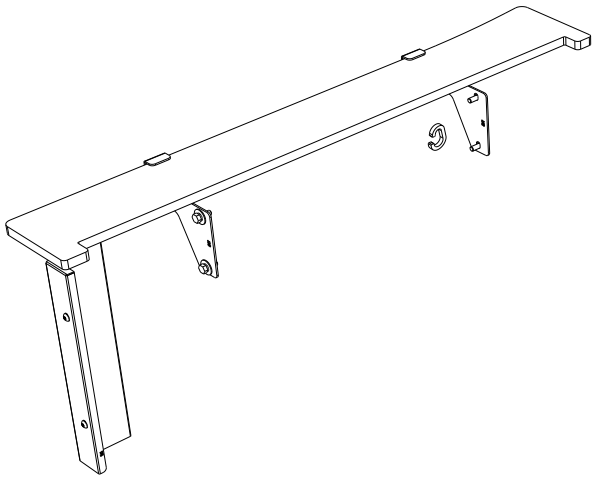

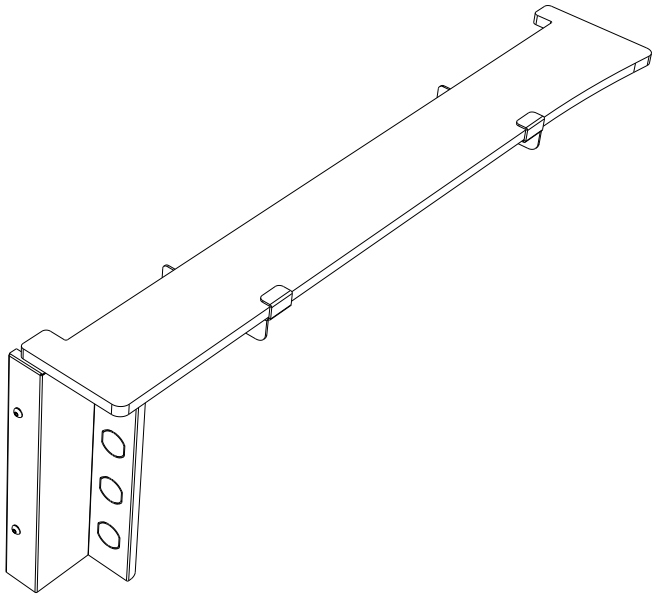

READ ME !

Thank you for purchasing a Front Runner Deck Completion Set.

Before you start, take a moment to familiarize yourself with the Fitting Instructions and the components received.

Refer to Page 2 for a list of all the components, quantities and tools required.

NOTE: Front Runner will not be responsible for any damage caused by the failure to install the product according to these instructions. Please cal us if you have any questions about the installation of this product.

IMPORTANT WARNING!

FRONT RUNNER CAN NOT RECOMMEND A MAXIMUM LOAD CARRYING CAPACITY. PLEASE REFER TO YOUR VEHICLE MANUFACTURER'S RECOMMENDATIONS. IT IS CRITICAL THAT ALL FRONT RUNNER PRODUCTS BE PROPERLY AND SECURELY ASSEMBLED AND ATTACHED TO YOUR VEHICLE. IMPROPER ATTACHMENT COULD RESULT IN AN AUTOMOBILE ACCIDENT, AND COULD CAUSE SERIOUS BODILY INJURY OR DEATH. YOU ARE RESPONSIBLE FOR ASSEMBLING AND SECURING ALL FRONT RUNNER PRODUCTS TO YOUR VEHICLE. CHECKING THE ATTACHMENTS PRIOR TO USE, AND PERIODICALLY INSPECTING THE PRODUCTS FOR ADJUSTMENT, WEAR AND DAMAGE. THEREFORE YOU MUST READ AND UNDERSTAND ALL OF THE INSTRUCTIONS AND PRECAUTIONS SUPPLIED WITH YOUR FRONT RUNNER PRODUCT PRIOR TO INSTALLATION OR USE. IF YOU DO NOT UNDERSTAND ALL OF THE INSTRUCTIONS AND CAUTIONS, OR IF YOU HAVE NO MECHANICAL EXPERIENCE AND ARE NOT THOROUGHLY FAMILIAR WITH THE INSTALLATION PROCEDURES, YOU SHOULD HAVE THE PRODUCT INSTALLED BY A PROFESSIONAL INSTALLER OR OTHER QUALIFIED PERSONNEL.

© COPYRIGHT 2018 FRONT RUNNER VEHICLE OUTFITTERS

1 GET ORGANIZED

IN THE BOX

1	2 X	Side Deck 1LH + 1RH
2	2 X	Front Face 1LH + 1RH
3	4 X	M5 x 10 Button Head Bolt
4	4 X	M5 x 10 x 1 SS Flat Washer
5	4 X	M5 Nyloc Nut
6	8 X	M6 x 16 Button Head Bolt
7	8 X	M6 SS Spring Washer
8	8 X	M6 x 19 x 1SS Flat Washer
9	4 X	Side Wing 2LH + 2RH
10	2 X	Laser Cut Carabiner 37mm

TOOLS NEEDED

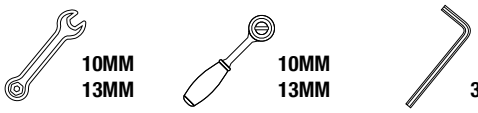

FIGURE 1.1

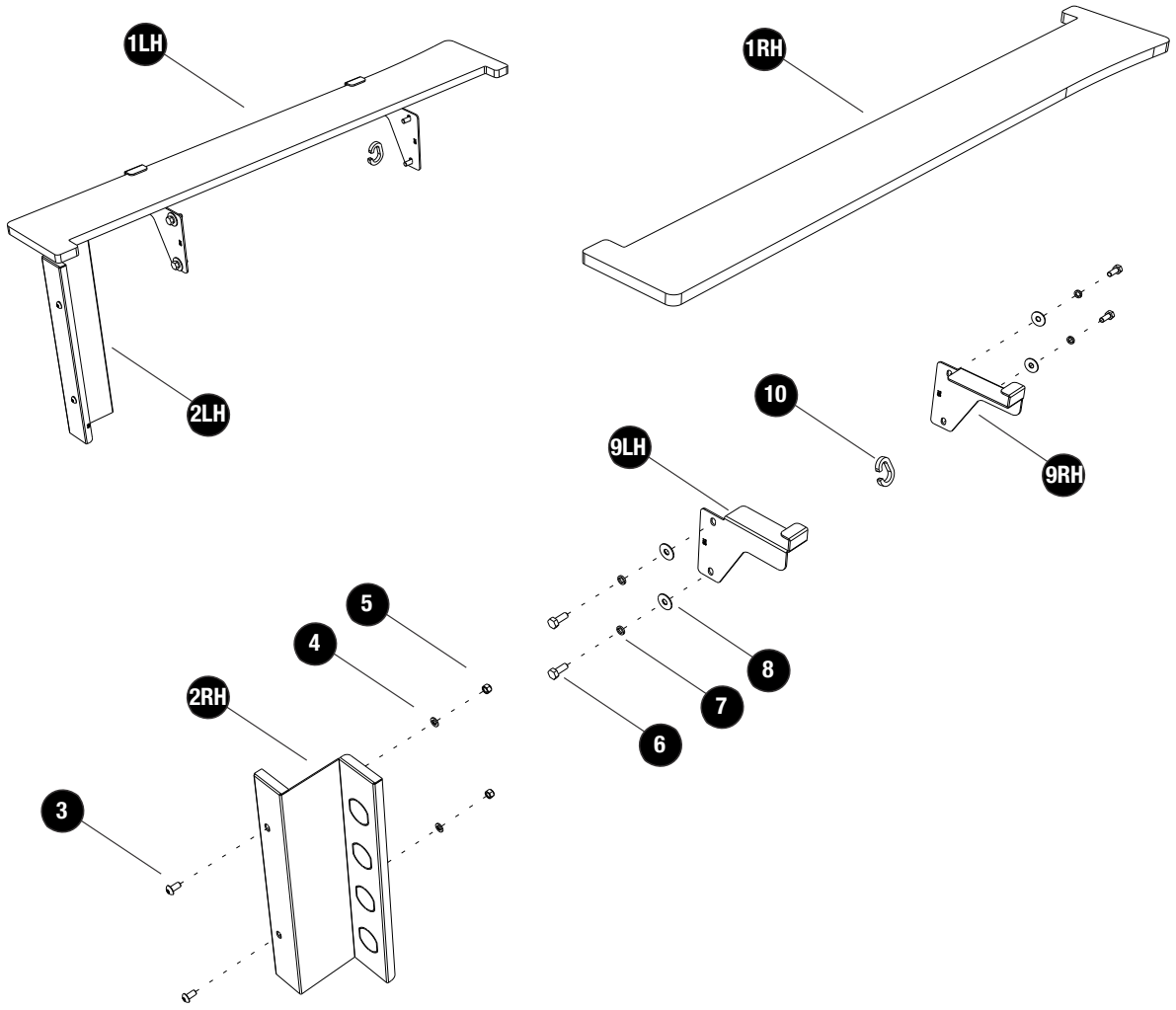

 © COPYRIGHT 2018 FRONT RUNNER VEHICLE OUTFITTERS

2 FIT AND SECURE

2.1

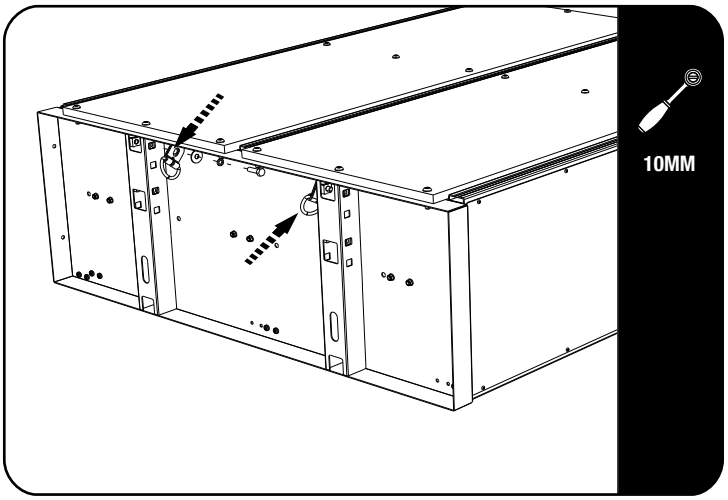

Before placing the Drawer into the vehicle secure the D-Rings on the inside of the pillars as shown.

D-Rings and fasteners are supplied with the Drawer (SSDR003).

2.2

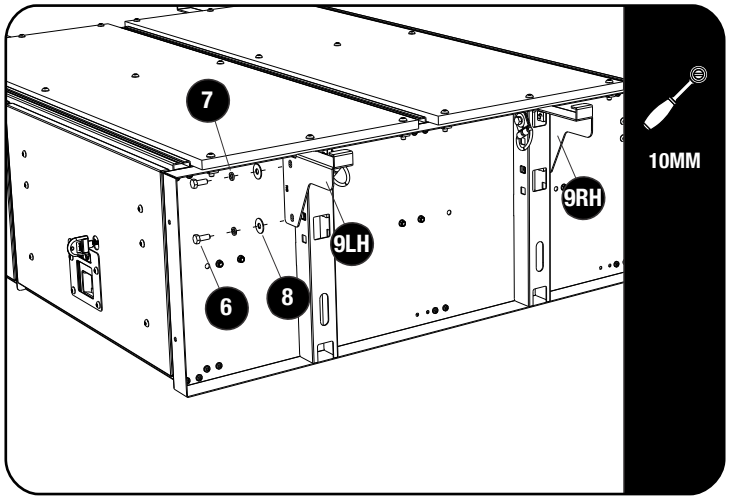

Place the Drawer into the vehicle before you secure the Side Wings (Item 9LH & 9RH)

Use M6 x 16 Hex Bolt, M6 ss Spring Washers and M6 x 19 x 1SS Flat Washers (Items 6, 7 & 8) to secure the Side Wings as shown.

2.3

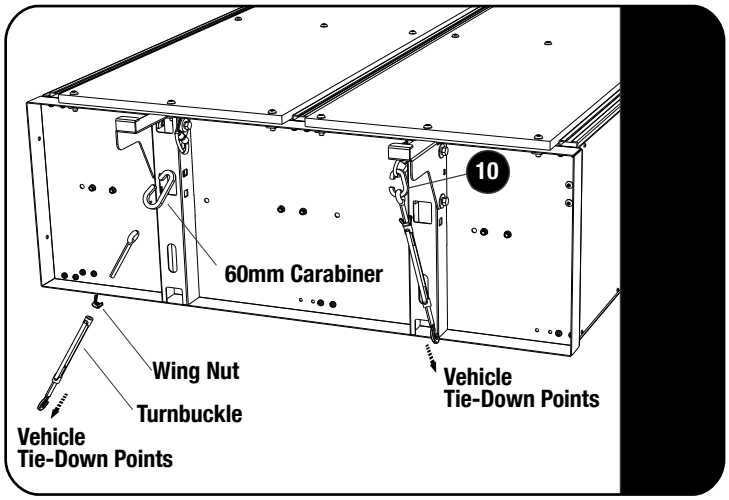

Place the Side Decks (Items 1LH & 1RH) on Drawer to position the drawer in the vehicle. Make sure that the Side Decks follow the contours of the panel inside the vehicle, this will center the Drawer left to right and back to front.

After the drawer is in position, remove the Side Decks.

In the front, secure the Drawer to the vehicles tie-down points using two Turnbuckles and two 60mm Carabiner Hooks (supplied with SSDR003) as shown.

At the rear of the Drawer secure using two Turnbuckles (supplied with SSDR003) and two 37mm Carabiner Hooks (Item 10) as shown.

© COPYRIGHT 2018 FRONT RUNNER VEHICLE OUTFITTERS

2 FIT AND SECURE

2.4

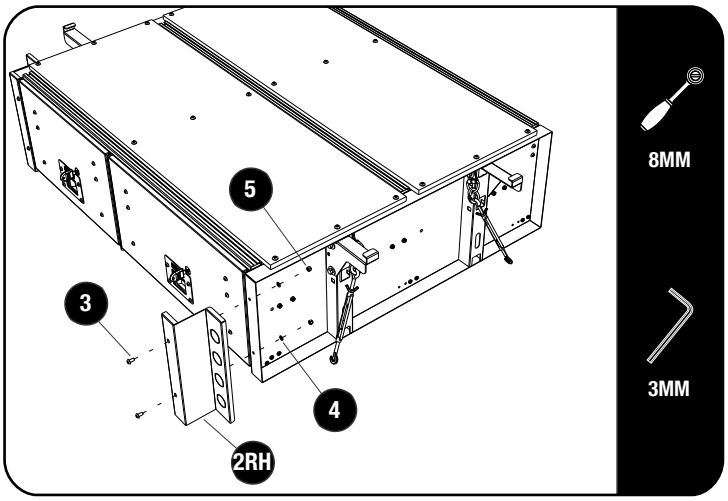

Secure the Front Faces (Item 2LH & 2RH) to the Drawer using M5 x 10 Button Heads, M5 Flat Washers and M5 Nyloc Nuts (Items 3, 4 & 5) as shown.

2.5

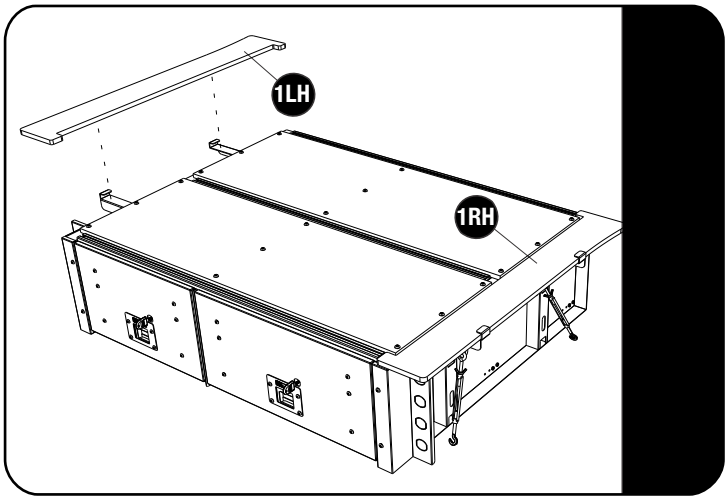

Fit the LH and RH Side Decks (Items 1LH & 1RH) to the Drawer by placing them into the C-Clips and pushing downward.

© COPYRIGHT 2018 FRONT RUNNER VEHICLE OUTFITTERS

3 FITTING ELECTRICAL SOCKETS

3.1

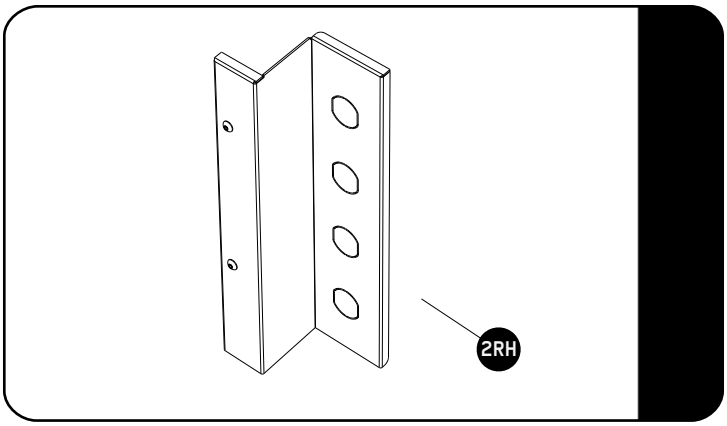

Twist the pre cut knock outs to remove.

Socket Inserts (sold separately) can be installed into this front face.

ECOM117 - Amp Meter
ECOM118 - USB Socket
ECOM119 - 12/24V Socket
ECOM120 - Merit Socket
ECOM121 - Engel Socket
ECOM124 - Volt Meter

4 COMPLETION

4.1

Congratulations! You did it. Take a step back and admire your work!

5 INSTALL OTHER VEHICLE AND RACK ACCESSORIES

Now's the time to visit your favorite Front Runner Dealer in person or Online.

Be sure to tag us. We love to see our gear in action! #FrontRunnerOutfitters #BornToRoam

Share your adventures on:

© COPYRIGHT 2018 FRONT RUNNER VEHICLE OUTFITTERS