FRONT RUNNER
VEHICLE OUTFITTERS

DRAWER DECK COMPLETION SET
TOYOTA LAND CRUISER 70

ENG

SSDS115

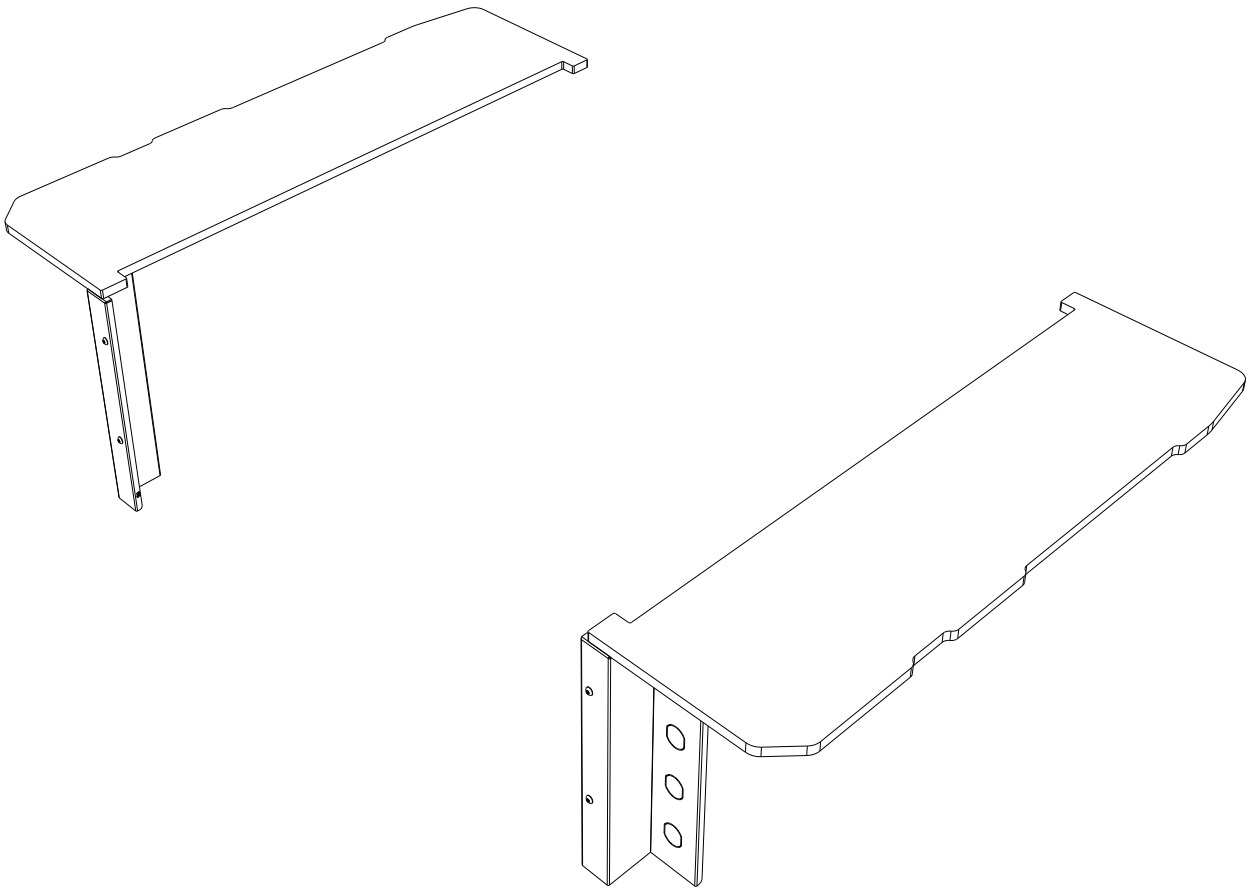

READ ME !

Thank you for purchasing a Front Runner Deck Completion Set.

Before you start, take a moment to familiarize yourself with the Fitting Instructions and the components received.

Refer to Page 2 for a list of all the components, quantities and tools required.

NOTE: Front Runner will not be responsible for any damage caused by the failure to install the product according to these instructions. Please cal us if you have any questions about the installation of this product.

IMPORTANT WARNING!

FRONT RUNNER CAN NOT RECOMMEND A MAXIMUM LOAD CARRYING CAPACITY. PLEASE REFER TO YOUR VEHICLE MANUFACTURER'S RECOMMENDATIONS. IT IS CRITICAL THAT ALL FRONT RUNNER PRODUCTS BE PROPERLY AND SECURELY ASSEMBLED AND ATTACHED TO YOUR VEHICLE. IMPROPER ATTACHMENT COULD RESULT IN AN AUTOMOBILE ACCIDENT, AND COULD CAUSE SERIOUS BODILY INJURY OR DEATH. YOU ARE RESPONSIBLE FOR ASSEMBLING AND SECURING ALL FRONT RUNNER PRODUCTS TO YOUR VEHICLE. CHECKING THE ATTACHMENTS PRIOR TO USE, AND PERIODICALLY INSPECTING THE PRODUCTS FOR ADJUSTMENT, WEAR AND DAMAGE. THEREFORE YOU MUST READ AND UNDERSTAND ALL OF THE INSTRUCTIONS AND PRECAUTIONS SUPPLIED WITH YOUR FRONT RUNNER PRODUCT PRIOR TO INSTALLATION OR USE. IF YOU DO NOT UNDERSTAND ALL OF THE INSTRUCTIONS AND CAUTIONS, OR IF YOU HAVE NO MECHANICAL EXPERIENCE AND ARE NOT THOROUGHLY FAMILIAR WITH THE INSTALLATION PROCEDURES, YOU SHOULD HAVE THE PRODUCT INSTALLED BY A PROFESSIONAL INSTALLER OR OTHER QUALIFIED PERSONNEL.

© COPYRIGHT 2017 FRONT RUNNER VEHICLE OUTFITTERS

1 GET ORGANIZED

IN THE BOX

1	2 X	Side Deck 1LH + 1RH
2	2 X	Front Face 1LH + 1RH
3	4 X	M5 x 10 Button Head
4	4 X	M5 x 10 x 1SS Flat Washer
5	4 X	M5 Nyloc Nut
6	6 X	115mm Carabiner

TOOLS NEEDED

FIGURE 1.1

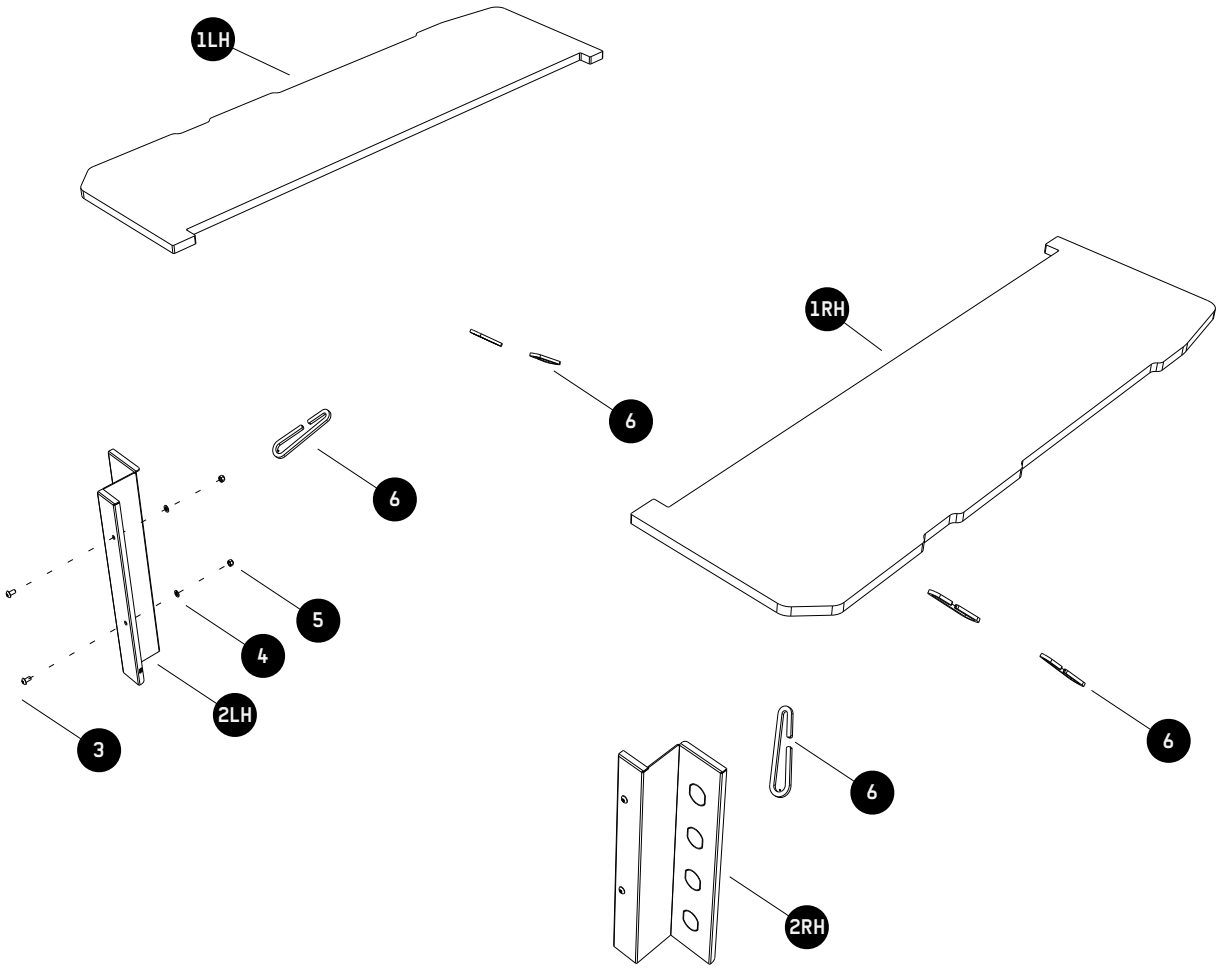

 © COPYRIGHT 2017 FRONT RUNNER VEHICLE OUTFITTERS

2 FIT AND SECURE

2.1

Inside the rear door, loosen and rotate the left and right tie-down ring as shown.

2.2

Place the Drawer System into the vehicle, aligning the front of the Drawer to the edge of the plactic trim as shown. Ensure that the Drawer System is centered left to right.

2.3

At the sides of the Drawer System, loosen and remove the D-ring closest to the front of the Drawer.

The D-ring will be refitted in Step 2.4.

© COPYRIGHT 2017 FRONT RUNNER VEHICLE OUTFITTERS

2 FIT AND SECURE

2.4

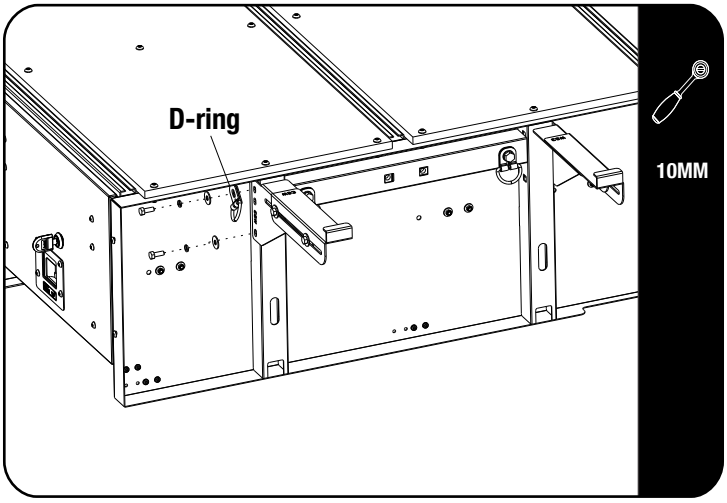

Fit the Adjustable Wing Set (SSWS003) to the Drawer.

Please see SSWS003 Fitment Guide for assembly details.

Secure the D-ring that you have removed in Step 2.3 in the top hole of the Wings closest to the front of the Drawer Sytem as shown.

2.5

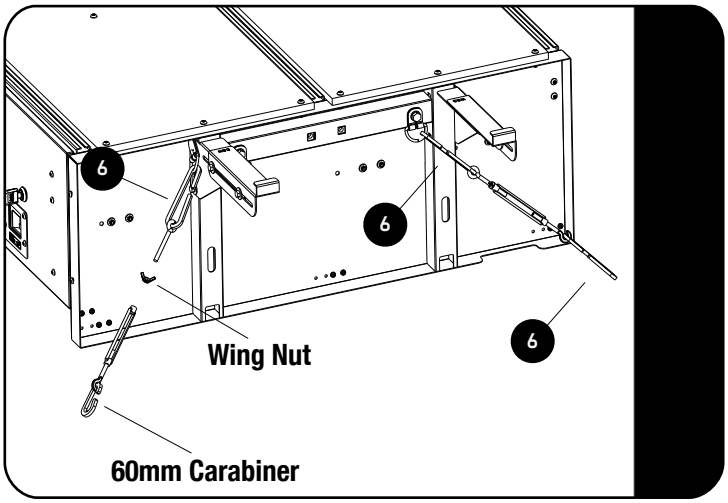

Secure the Drawer System in position using two Turn Buckles (supplied with SSDR005) and two 115mm Carabiners (Item 6) at the rear of the Drawer.

At the front of the Drawer use one Turn Buckle, 60mm Carabiner (supplied with SSDR005) and one 115mm Carabiner (Item 6) as shown.

Tighten the wing nut on each Turn Buckle to prevent it from coming loose.

2.6

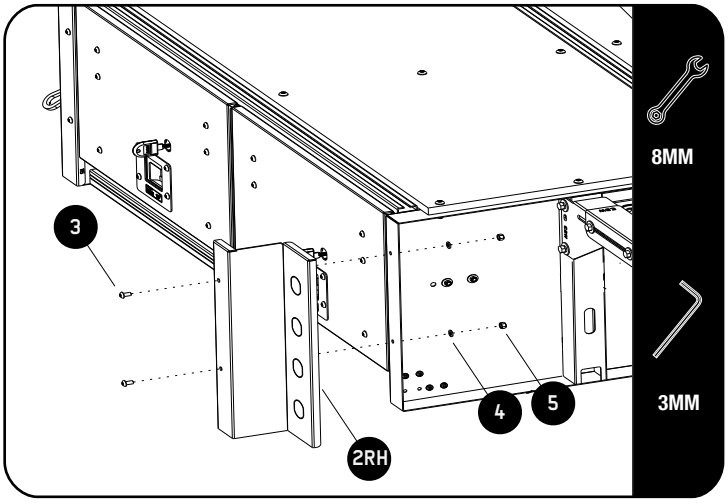

Secure the Front Faces (Item 2LH & 2RH) to the Drawer using M5 x 10 Button Heads, M5 x 10 x 1SS Flat Washers and M5 Nyloc Nuts (Items 3, 4 & 5) as shown.

© COPYRIGHT 2017 FRONT RUNNER VEHICLE OUTFITTERS

2 FIT AND SECURE

2.7

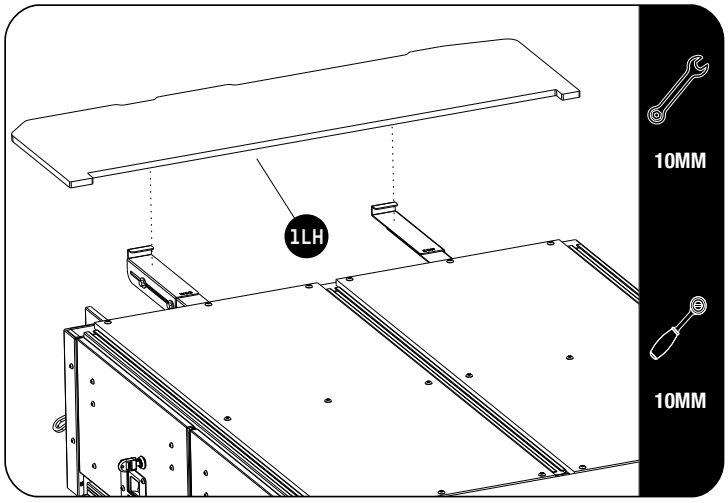

Place the Side Decks (Item 1LH & 1RH) onto the Drawer making sure that you slide it into the C-clip of the Front and Rear Side Wings.

Push the Adjustable Wing up against the Side Deck.

Carefully remove the Side Deck so that the adjustable Wings do not move. Fully tighten the Adjustable Wings and refit the Side Decks.

3 FIT ECOM SOCKETS

3.1

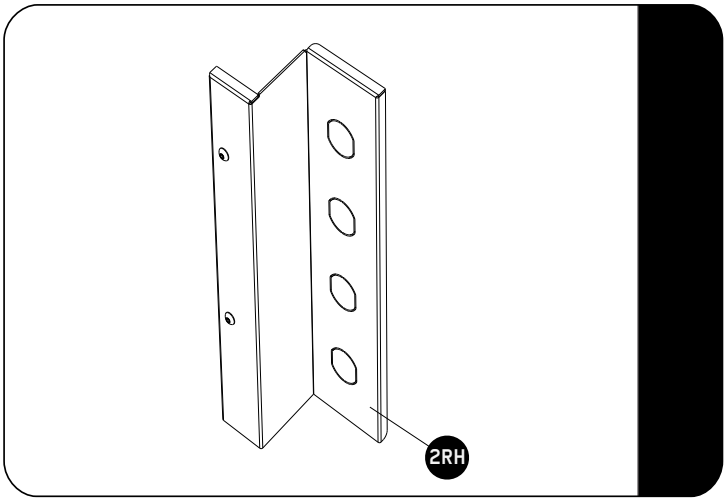

Twist the pre cut knock outs to remove.

Socket Inserts (Sold Separately) can be put into this front face.

ECOM117 - Amp Meter
ECOM118 - USB Socket
ECOM119 - 12/24V Socket
ECOM120 - Merit Socket
ECOM121 - Engel Socket
ECOM124 - Volt Meter

© COPYRIGHT 2017 FRONT RUNNER VEHICLE OUTFITTERS

4 COMPLETION

4.1

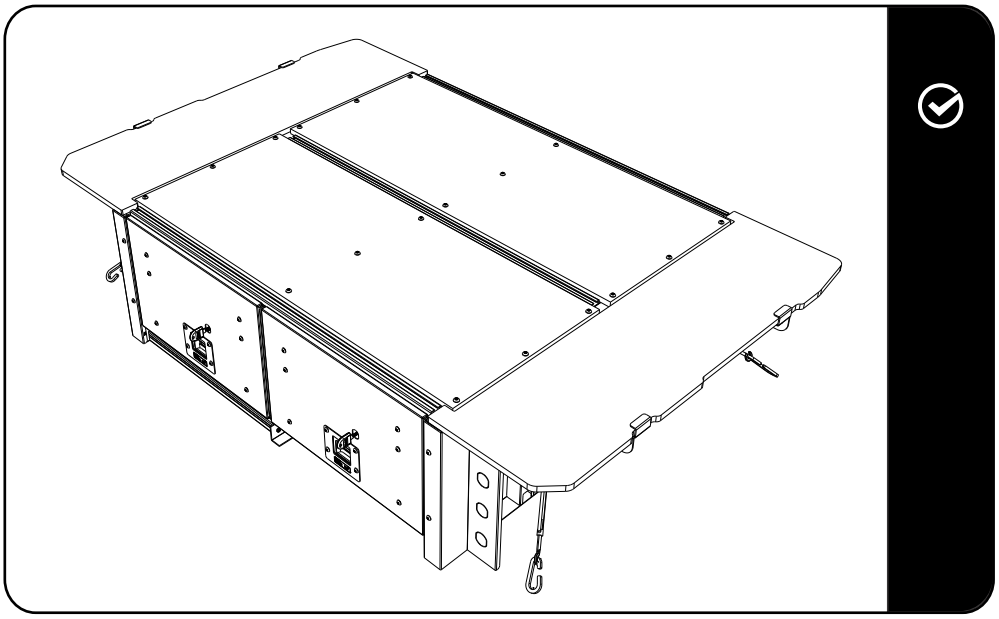

Congratulations! You did it. Take a step back and admire your work!

5 INSTALL OTHER VEHICLE AND RACK ACCESSORIES

Now's the time to visit your favorite Front Runner Dealer in person or Online.

Be sure to tag us. We love to see our gear in action! #FrontRunnerOutfitters #BornToRoam

Share your adventures on:

© COPYRIGHT 2017 FRONT RUNNER VEHICLE OUTFITTERS