FRONT RUNNER
VEHICLE OUTFITTERS

DRAWER DECK COMPLETION SET

TOYOTA 4RUNNER (5TH GEN_N280)

ENG

SSDS114

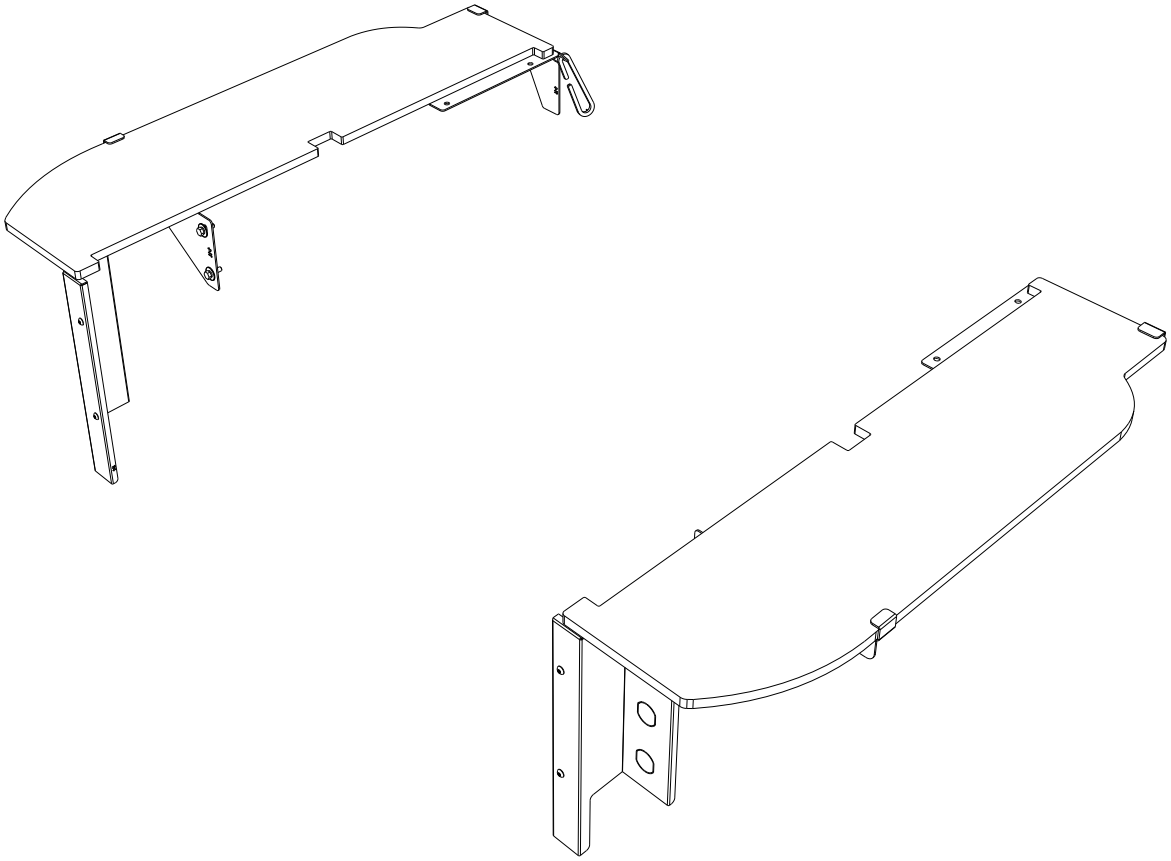

READ ME ! ⚠

Thank you for purchasing a Front Runner Deck Completion Set.

Before you start, take a moment to familiarize yourself with the Fitting Instructions and the components received.

Refer to Page 2 for a list of all the components, quantities and tools required.

NOTE: Front Runner will not be responsible for any damage caused by the failure to install the product according to these instructions. Please cal us if you have any questions about the installation of this product.

IMPORTANT WARNING! ⚠

FRONT RUNNER CAN NOT RECOMMEND A MAXIMUM LOAD CARRYING CAPACITY. PLEASE REFER TO YOUR VEHICLE MANUFACTURER'S RECOMMENDATIONS. IT IS CRITICAL THAT ALL FRONT RUNNER PRODUCTS BE PROPERLY AND SECURELY ASSEMBLED AND ATTACHED TO YOUR VEHICLE. IMPROPER ATTACHMENT COULD RESULT IN AN AUTOMOBILE ACCIDENT, AND COULD CAUSE SERIOUS BODILY INJURY OR DEATH. YOU ARE RESPONSIBLE FOR ASSEMBLING AND SECURING ALL FRONT RUNNER PRODUCTS TO YOUR VEHICLE. CHECKING THE ATTACHMENTS PRIOR TO USE, AND PERIODICALLY INSPECTING THE PRODUCTS FOR ADJUSTMENT, WEAR AND DAMAGE. THEREFORE YOU MUST READ AND UNDERSTAND ALL OF THE INSTRUCTIONS AND PRECAUTIONS SUPPLIED WITH YOUR FRONT RUNNER PRODUCT PRIOR TO INSTALLATION OR USE. IF YOU DO NOT UNDERSTAND ALL OF THE INSTRUCTIONS AND CAUTIONS, OR IF YOU HAVE NO MECHANICAL EXPERIENCE AND ARE NOT THOROUGHLY FAMILIAR WITH THE INSTALLATION PROCEDURES, YOU SHOULD HAVE THE PRODUCT INSTALLED BY A PROFESSIONAL INSTALLER OR OTHER QUALIFIED PERSONNEL.

© COPYRIGHT 2018 FRONT RUNNER VEHICLE OUTFITTERS

1 GET ORGANIZED

IN THE BOX

1	1 X	Side Deck 1LH + 1RH
2	1 X	Front Face 1LH + 1RH
3	2 X	Rear Wing 1LH + 1RH
4	2 X	Rear Wing Outer 1LH + 1RH
5	2 X	Front Wings 1LH + 1RH
6	2 X	15mm Laser Cut Carabiner
7	4 X	M5 x 10 Button Head
8	4 X	M5 x 10 x 1SS Flat Washer
9	4 X	M5 Nyloc Nut
10	4 X	M6 x 12 x 1SS Flat Washer
11	4 X	M6 Nyloc Nut
12	4 X	M6 x 12 Button Head
13	4 X	M6 x 19 x 1SS Flat Washer
15	4 X	M6 Spring Washer
14	4 X	M6 x 20 Hex Bolt

TOOLS NEEDED

10MM
13MM

10MM
13MM

3mm
4mm

FIGURE 1.1

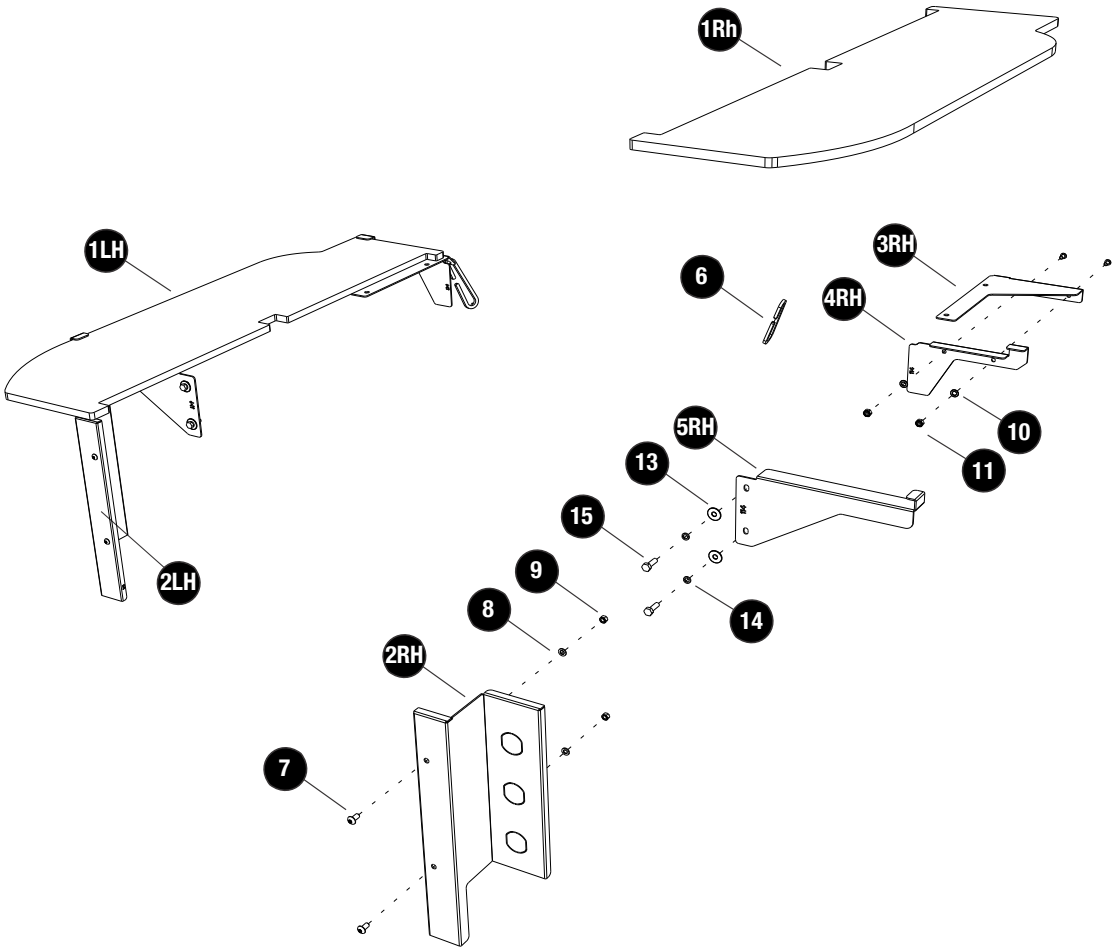

 © COPYRIGHT 2018 FRONT RUNNER VEHICLE OUTFITTERS

2 FIT AND SECURE

2.1

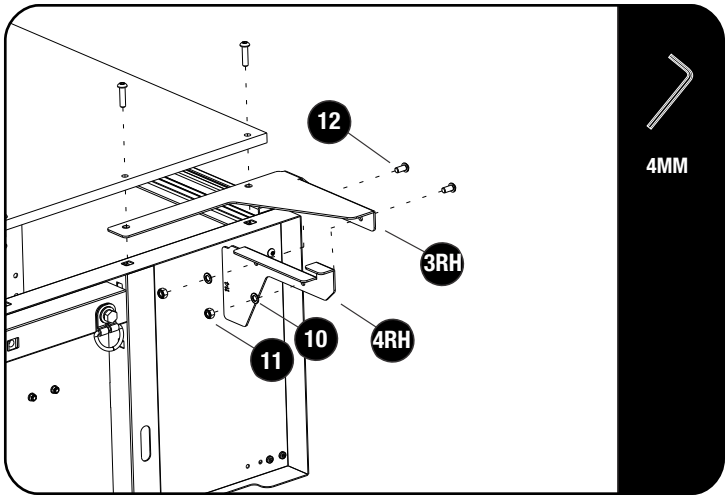

Loosen the rear deck of the drawer. Place the Rear Wing (Item 3) between the deck and the drawer.

Fit the Rear Wing Outer (Item 4) using M6 x 12 Button Head Bolt, M6 x 12 x 1SS Flat Washer and M6 Nyloc Nuts (Items 10, 11 & 12) as shown.

Do this on both sides of the drawer.

Remember to insert stud plates for eye nuts before refitting the deck.

2.2

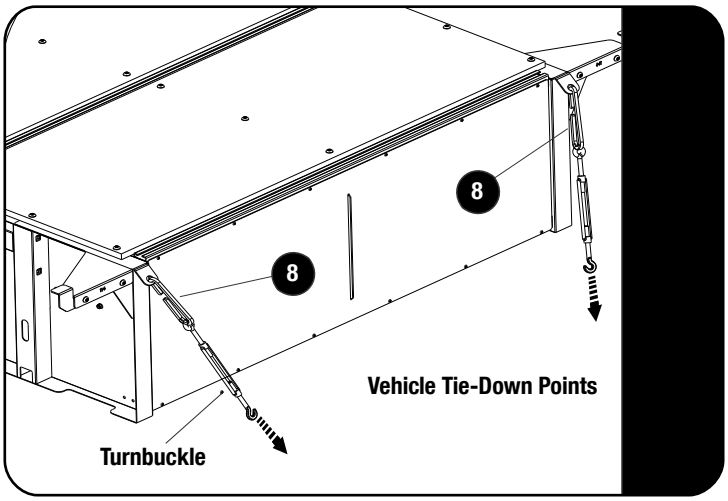

Use the LH and RH Side Decks as guides to ensure the drawer is positioned correctly.

Secure the rear of the drawer to the vehicle tie-down points by using the 115mm Carabiner Hooks (Item 8) supplied with SSDS114 and the Turnbuckles supplied with SSDR005.

2.3

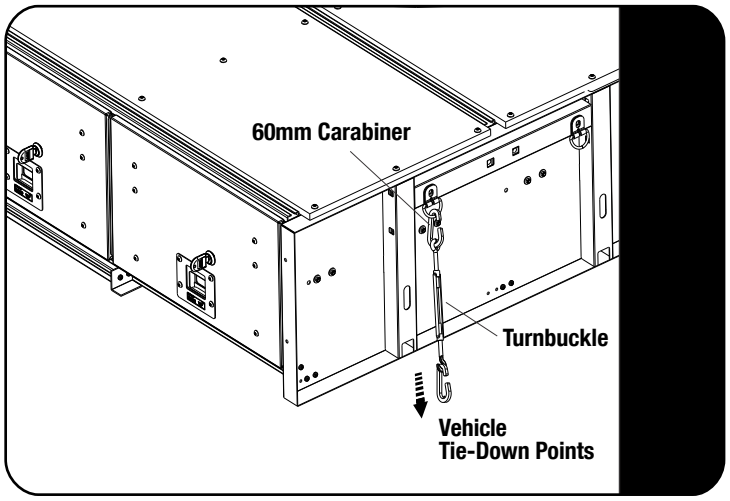

To secure the front of the drawer use 60mm Carabiners and Turnbuckles supplied with SSDR005.

© COPYRIGHT 2018 FRONT RUNNER VEHICLE OUTFITTERS

2 FIT AND SECURE

2.4

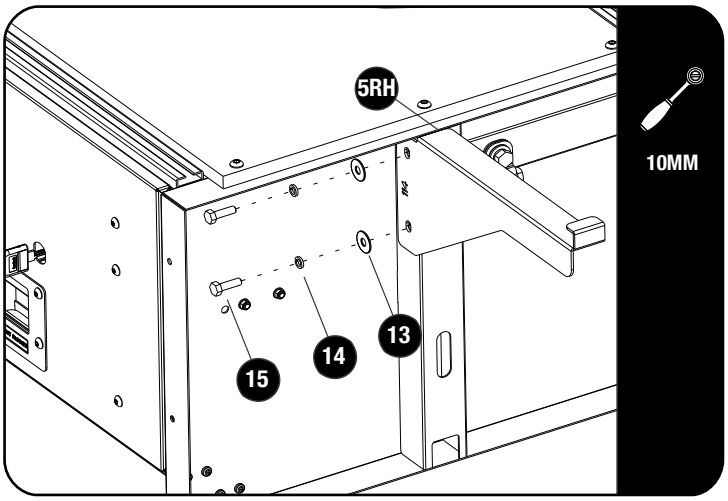

Secure the Front Wings (Item 5) using M6 x 20 Hex Bolt, M6 Spring Washers and M6 x 19 x 1SS Flat Washers (Items 13, 14 & 15) as shown.

Do this on both sides of the drawer.

2.5

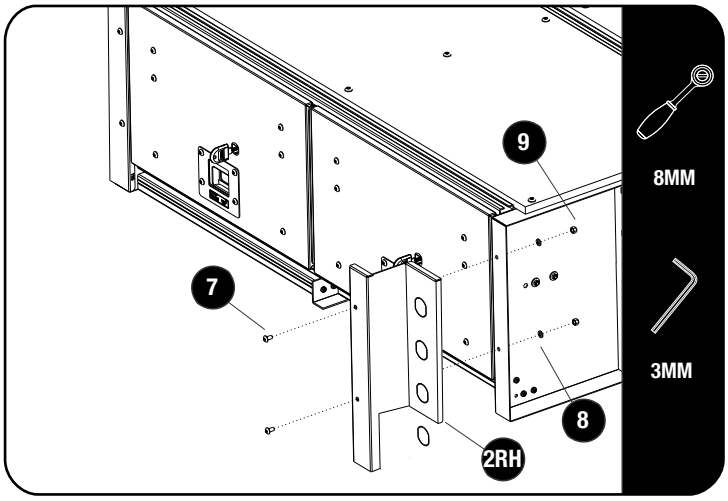

Secure the Front Faces (Item 2) to the drawer using M5 x 10 Button Heads, M5 Flat Washers and M5 Nyloc Nuts (Items 7, 8 & 9) as shown.

2.6

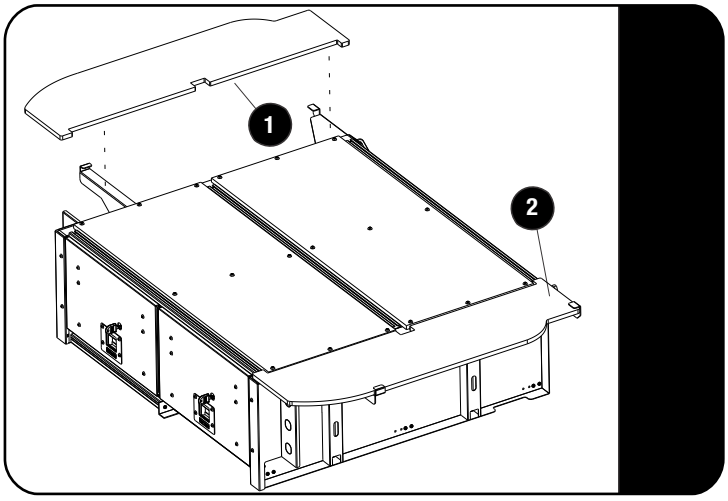

Fit the LH and RH Side Decks (Items 1 & 2) to the drawer by placing them into the C-Clips and pushing down on the drawer side.

© COPYRIGHT 2018 FRONT RUNNER VEHICLE OUTFITTERS

3 FITTING ELECTRICAL SOCKETS

3.1

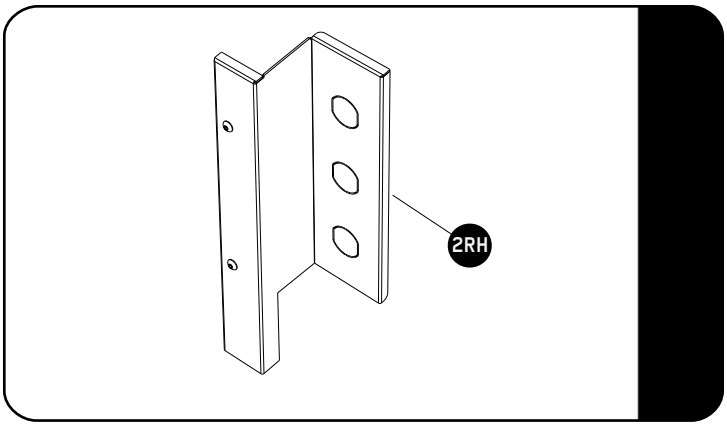

Twist the pre cut knock outs to remove.

Socket Inserts (Sold Separately) can be put into this front face.

ECOM117 - Amp Meter
ECOM118 - USB Socket
ECOM119 - 12/24V Socket
ECOM120 - Merit Socket
ECOM121 - Engel Socket
ECOM124 - Volt Meter

4 COMPLETION

4.1

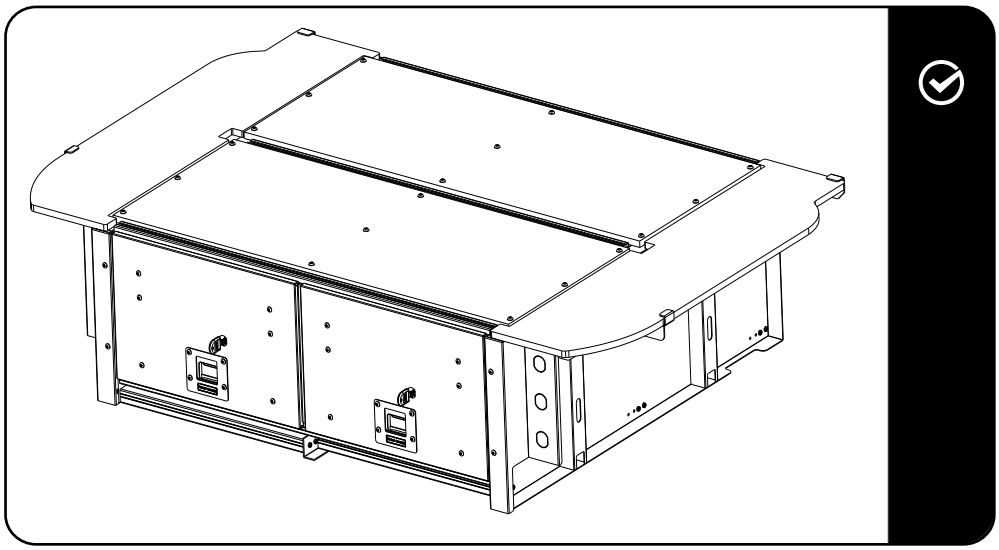

Congratulations! You did it. Take a step back and admire your work!

5 INSTALL OTHER VEHICLE AND RACK ACCESSORIES

Now's the time to visit your favorite Front Runner Dealer in person or Online.

Be sure to tag us. We love to see our gear in action! #FrontRunnerOutfitters #BornToRoam

Share your adventures on:

© COPYRIGHT 2018 FRONT RUNNER VEHICLE OUTFITTERS