FRONT RUNNER
VEHICLE OUTFITTERS

DRAWER DECK COMPLETION SET

KIA SORENTO 2016-CURRENT

ENG

SSDS111

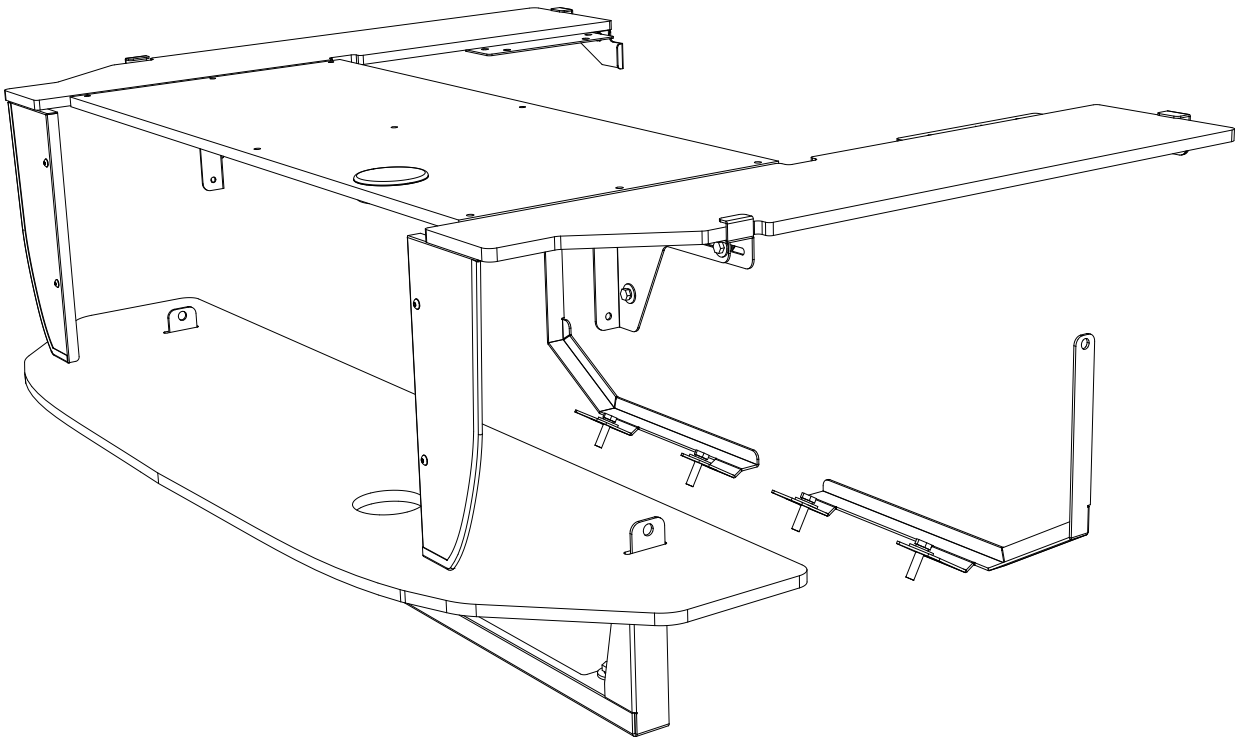

READ ME !

Thank you for purchasing a Front Runner Deck Completion Set.

Before you start, take a moment to familiarize yourself with this Fitting Instruction and the components received.

Refer to Page 2 for a list of all the components, quantities and tools required.

IMPORTANT WARNING!

IT IS CRITICAL THAT ALL FRONT RUNNER PRODUCTS BE PROPERLY AND SECURELY ASSEMBLED AND ATTACHED TO YOUR VEHICLE. IMPROPER ATTACHMENT COULD RESULT IN AN AUTOMOBILE ACCIDENT, AND COULD CAUSE SERIOUS BODILY INJURY OR DEATH. YOU ARE RESPONSIBLE FOR ASSEMBLING AND SECURING ALL FRONT RUNNER PRODUCTS TO YOUR VEHICLE, CHECKING THE ATTACHMENTS PRIOR TO USE, AND PERIODICALLY INSPECTING THE PRODUCTS FOR ADJUSTMENT, WEAR AND DAMAGE. THEREFORE, YOU MUST READ AND UNDERSTAND ALL OF THE INSTRUCTIONS AND PRECAUTIONS SUPPLIED WITH YOUR FRONT RUNNER PRODUCT PRIOR TO INSTALLATION OR USE. IF YOU DO NOT UNDERSTAND ALL OF THE INSTRUCTIONS AND CAUTIONS, OR IF YOU HAVE NO MECHANICAL EXPERIENCE AND ARE NOT THOROUGHLY FAMILIAR WITH THE INSTALLATION PROCEDURES, YOU SHOULD HAVE THE PRODUCT INSTALLED BY A PROFESSIONAL INSTALLER OR OTHER QUALIFIED PERSONNEL.

NOTE: Front Runner will not be responsible for any damage caused by the failure to install the product according to these instructions.

Please call us if you have any questions about the installation of this product.

© 2019 FRONT RUNNER VEHICLE OUTFITTERS

1 GET ORGANIZED

Here is what you are looking at for SSDS111

IN THE BOX

1	1 X	Side Deck LH
2	1 X	Replacement Top Deck
3	1 X	Side Deck RH
4	2 X	Drawer Rear Bracket 2
5	2 X	Drawer Rear Bracket 1
6	2 X	Drawer Front Ajustable Bracket
7	2 X	Drawer Front Fixed Bracket
8	2 X	Drawer Front Mount 1LH And 1RH
9	2 X	Front Faces 1LH and 1Rh
10	1 X	Replacement Bottom Deck
11	2 X	Drawer Rear Mount 1LH And 1RH
12	20 X	M10x30x3 Flat Washer
13	8 X	M10 Spring Washer
14	8 X	M10x40 Hex Bolt Fine Thread
15	4 X	M5x10 Button Head
16	4 X	M5 Flat Washer
17	4 X	M5 Nyloc
18	2 X	Pinchweld 310mm
19	8 X	M6x16 Hex Bolt

IN THE BOX

20	12 X	M6x19x1ss Flat Washer
21	4 X	M6 Spring Washer
22	8 X	M6 Nyloc
23	4 X	M6 Flat Washer
24	4 X	M6x12 Button Head
25	1 X	Plastic End Cap
26	1 X	Wheel Winder T-Handel
27	1 X	Wheel Winder Adapter
28	2 X	Carabiner Hook 37mm
29	2 X	Front Face 1LH + 1RH With Knockouts

TOOLS NEEDED

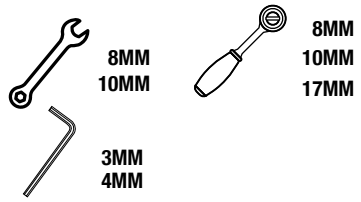

FIGURE 1.1

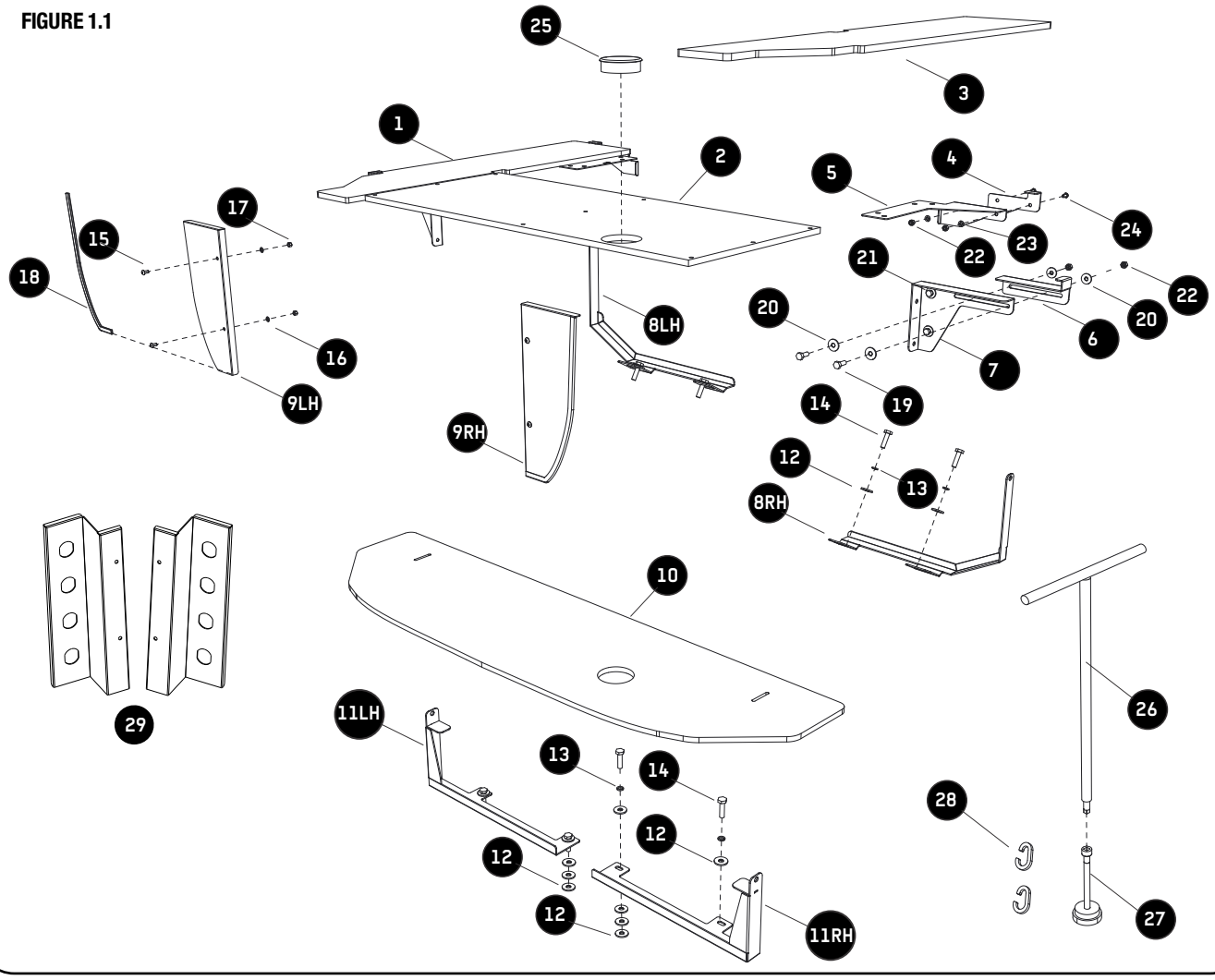

 © 2019 FRONT RUNNER VEHICLE OUTFITTERS

2 FIT AND SECURE

2.1

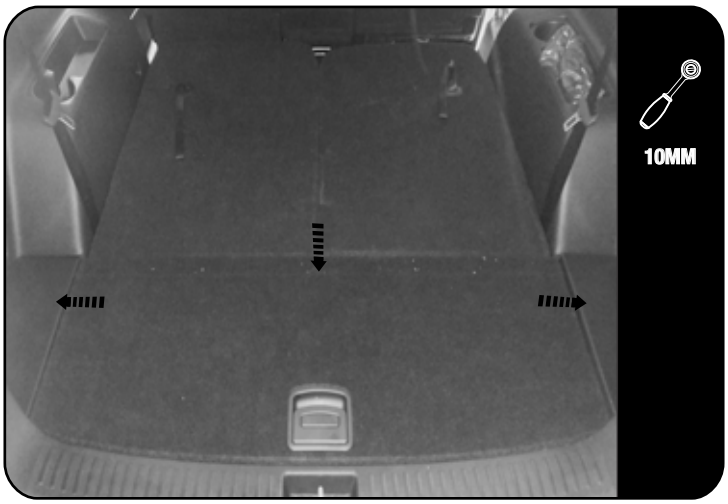

Remove the tool tray and side covers. Remove tools from tool tray. After the drawer has been installed the tools can be stored next to it.

2.2

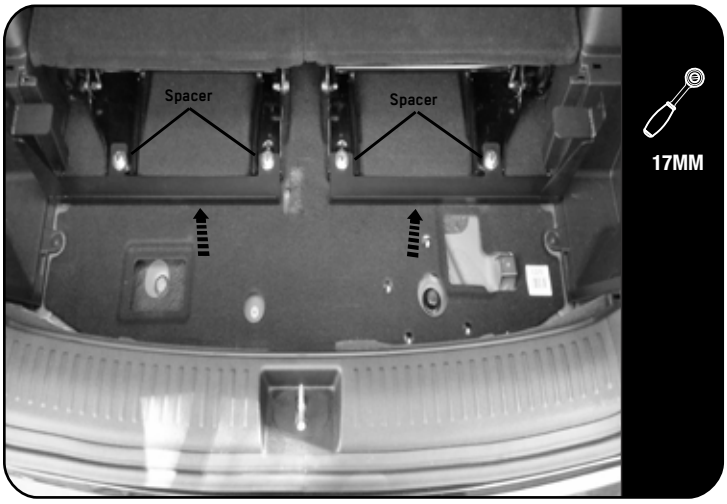

Loosen the rear seat rear bolts and secure item 11LH and 11RH with the fasteners shown in 1.1. Place 3 washers at the 4 mounting points between item 11 and the seats base frame.

2.3

Loosen the rear seat front bolts and secure item 8LH and 8RH with the fasteners shown in 1.1.

© 2019 FRONT RUNNER VEHICLE OUTFITTERS

2 FIT AND SECURE

2.4

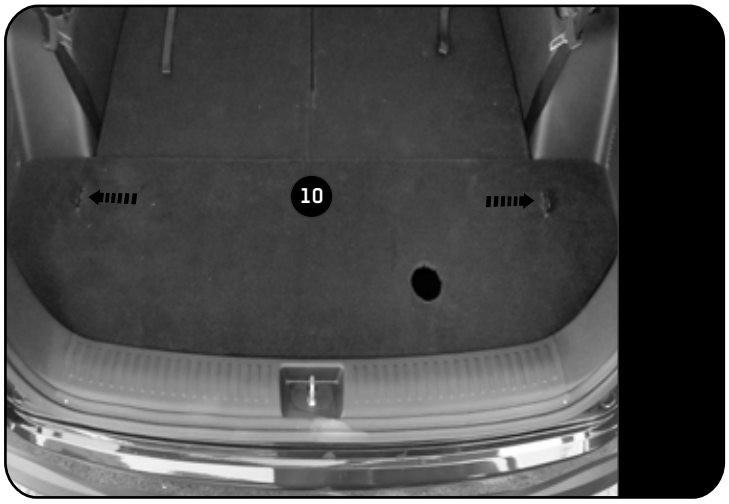

Place item 10 in the vehicle. Make sure that the two tie-down points shown in 2.4 protrude through the floor.

2.5

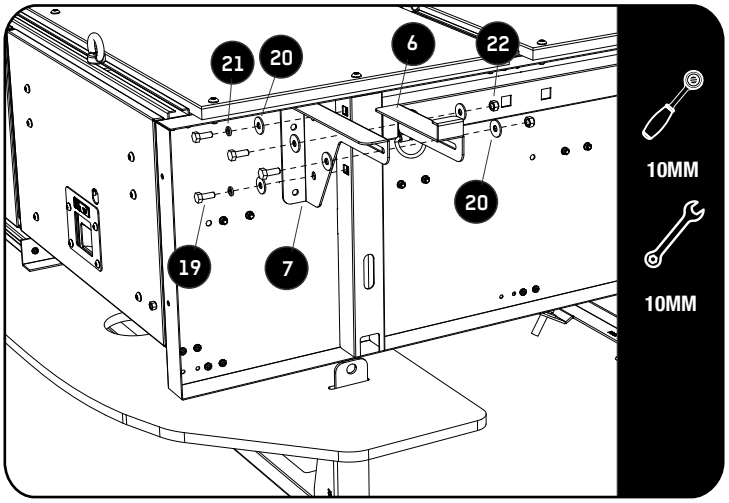

Place the drawer in the vehicle before assembling the wings onto the drawer. Refer to 1.1 for wing placement.

2.6

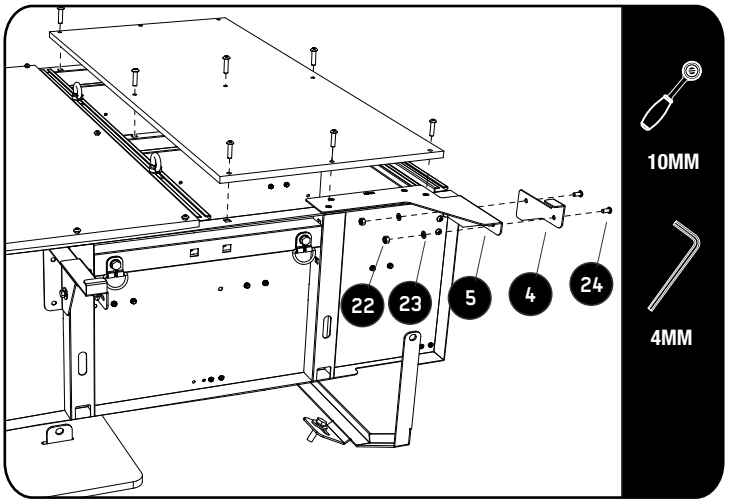

Loosen the rear deck and secure the rear wings as shown. Refer to 1.1 for wing placement.

© 2019 FRONT RUNNER VEHICLE OUTFITTERS

2 FIT AND SECURE

2.7

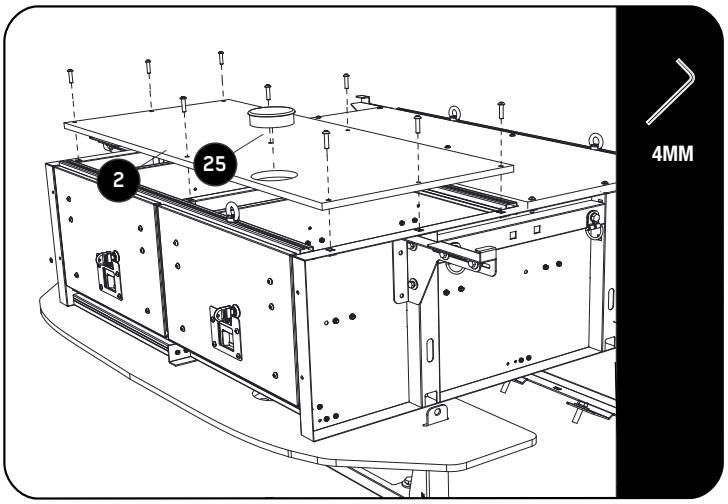

Remove the front top deck and replace it with item 2.

2.8

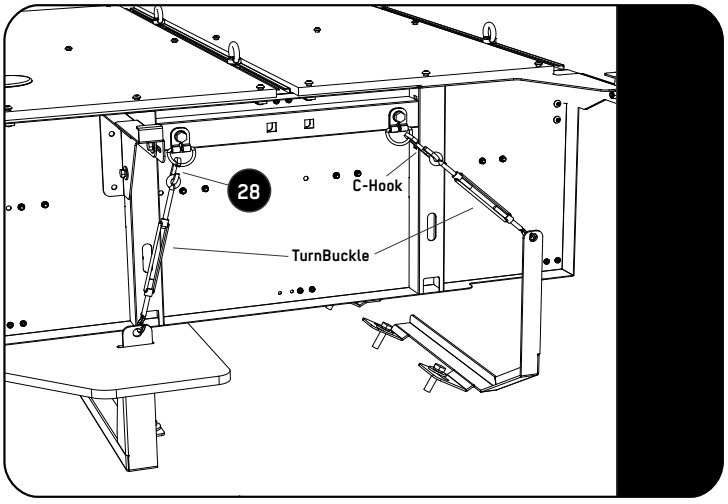

Secure the drawer to the tie-down point using the items shown in 3.5

The turnbuckles and c-hooks are supplied with SSDR005

Before securing the drawer, make sure that the rear door does not interfere with the drawer when colsed.

2.9

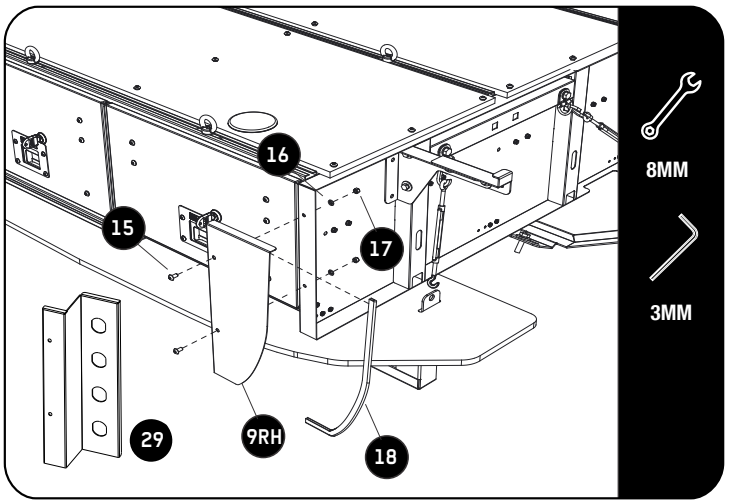

Assemble the two Front Faces (Item 9 or 29) to the Drawer System using M5 x 10 Button Head, M5 Flat Washer and M5 Nyloc Nut (Item 15, 16 & 17).

© 2019 FRONT RUNNER VEHICLE OUTFITTERS

2 FIT AND SECURE

2.10

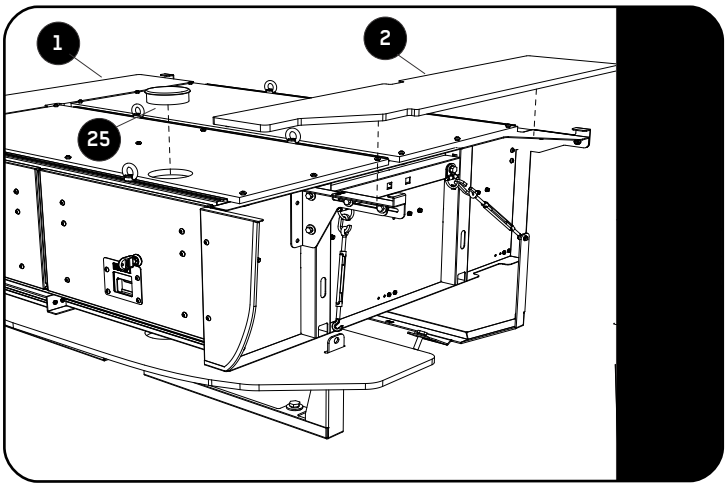

Fit the side decks (item 1 and 2).

LOWERING THE SPARE WHEEL

Remove item 25. Open the drawer and insert item 26 and 27 into the hole. Locate the wheel winder and turn to lower the wheel.

3 FITTING ELECTRICAL SOCKETS

3.1

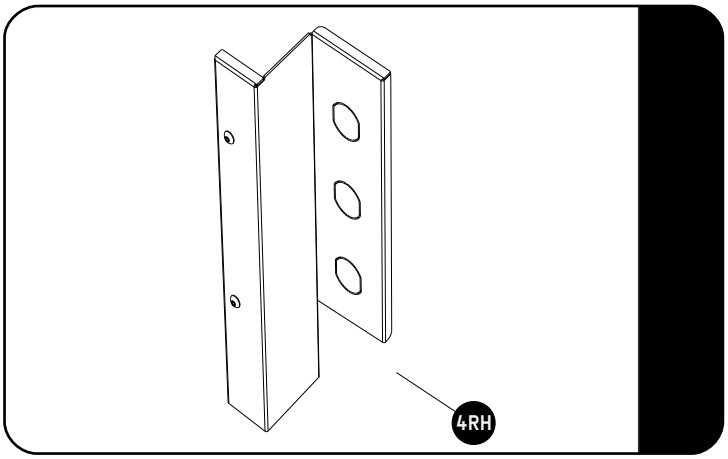

Twist the pre cut knock outs to remove. These cut outs can then be used to fit Front Runners range of electrical sockets. (Sold Separately)

ECOM117 - Amp
ECOM118 - USB
ECOM119 - 12/24V
ECOM120 - Merit
ECOM121 - Engel
ECOM124 - Volt

4 COMPLETION

Congratulations! You did it. Take a step back and admire your work!

5 INSTALL OTHER VEHICLE AND RACK ACCESSORIES

Now's the time to visit your favorite Front Runner Dealer in person or online.

Be sure to tag us. We love to see our gear in action! #FrontRunnerOutfitters #BornToRoam

Share your adventures on:

© 2019 FRONT RUNNER VEHICLE OUTFITTERS