DRAWER DECK COMPLETION SET

TOYOTA FORTUNER 2016-CURRENT

ENG

SSDS110

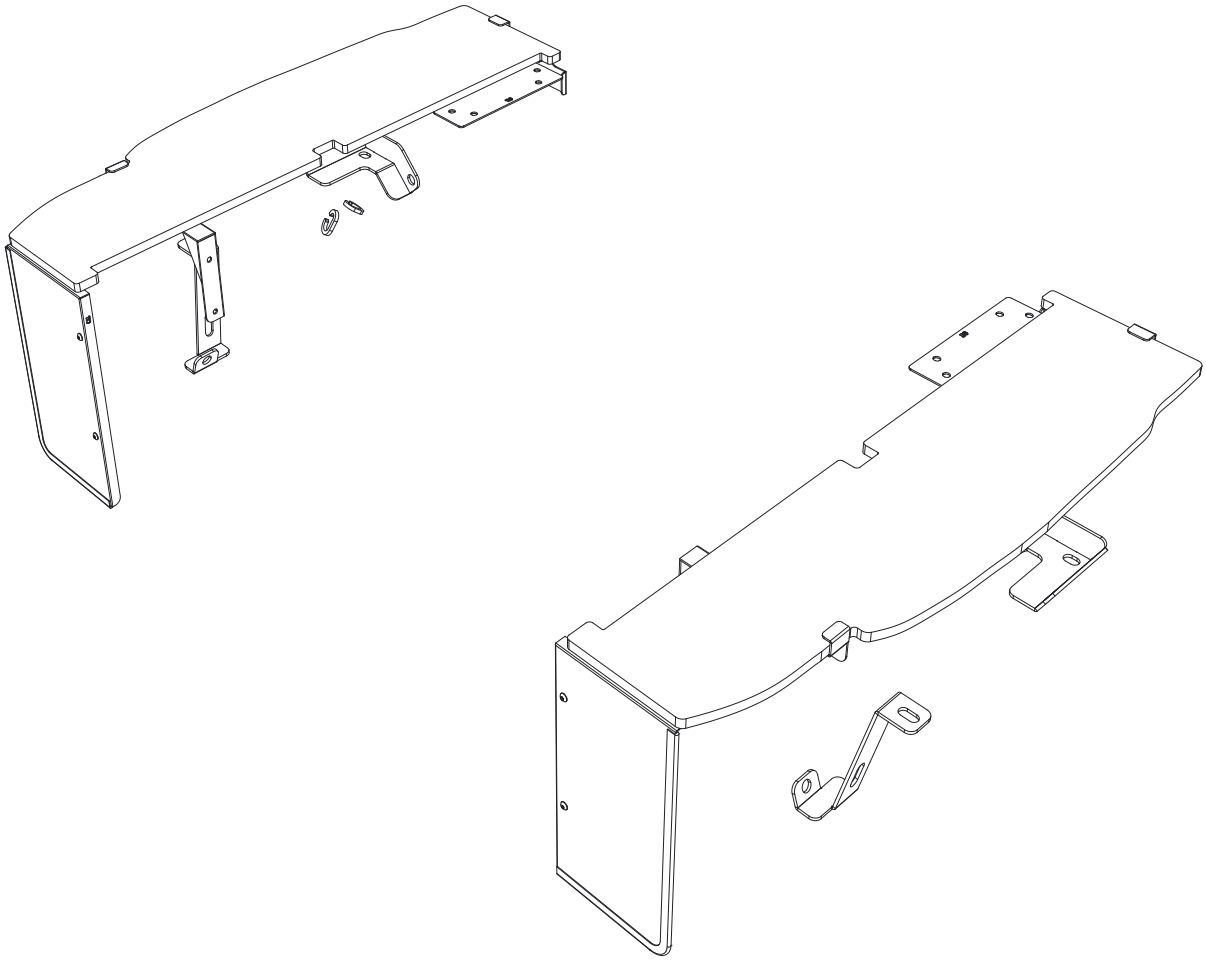

READ ME !

Thank you for purchasing a Front Runner Deck Completion Set.

Before you start, take a moment to familiarize yourself with this Fitting Instruction and the components received.

Refer to Page 2 for a list of all the components, quantities and tools required.

IMPORTANT WARNING!

IT IS CRITICAL THAT ALL FRONT RUNNER PRODUCTS BE PROPERLY AND SECURELY ASSEMBLED AND ATTACHED TO YOUR VEHICLE. IMPROPER ATTACHMENT COULD RESULT IN AN AUTOMOBILE ACCIDENT, AND COULD CAUSE SERIOUS BODILY INJURY OR DEATH. YOU ARE RESPONSIBLE FOR ASSEMBLING AND SECURING ALL FRONT RUNNER PRODUCTS TO YOUR VEHICLE, CHECKING THE ATTACHMENTS PRIOR TO USE, AND PERIODICALLY INSPECTING THE PRODUCTS FOR ADJUSTMENT, WEAR AND DAMAGE. THEREFORE, YOU MUST READ AND UNDERSTAND ALL OF THE INSTRUCTIONS AND PRECAUTIONS SUPPLIED WITH YOUR FRONT RUNNER PRODUCT PRIOR TO INSTALLATION OR USE. IF YOU DO NOT UNDERSTAND ALL OF THE INSTRUCTIONS AND CAUTIONS, OR IF YOU HAVE NO MECHANICAL EXPERIENCE AND ARE NOT THOROUGHLY FAMILIAR WITH THE INSTALLATION PROCEDURES, YOU SHOULD HAVE THE PRODUCT INSTALLED BY A PROFESSIONAL INSTALLER OR OTHER QUALIFIED PERSONNEL.

NOTE: Front Runner will not be responsible for any damage caused by the failure to install the product according to these instructions.
Please call us if you have any questions about the installation of this product.

© 2019 FRONT RUNNER VEHICLE OUTFITTERS

1 GET ORGANIZED

IN THE BOX

1	1 X	Side Deck LH
2	1 X	Side Deck RH
3	2 X	Rear Tie-Down Bracket LH And RH
4	2 X	Drawer Front Ajustable Bracket LH And RH
5	2 X	Front Tie-Down Bracket LH And RH
6	2 X	Front Face LH And RH
7	2 X	Drawer Front Fixed Bracket LH And RH
8	2 X	Drawer Rear Mount LH And RH
9	2 X	Drawer Rear Mount Clamp LH and Rh
10	4 X	M6x12 Button Head
11	4 X	M6 Flat Washer
12	8 X	M6 Nyloc Nut
13	12 X	M6x19x1SS Flat Washer
14	4 X	Carabiner Hook 37mm
15	4 X	M6 Spring Washer
16	8 X	M6x16 Hex Bolt
17	4 X	M5 Nyloc
18	4 X	M5x10x1SS Flat Washer
19	4 X	M5x10 Button Head
20	2 X	Pinchweld 465mm
21	2 X	Front Face 1LH + 1RH - With Knockouts

TOOLS NEEDED

10MM

8MM
10MM
13MM
14MM

3MM
4MM

FIGURE 1.1

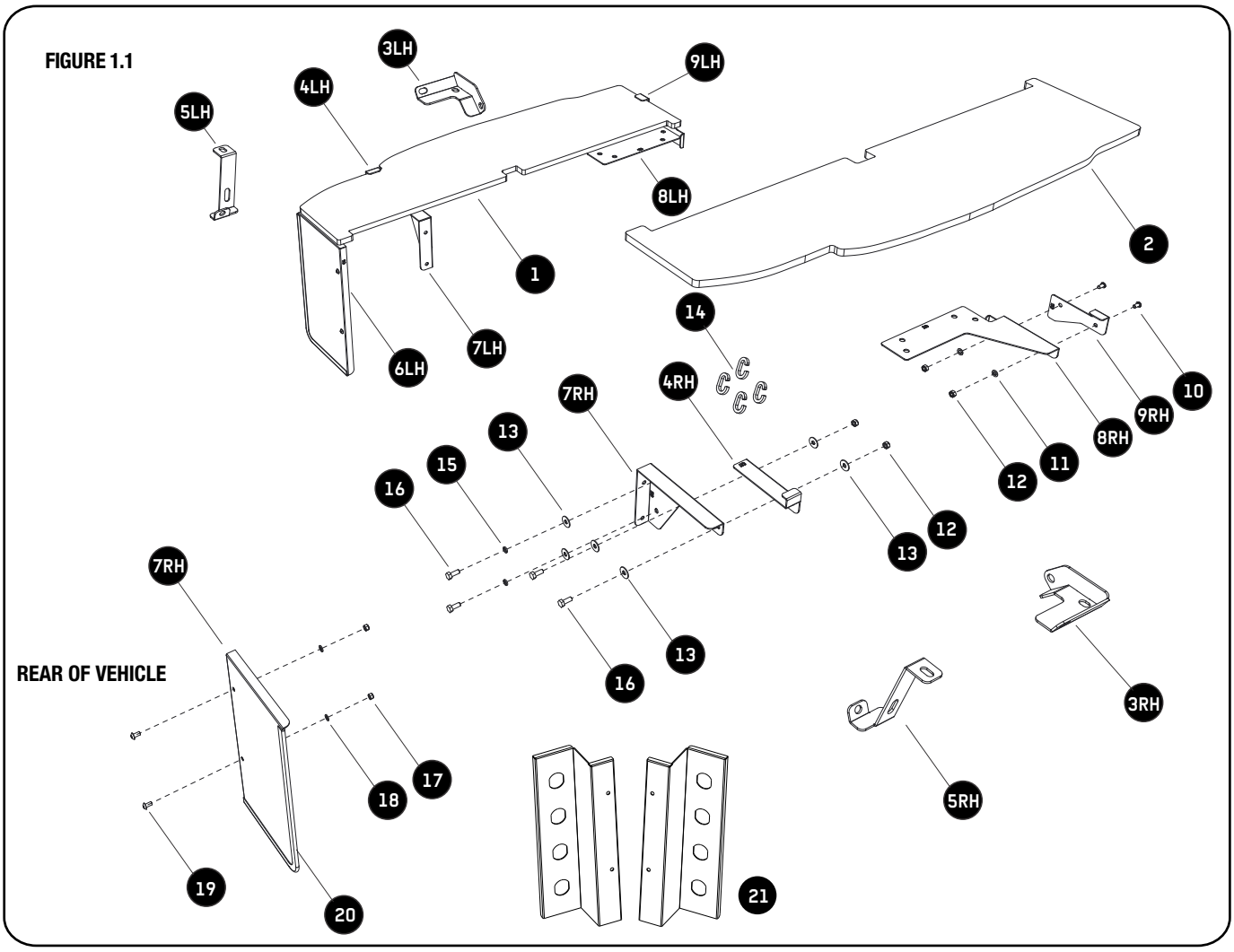

© 2019 FRONT RUNNER VEHICLE OUTFITTERS

2 FIT AND SECURE

2.1

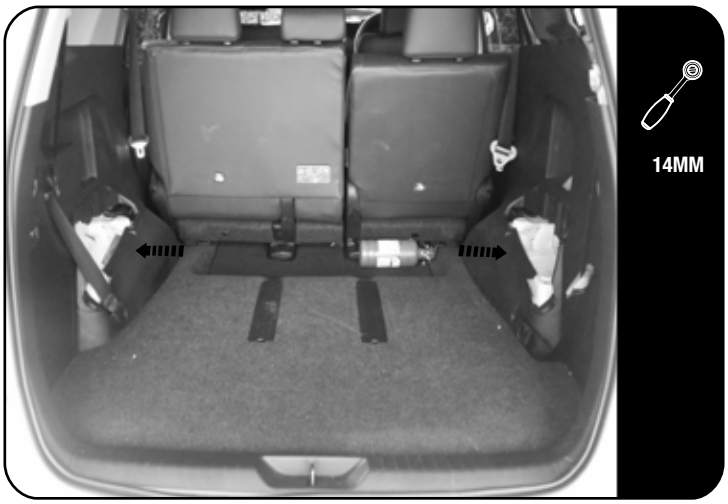

Remove the the rear jump seats.

2.2

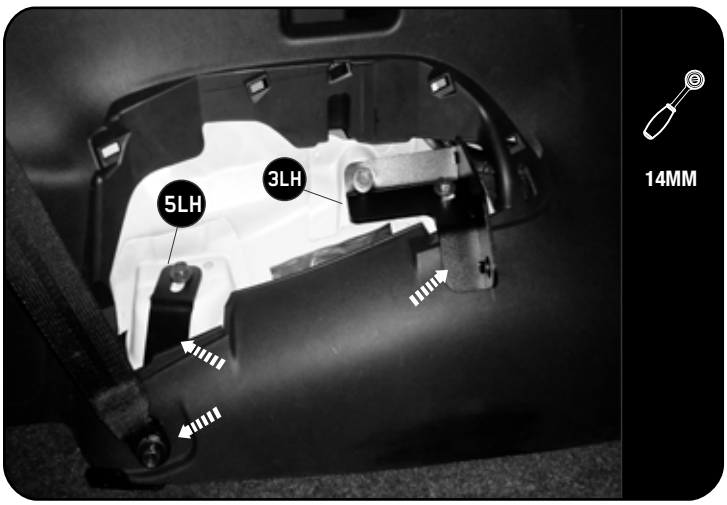

Secure the front and rear tie-down bracket using the existing bolts you removed from the seats and the bottom seat belt bolts. Do this on left and right side of the vehicle.

2.3

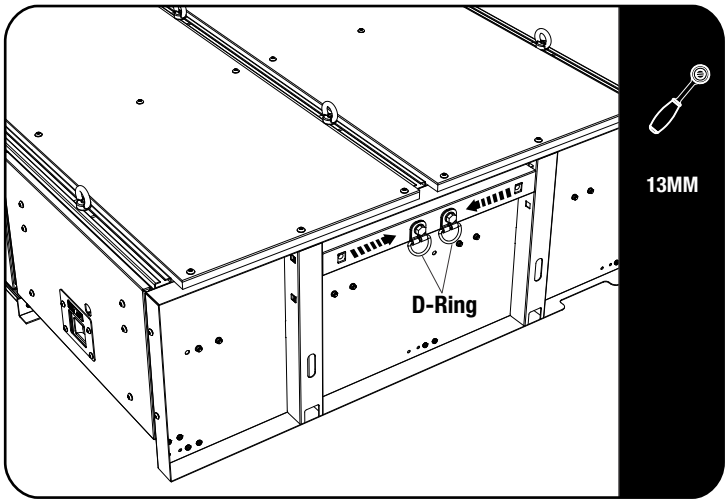

Move the 2 D-rings to the middle mounting holes as shown .

© 2019 FRONT RUNNER VEHICLE OUTFITTERS

2 FIT AND SECURE

2.4

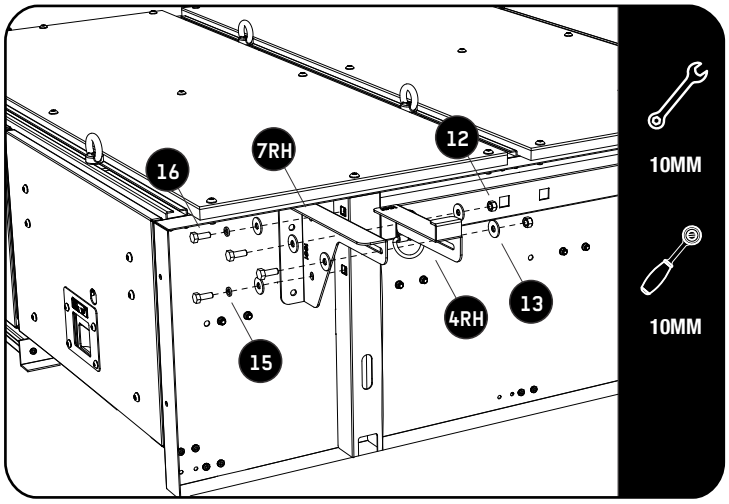

Place the drawer in the vehicle before assembling the wings to the drawer. Refer to 1.1 for wing placement.

2.5

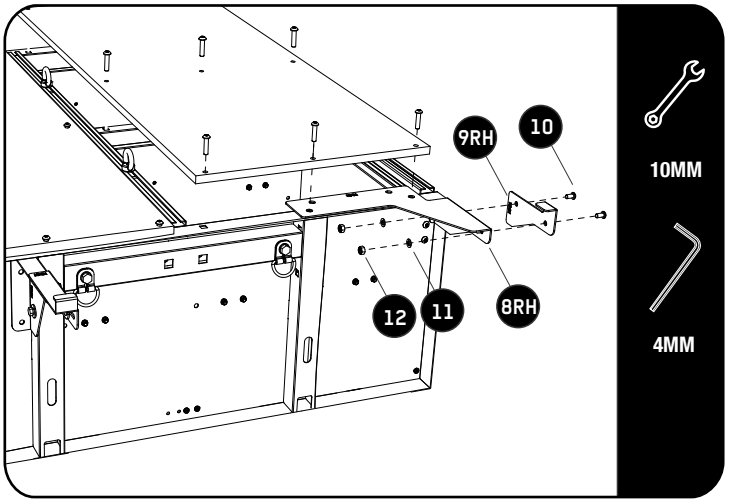

Loosen the rear deck and secure the rear wings as shown. Refer to 1.1 for wing placement.

2.6

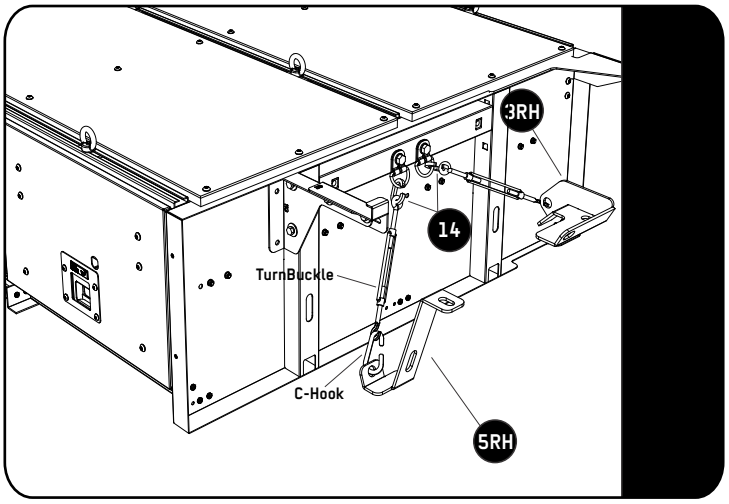

Secure the drawer to the tie-down points using the items shown in 2.6

The turnbuckles and C-hooks are supplied with SSDR005

Before securing the drawer, make sure that the rear door does not interfere with the drawer.

© 2019 FRONT RUNNER VEHICLE OUTFITTERS

2 FIT AND SECURE

2.7

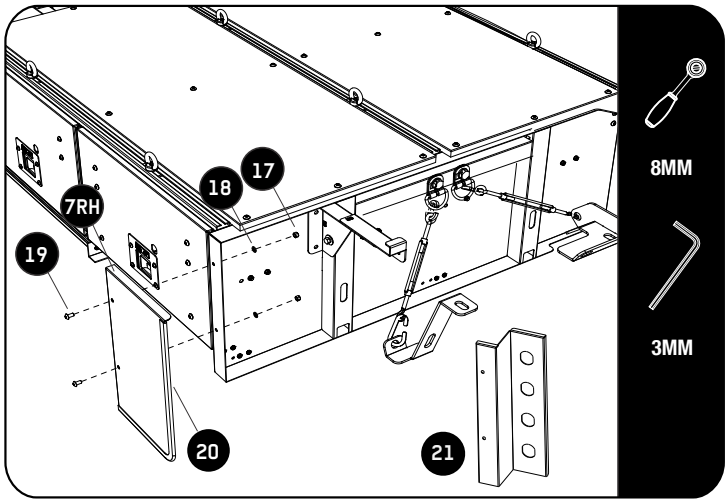

Assemble the two Front Faces (Item 20 or 21) to the Drawer System using M5 x 10 Button Head, M5 Flat Washers and M5 Nyloc Nuts (Item 17, 18 & 19).

2.8

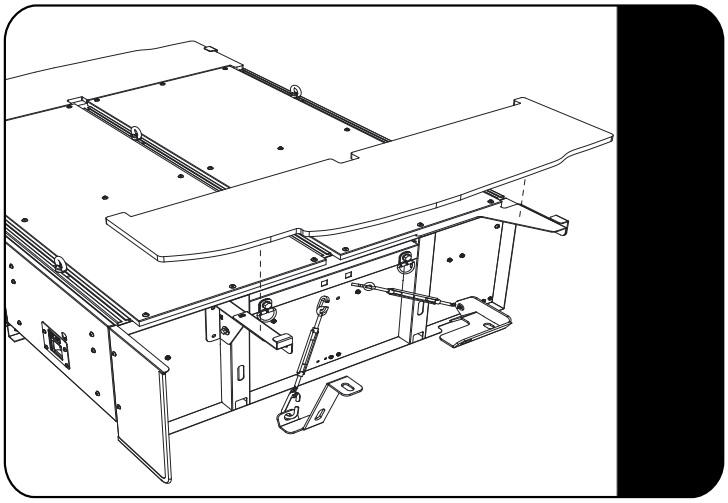

Fit the side decks (item 1 and 2).

© 2019 FRONT RUNNER VEHICLE OUTFITTERS

3 FITTING ELECTRICAL SOCKETS

3.1

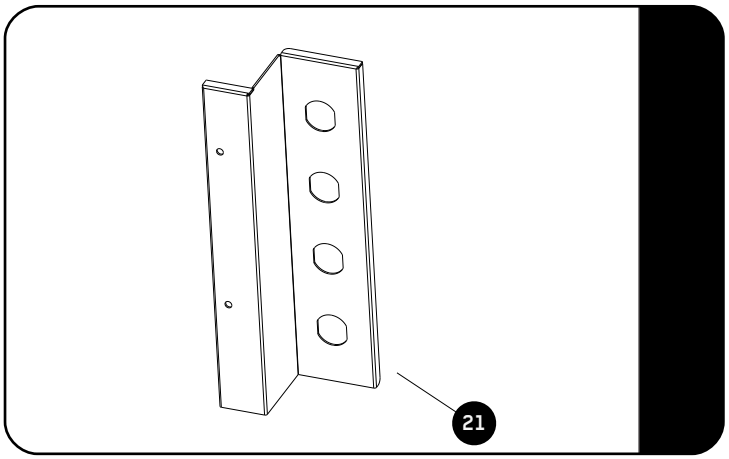

Twist the pre cut knock outs to remove. These cut outs can then be used to fit Front Runners range of electrical sockets. (Sold Separately)

ECOM117 - Amp
ECOM118 - USB
ECOM119 - 12/24V
ECOM120 - Merit
ECOM121 - Engel
ECOM124 - Volt

4 COMPLETION

Congratulations! You did it. Take a step back and admire your work!

5 INSTALL OTHER VEHICLE AND RACK ACCESSORIES

Now's the time to visit your favorite Front Runner Dealer in person or online.

Be sure to tag us. We love to see our gear in action! #FrontRunnerOutfitters #BornToRoam

Share your adventures on:

© 2019 FRONT RUNNER VEHICLE OUTFITTERS