DRAWER DECK COMPLETION SET

TOYOTA HILUX REVO DC (2016-CURRENT)

ENG

SSDS109

45 min

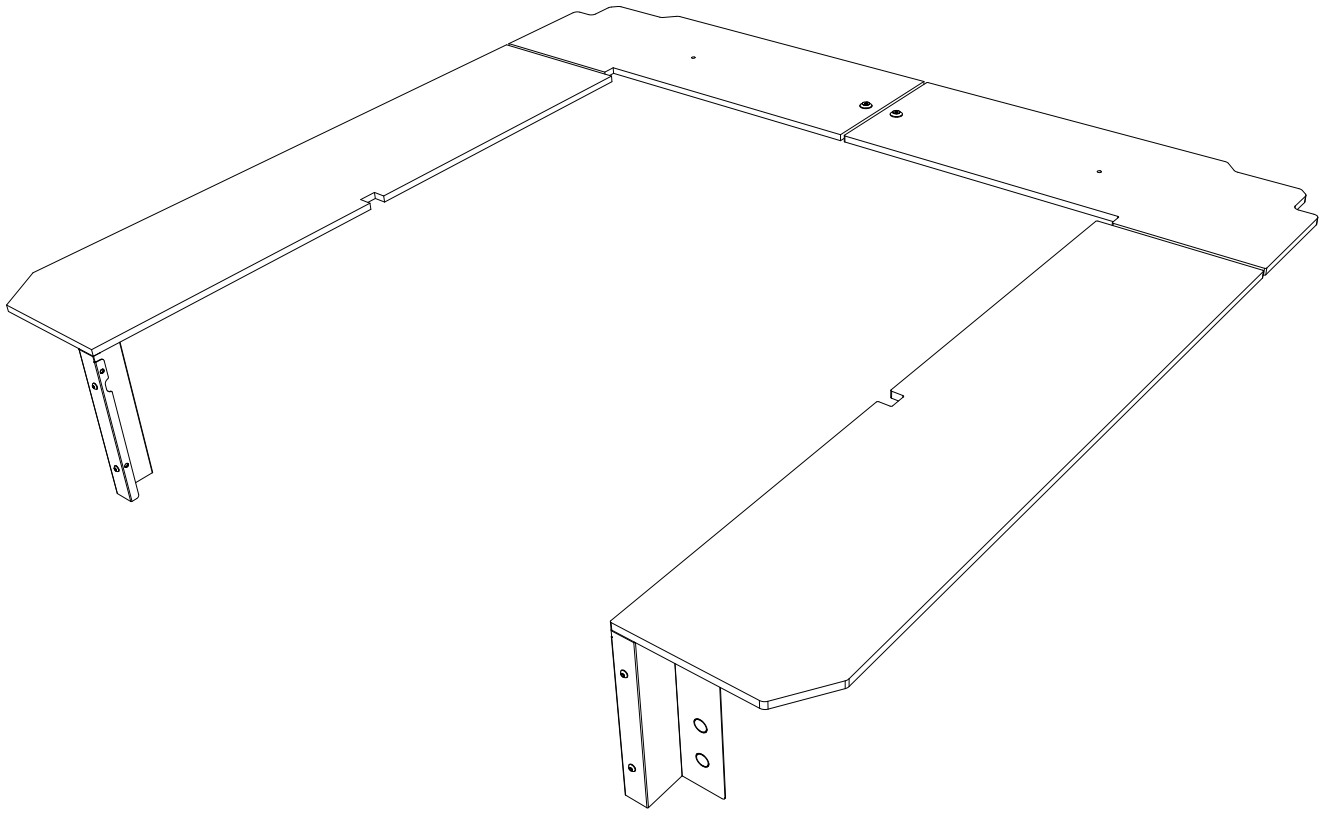

READ ME!

Thank you for purchasing a Front Runner Deck Completion Set.

Before you start, take a moment to familiarize yourself with this Fitting Intruction and the components received.

Refer to Page 2 for a list of all the components, quantities and tools required.

IMPORTANT WARNING!

IT IS CRITICAL THAT ALL FRONT RUNNER PRODUCTS BE PROPERLY AND SECURELY ASSEMBLED AND ATTACHED TO YOUR VEHICLE. IMPROPER ATTACHMENT COULD RESULT IN AN AUTOMOBILE ACCIDENT, AND COULD CAUSE SERIOUS BODILY INJURY OR DEATH. YOU ARE RESPONSIBLE FOR ASSEMBLING AND SECURING ALL FRONT RUNNER PRODUCTS TO YOUR VEHICLE. CHECKING THE ATTACHMENTS PRIOR TO USE, AND PERIODICALLY INSPECTING THE PRODUCTS FOR ADJUSTMENT, WEAR AND DAMAGE. THEREFORE YOU MUST READ AND UNDERSTAND ALL OF THE INSTRUCTIONS AND PRECAUTIONS SUPPLIED WITH YOUR FRONT RUNNER PRODUCT PRIOR TO INSTALLATION OR USE. IF YOU DO NOT UNDERSTAND ALL OF THE INSTRUCTIONS AND CAUTIONS, OR IF YOU HAVE NO MECHANICAL EXPERIENCE AND ARE NOT THOROUGHLY FAMILIAR WITH THE INSTALLATION PROCEDURES, YOU SHOULD HAVE THE PRODUCT INSTALLED BY A PROFESSIONAL INSTALLER OR OTHER QUALIFIED PERSONNEL.

© COPYRIGHT 2016 FRONT RUNNER VEHICLE OUTFITTERS

1 GET ORGANIZED

Here is what you are looking at for SSDS109

IN THE BOX

1	1 X	Side Deck LH
2	1 X	Rear Deck LH
3	1 X	Rear Deck RH
4	1 X	Side Deck RH
5	1 X	Front Face RH
6	1 X	Front Face LH
7	4 X	Button Head M6x16
8	4 X	Flat Washer M6
9	8 X	Nyloc Nut M6
10	4 X	Carabiner Laser Cut Hook - 115mm Long
11	8 X	Flat Washer M6x19x1
12	4 X	D-Ring M8
13	4 X	Hex Bolt M6x25
14	2 X	Finishing Washer
15	2 X	Countersunk Screw M6x30

TOOLS NEEDED

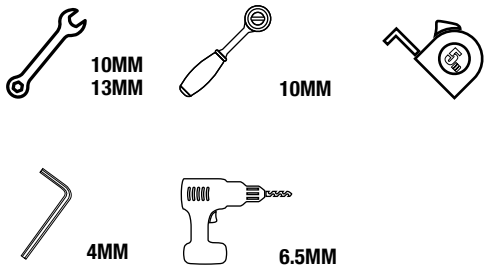

FIGURE 1.1

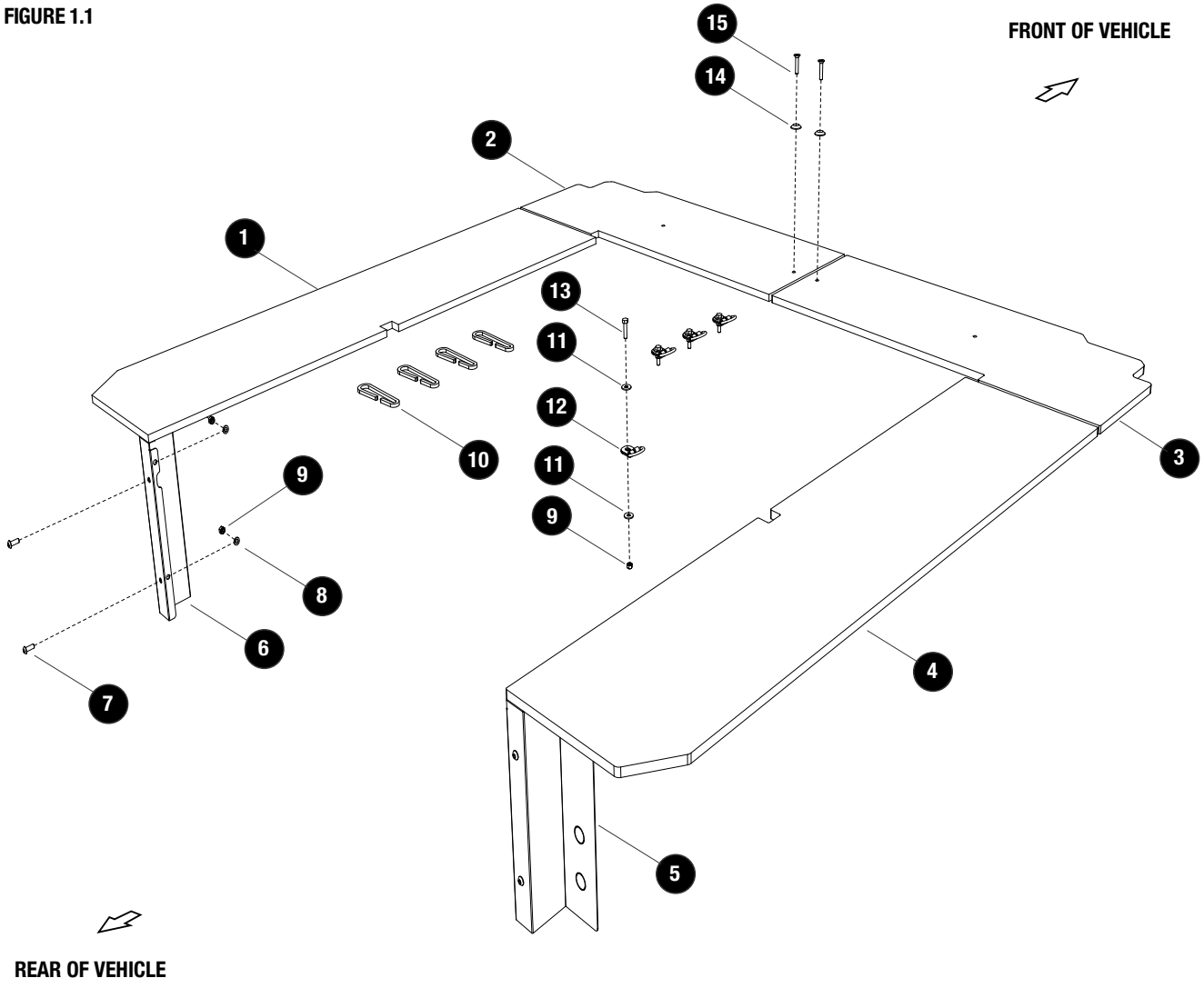

 © COPYRIGHT 2016 FRONT RUNNER VEHICLE OUTFITTERS

2 FIT AND SECURE

2.1

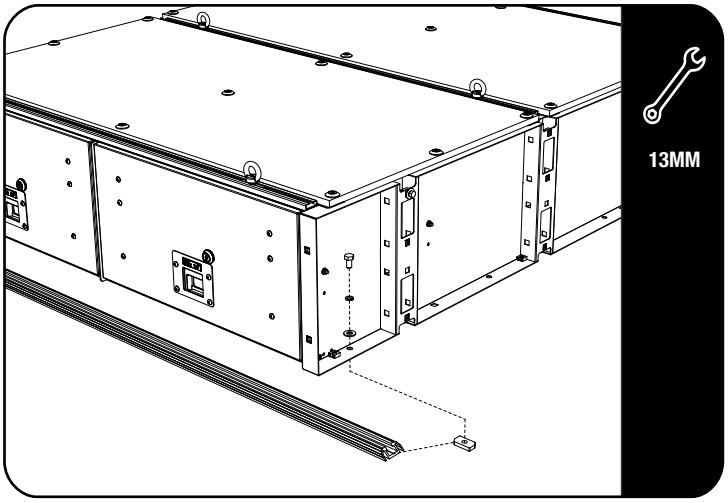

Place the drawer in the vehicle.
Fix the track to the drawer.
Refer to SSDR010 Fitment Guide.

2.2

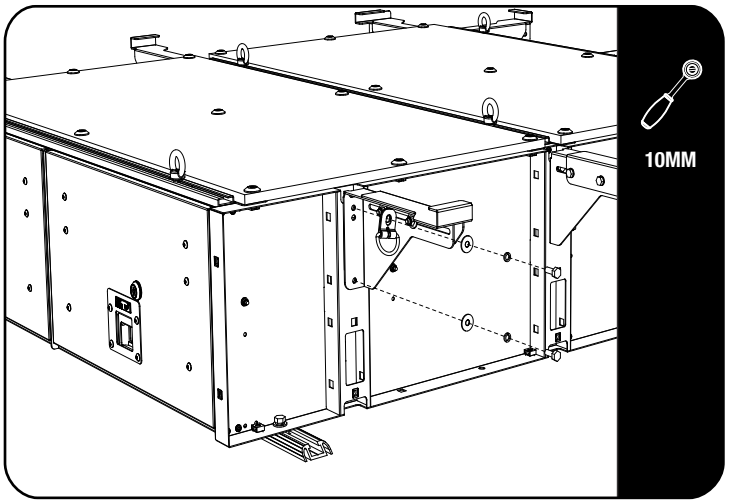

Fix the wing set to the drawer.
Refer to SSWS001 Fitment Guide

Fix the D-rings to the drawer.
D-rings are supplied with SSDR010.

See diagram 2.2 for placement of the D-ring at the front right side of the drawer. Repeat this step on the left side of the drawer.

2.3

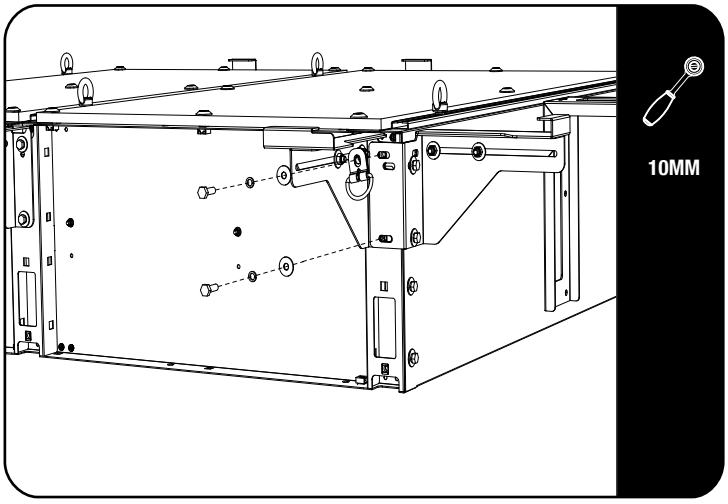

See diagram 2.3 for placement of the D-ring at the rear right side of the drawer. Repeat this step on the left side of the drawer.

© COPYRIGHT 2016 FRONT RUNNER VEHICLE OUTFITTERS

2 FIT AND SECURE

2.4

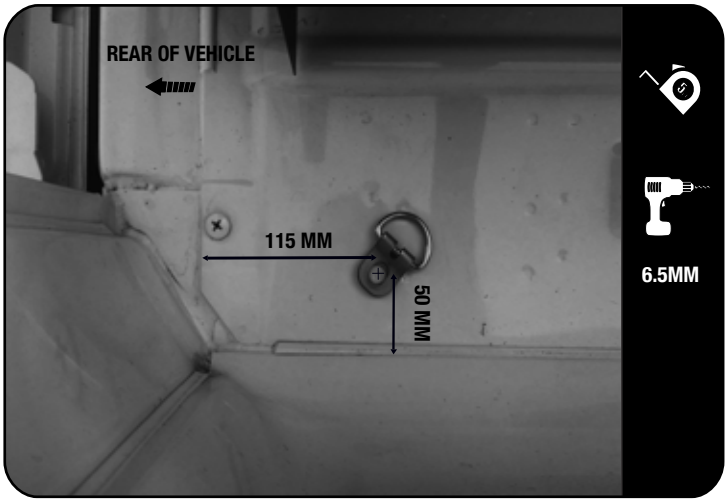

On the rear right side of the load bin mark the dimensions as per diagram.
Drill a 6.5mm hole.
Repeat this on the left side.

2.5

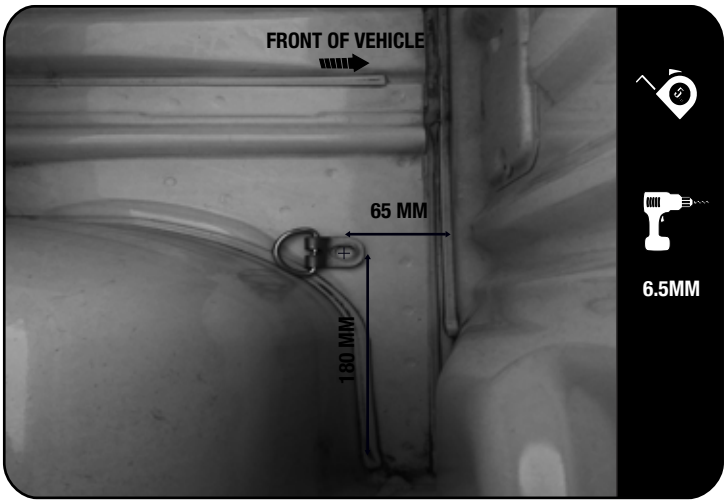

On the front right hand side of the vehicle mark the dimensions as per diagram.
Drill a 6.5mm hole.
Repeat this on the left side.

2.6

Move the front of the drawer 50mm from the rear of the vehicle and centralize the drawer from left to right.

 © COPYRIGHT 2016 FRONT RUNNER VEHICLE OUTFITTERS

2 FIT AND SECURE

2.7

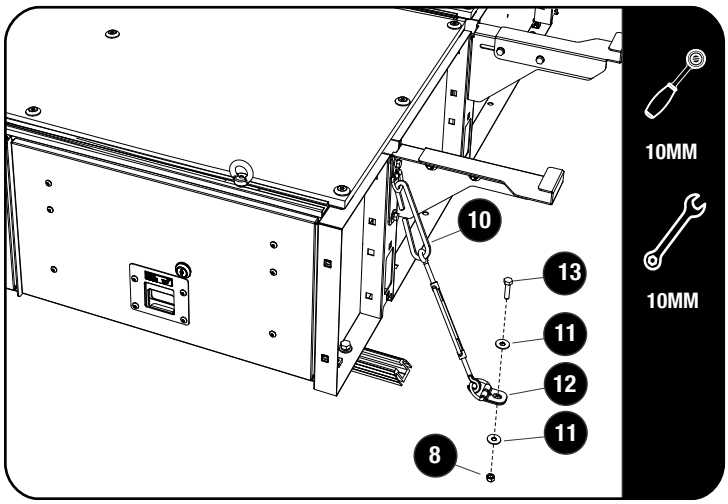

FRONT OF DRAWER

Secure the 4 D-rings to the load bay. Connect item 10 and the turnbuckle as per diagram.

Refer to SSDR010 for the assembly of the turnbuckles.

Fit the turnbuckles loosely on all four corners. Make sure the drawer is centralized in the load bin and 50mm from the rear of the vehilce before you fully tightening the turnbuckles.

2.8

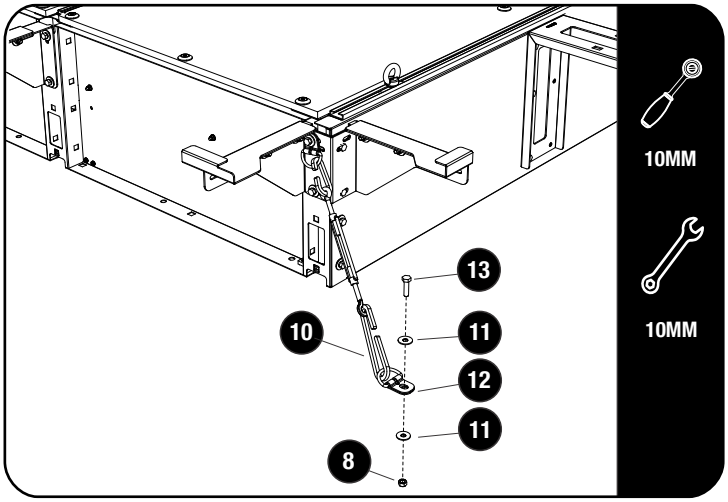

FRONT OF DRAWER

REAR OF DRAWER

Secure the 4 D-rings to the load bay. Connect the C-hook, item 10 and the turnbuckle as per diagram.

Refer to SSDR010 for the assembly of the turnbuckles.

Fit the turnbuckles loosely on all four corners. Make sure the drawer is centralized in the load bin and 50mm from the rear of the vehilce before you fully tightening the turnbuckles.

2.9

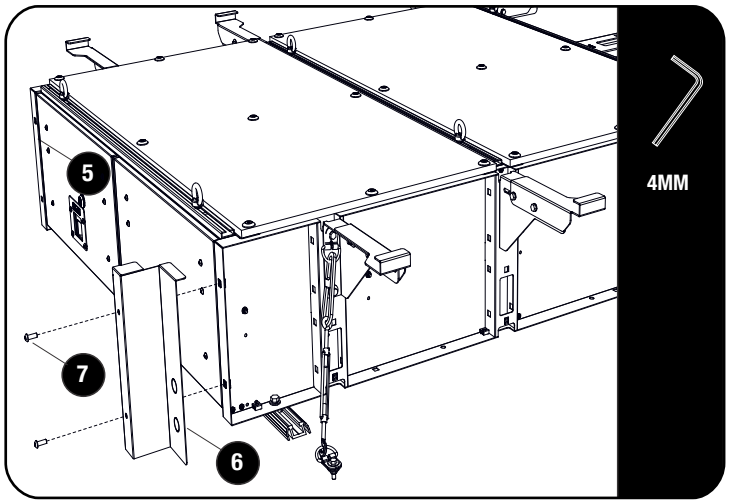

Place the front faces to the drawer and secure.

© COPYRIGHT 2016 FRONT RUNNER VEHICLE OUTFITTERS

2 FIT AND SECURE

2.10

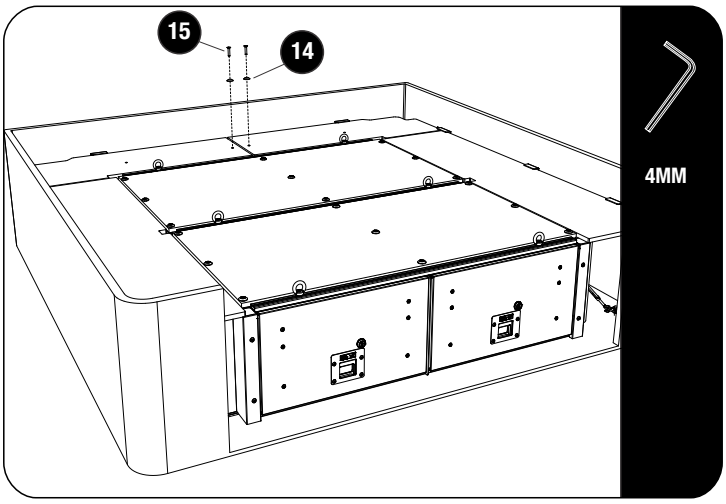

Fit the side and rear decks.
Secure the rear decks as per diagram with the fasterers supplied.

3 COMPLETION

3.1

Congratulations. You did it. Take a step back and admire your work!

4 INSTALL OTHER VEHICLE AND RACK ACCESSORIES

Now's the time to visit your favorite Front Runner Dealer in person or online.

© COPYRIGHT 2016 FRONT RUNNER VEHICLE OUTFITTERS