FRONT RUNNER
VEHICLE OUTFITTERS

TOYOTA HILUX DECK COMPLETION SET

ENG

SSDS108

90 min

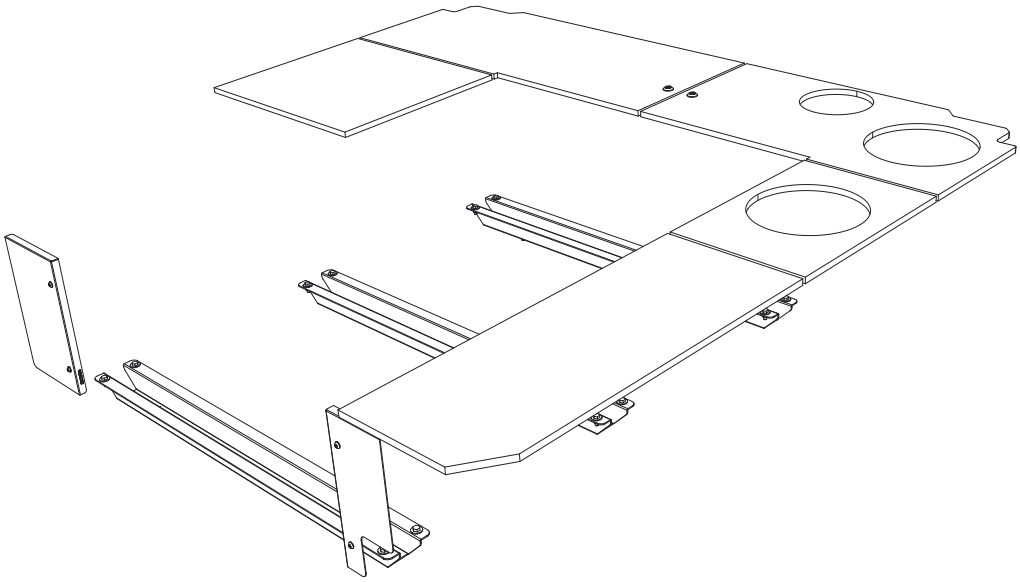

Thank you for purchasing a Front Runner Deck Completion Set.

Before you start, take a moment to familiarize yourself with this Fitting Intruction and the components received.

Refer to Page 2 for a list of all the components, quantities and tools required.

IMPORTANT WARNING! ⚠

IT IS CRITICAL THAT ALL FRONT RUNNER PRODUCTS BE PROPERLY AND SECURELY ASSEMBLED AND ATTACHED TO YOUR VEHICLE.

IMPROPER ATTACHMENT COULD RESULT IN AN AUTOMOBILE ACCIDENT, AND COULD CAUSE SERIOUS BODILY INJURY OR DEATH.

YOU ARE RESPONSIBLE FOR ASSEMBLING AND SECURING ALL FRONT RUNNER PRODUCTS TO YOUR VEHICLE. CHECKING THE ATTACHMENTS PRIOR TO USE, AND PERIODICALLY INSPECTING THE PRODUCTS FOR ADJUSTMENT, WEAR AND DAMAGE.

THEREFORE YOU MUST READ AND UNDERSTAND ALL OF THE INSTRUCTIONS AND PRECAUTIONS SUPPLIED WITH YOUR FRONT RUNNER PRODUCT PRIOR TO INSTALLATION OR USE.

IF YOU DO NOT UNDERSTAND ALL OF THE INSTRUCTIONS AND CAUTIONS, OR IF YOU HAVE NO MECHANICAL EXPERIENCE AND ARE NOT THOROUGHLY FAMILIAR WITH THE INSTALLATION PROCEDURES,

YOU SHOULD HAVE THE PRODUCT INSTALLED BY A PROFESSIONAL INSTALLER OR OTHER QUALIFIED PERSONNEL.

© COPYRIGHT 2016 FRONT RUNNER VEHICLE OUTFITTERS

1 GET ORGANIZED

Here is what you are looking at for SSDS108

IN THE BOX

1	1 X	Side Deck LH
2	1 X	Rear Deck LH
3	1 X	Rear Deck RH
4	1 X	Side Deck RH Middle
5	1 X	Side Deck RH Front
6	3 X	Channel
7	1 X	Front Face RH
8	1 X	Front Face LH
9	2 X	M6x30 Countersink Screw
10	2 X	M6 Finishing Washer
11	12 X	M6x16 Hex Bolt
12	6 X	M8x20 Hex Bolt
13	4 X	M6x12 Button Head
14	24 X	M6x19x1ss Flat Washer
15	12 X	M6 Nyloc
16	12 X	M8x19x3 Flat Washer
17	6 X	M8 Nyloc

TOOLS NEEDED

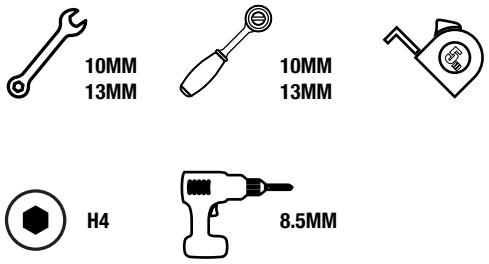

FIGURE 1.1

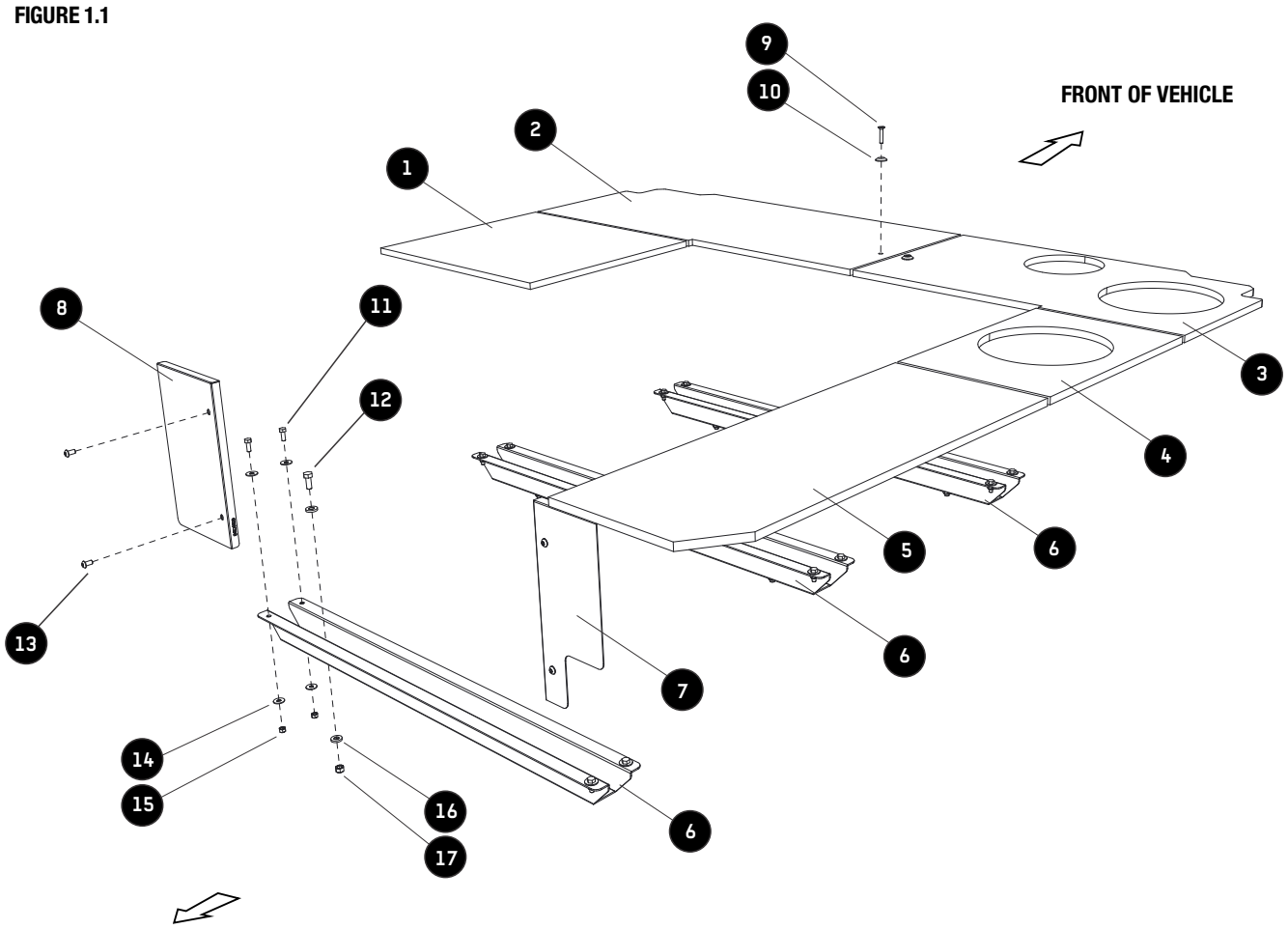

 © COPYRIGHT 2016 FRONT RUNNER VEHICLE OUTFITTERS

2 FIT AND SECURE

2.1

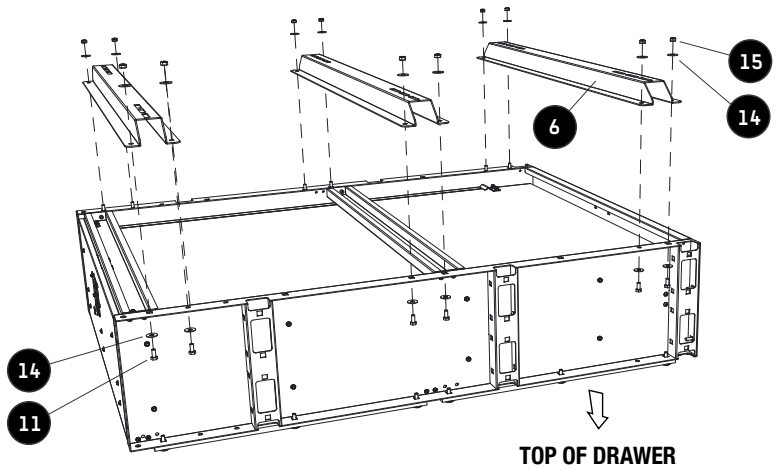

2.2

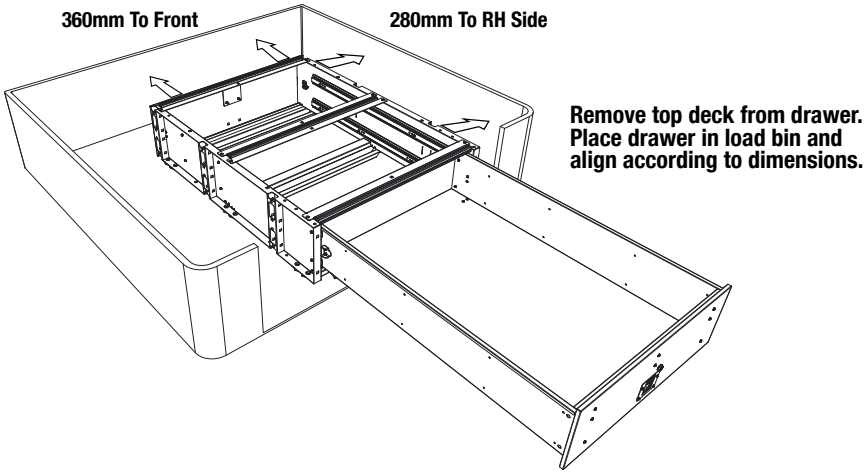

Remove top deck from drawer. Place drawer in load bin and align according to dimensions.

2.3

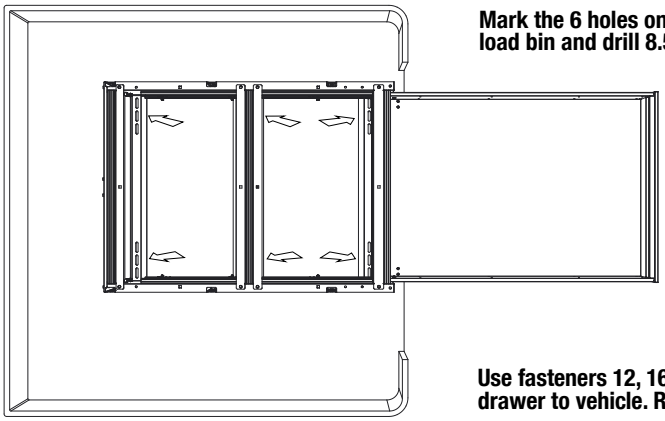

Mark the 6 holes on the ribs of the load bin and drill 8.5mm

Use fasteners 12, 16 and 17 to secure drawer to vehicle. Refer to 1.1

© COPYRIGHT 2016 FRONT RUNNER VEHICLE OUTFITTERS

2 FIT AND SECURE

2.4

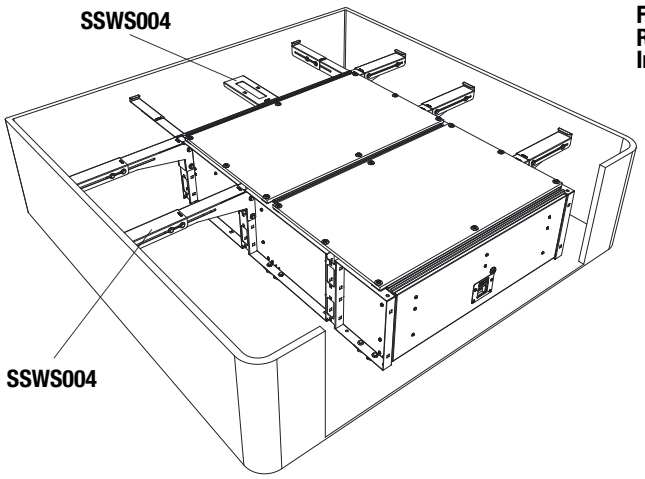

Fit SSWS004 to Drawer. Refer to SSWS004 Fitting Instruction.

2.5

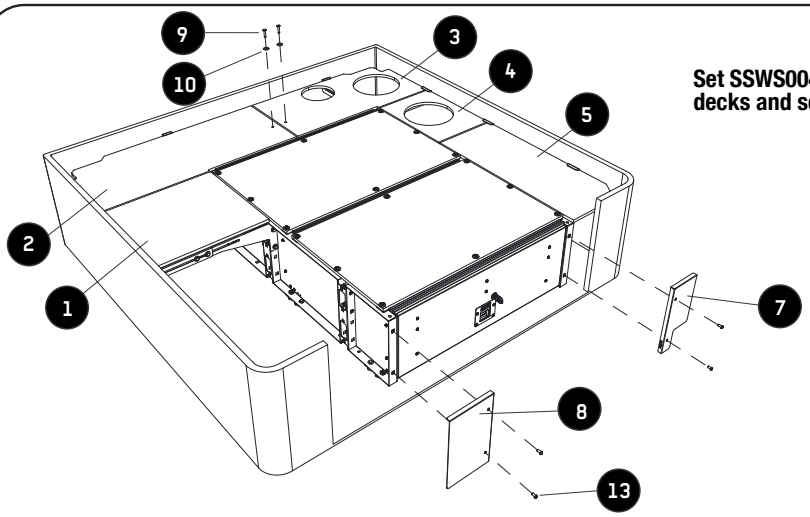

Set SSWS004 according to decks and secure.

Congratulations you have completed your installation, take a step back and admire your work.

4 INSTALL OTHER VEHICLE AND RACK ACCESSORIES

Now's the time to visit your favorite Front Runner Dealer in person or online.

© COPYRIGHT 2016 FRONT RUNNER VEHICLE OUTFITTERS