FRONT RUNNER

TOYOTA PRADO 120 / LEXUS GX 470 DRAWER DECK COMPLETION SET

ENG

SSDS106

INSTALL TIME: 45 mins

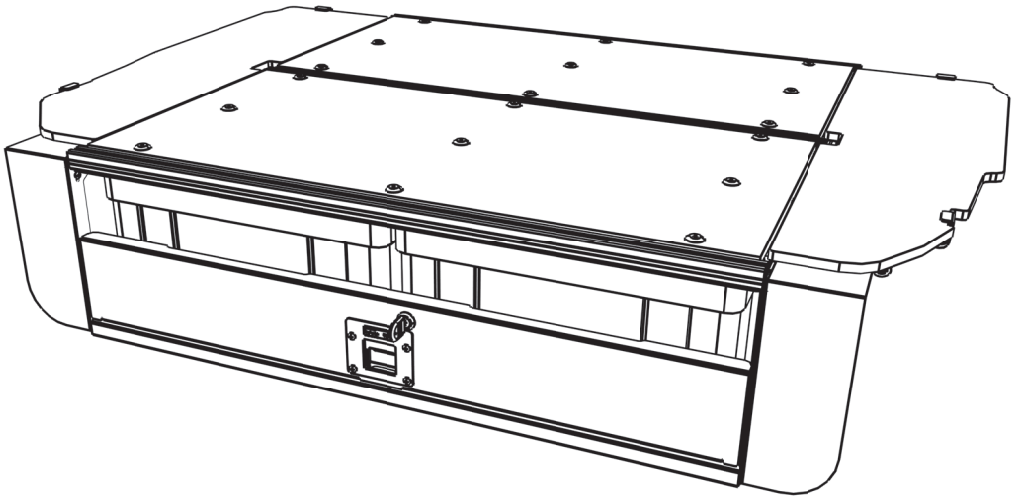

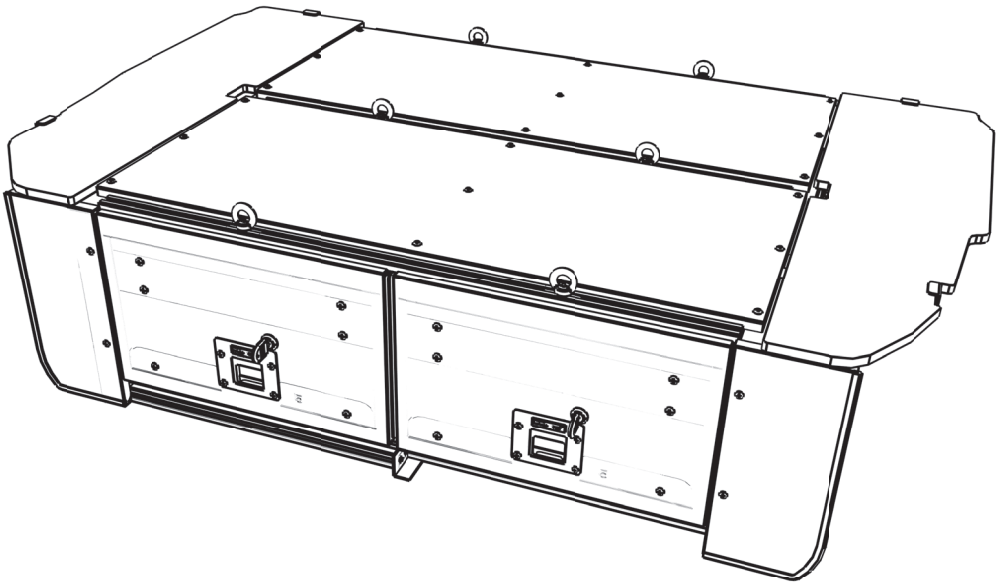

IMPORTANT WARNING!

IT IS CRITICAL THAT ALL FRONT RUNNER PRODUCTS BE PROPERLY AND SECURELY ASSEMBLED AND ATTACHED TO YOUR VEHICLE. IMPROPER ATTACHMENT COULD RESULT IN AN AUTOMOBILE ACCIDENT, AND COULD CAUSE SERIOUS BODILY INJURY OR DEATH TO YOU OR TO OTHERS. YOU ARE RESPONSIBLE FOR ASSEMBLING AND SECURING ALL FRONT RUNNER PRODUCTS TO YOUR VEHICLE, CHECKING THE ATTACHMENTS PRIOR TO USE, AND PERIODICALLY INSPECTING THE PRODUCTS FOR ADJUSTMENT, WEAR, AND DAMAGE. THEREFORE, YOU MUST READ AND UNDERSTAND ALL OF THE INSTRUCTIONS AND CAUTIONS SUPPLIED WITH YOUR FRONT RUNNER PRODUCT PRIOR TO INSTALLATION OR USE. IF YOU DO NOT UNDERSTAND ALL OF THE INSTRUCTIONS AND CAUTIONS, OR IF YOU HAVE NO MECHANICAL EXPERIENCE AND ARE NOT THOROUGHLY FAMILIAR WITH THE INSTALLATION PROCEDURES, YOU SHOULD HAVE THE PRODUCT INSTALLED BY A PROFESSIONAL INSTALLER OR OTHER QUALIFIED PERSONNEL.

© COPYRIGHT 2016 FRONT RUNNER VEHICLE OUTFITTERS

1 GET ORGANIZED...

Here is what you are looking at for SSDS106:

Auto #	Qty	Name
1	4	LASER CUT CARIBINER 115mm
2	2	LASER CARABINER HOOK 37mm
3	1	SIDE DECK RH WOODCP
4	1	SIDE DECK LH WOODCP
5	2	DRAWER REAR BRACKET 2 - 1LH 1RH
6	4	M6x12 BUTTON HD SOCKET SCREW
7	2	DRAWER REAR BRACKET 1 - 1LH 1RH
8	8	M6 HEX NUT- NYLOC
9	8	M6x16 HEX HEAD BOLT
10	4	M6 SPRING WASHER
11	12	M6x19x1SS FLAT WASHER
12	2	DRAWER FRONT AJUSTABLE BRACKET - 1LH 1RH
13	2	DRAWER FRONT BRACKET - 1LH 1RH
14	4	M5 HEX NUT- NYLOC
15	4	M5 SS FLAT WASHER
16	4	M5x10 BUTTON HD SOCKET SCREW
17	2	FRONT FACE FOR SSAM014 - 1LH 1RH
18	2	FRONT FACE FOR SSDR005 - 1LH 1RH
19	2	PINCH WELD 455mm LONG

You will need:

- ☐ 10mm Flat or Socket Wrench
- ☐ 8mm Flat or Socket Wrench
- ☐ 3mm Hex Key
- ☐ 4mm Hex Key
- ☐ 5mm Hex Key

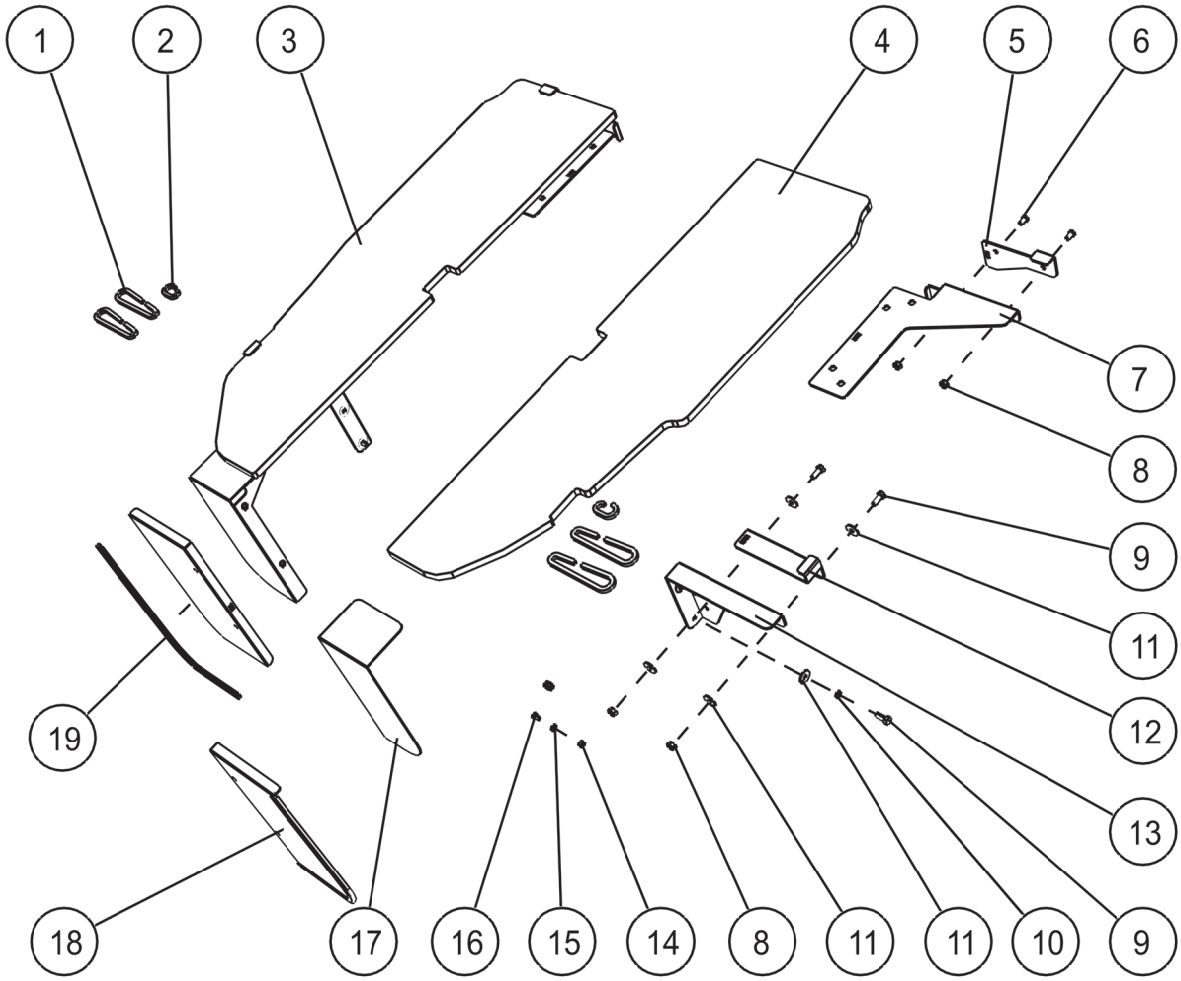

© COPYRIGHT 2016 FRONT RUNNER VEHICLE OUTFITTERS

2 SSAM014 DECK COMPLETION SET INSTALLATION

(A) **With SSAM014 placed in the vehicle. Remove the rear carpeted Deck (Item E) by unscrewing the nine Counter Sunk screws (Item C). Unscrew (Item A) and discard (Item B). Assemble (Items 6, 5, 7 & 8) and fasten Rear Brackets as shown with (Item A). Repeat for right hand side Bracket and refit Deck.**

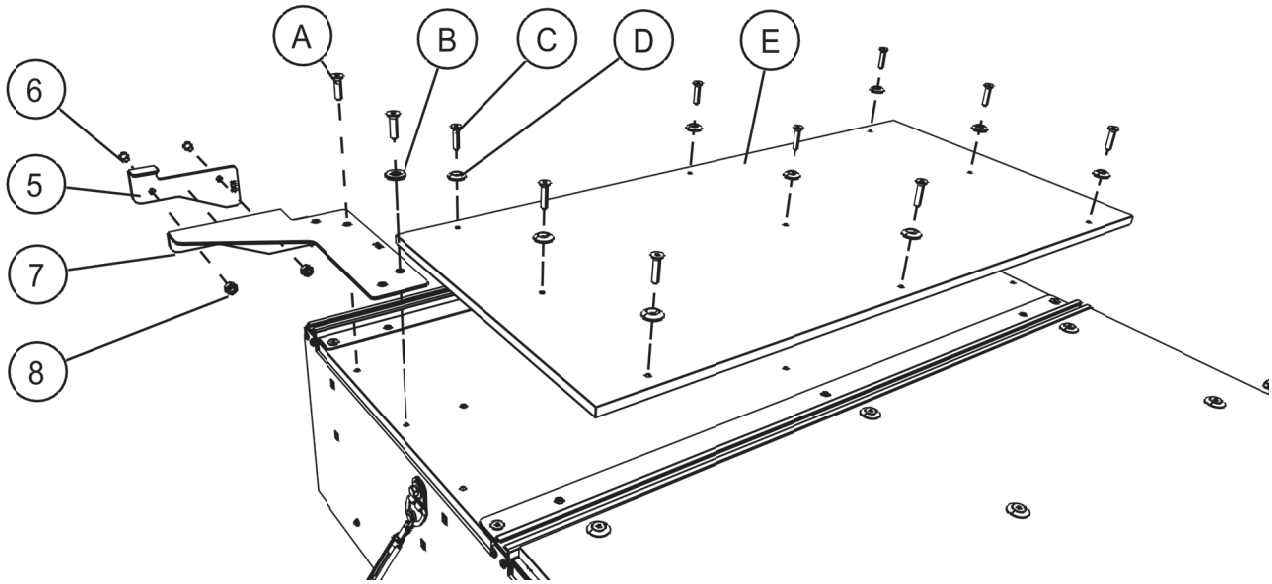

(B) **Remove the D-Rings (Item G) and assemble and fasten Front Brackets (Items 9,10,11,12,13 & 7) as shown. Adjust and Fasten the adjustable bracket as per Step3c. Fasten the Front Face (Item 17) as shown with (Items 14,15 & 16). Once done fit the Side Decks.**

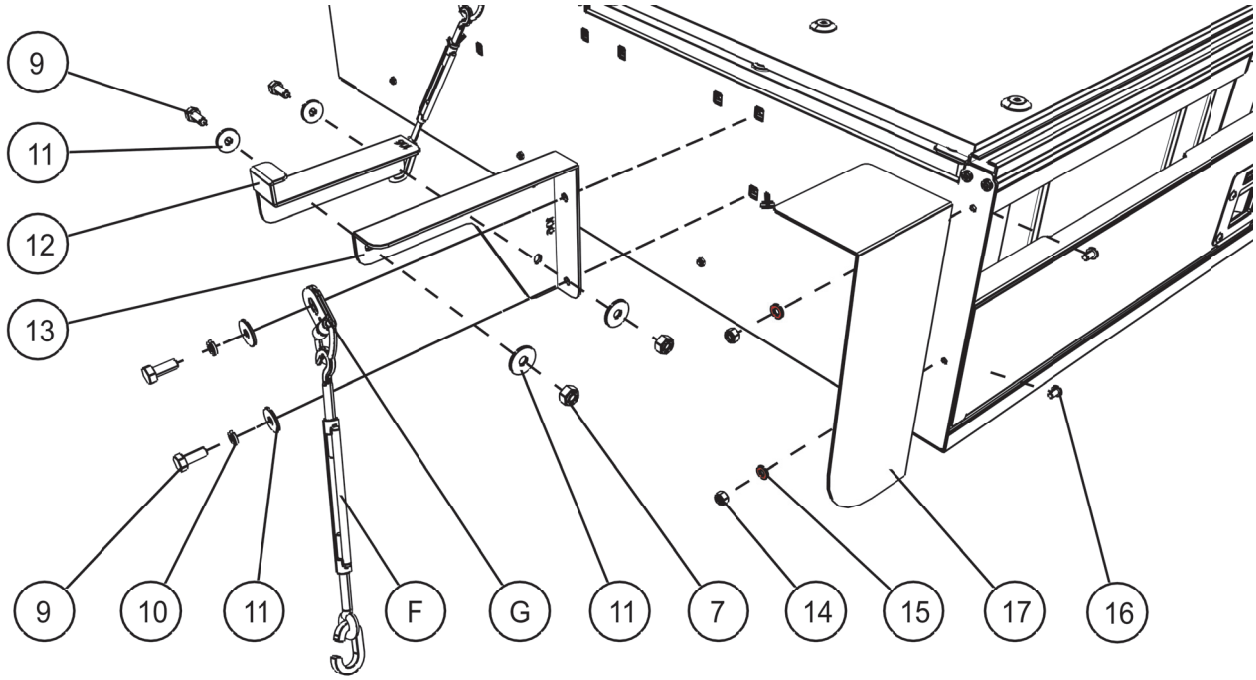

© COPYRIGHT 2016 FRONT RUNNER VEHICLE OUTFITTERS

3 SSDR005 DECK COMPLETION SET INSTALLATION

(A) **With SSDR005 placed in the vehicle. Remove the Rear Carpeted Deck by unscrewing the nine Counter Sunk Screws (Item A). Assemble (Items 6, 5, 7 & 8) and fasten Brackets as shown. Repeat for right hand side.**

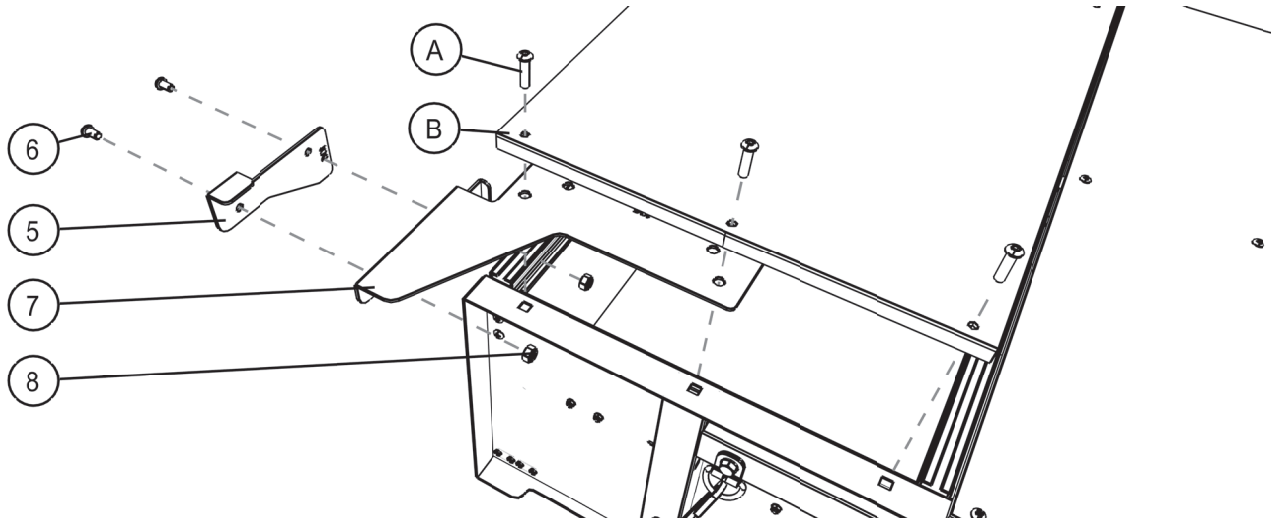

(B) **Assemble (Items 9,11,12,13 & 7) and Fasten the Front Brackets as shown with (Items 11,10 & 9).**

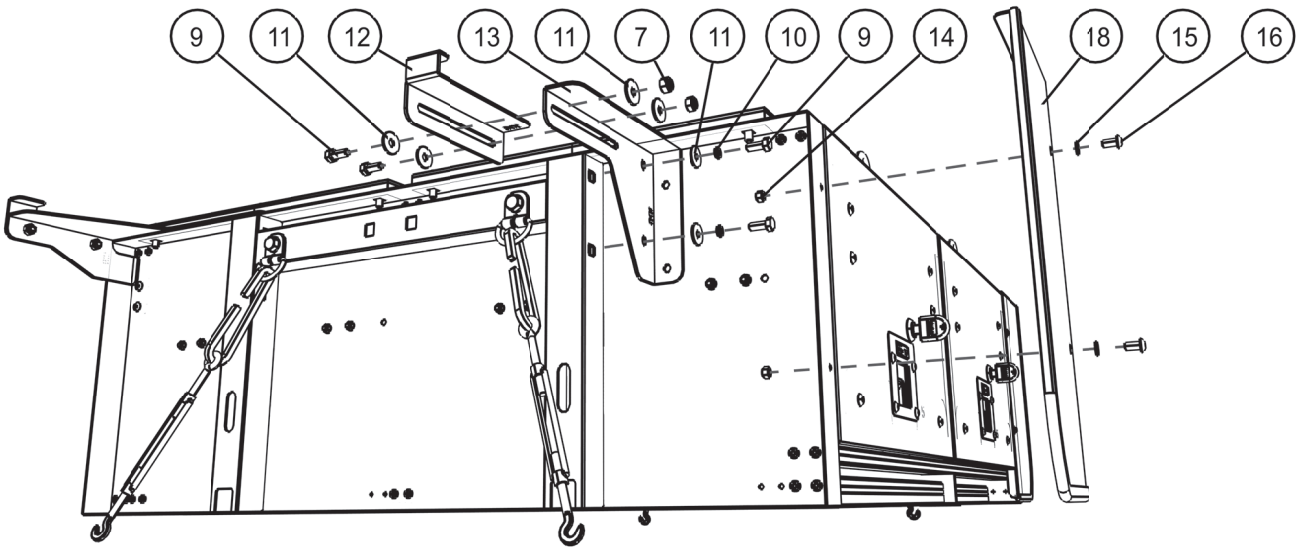

(C) **Before fastening the Front Faces (Item 17 or 18) and with the Side Decks in position. Push the Adjustable bracket against the Deck so that it grabs the Side Deck snugly. Fasten (Items 9 & 7). With the Side Deck in place and drawer system positioned, secure with Turnbuckles as shown in your drawer systems fitting instruction (SSAM014 or SSDR005).**

Now fasten front face.

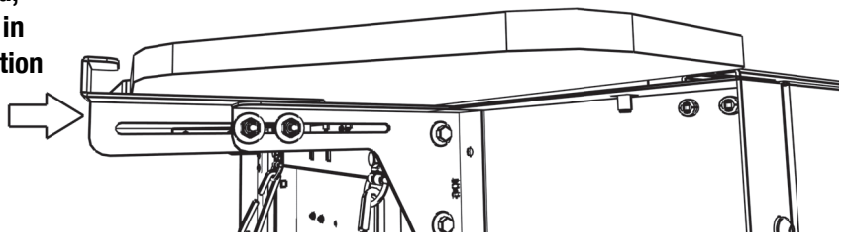

© COPYRIGHT 2016 FRONT RUNNER VEHICLE OUTFITTERS