FRONT RUNNER
VEHICLE OUTFITTERS

TOYOTA LAND CRUISER 100 SERIES

DRAWER DECK COMPLETION SET

ENG

SSDS105

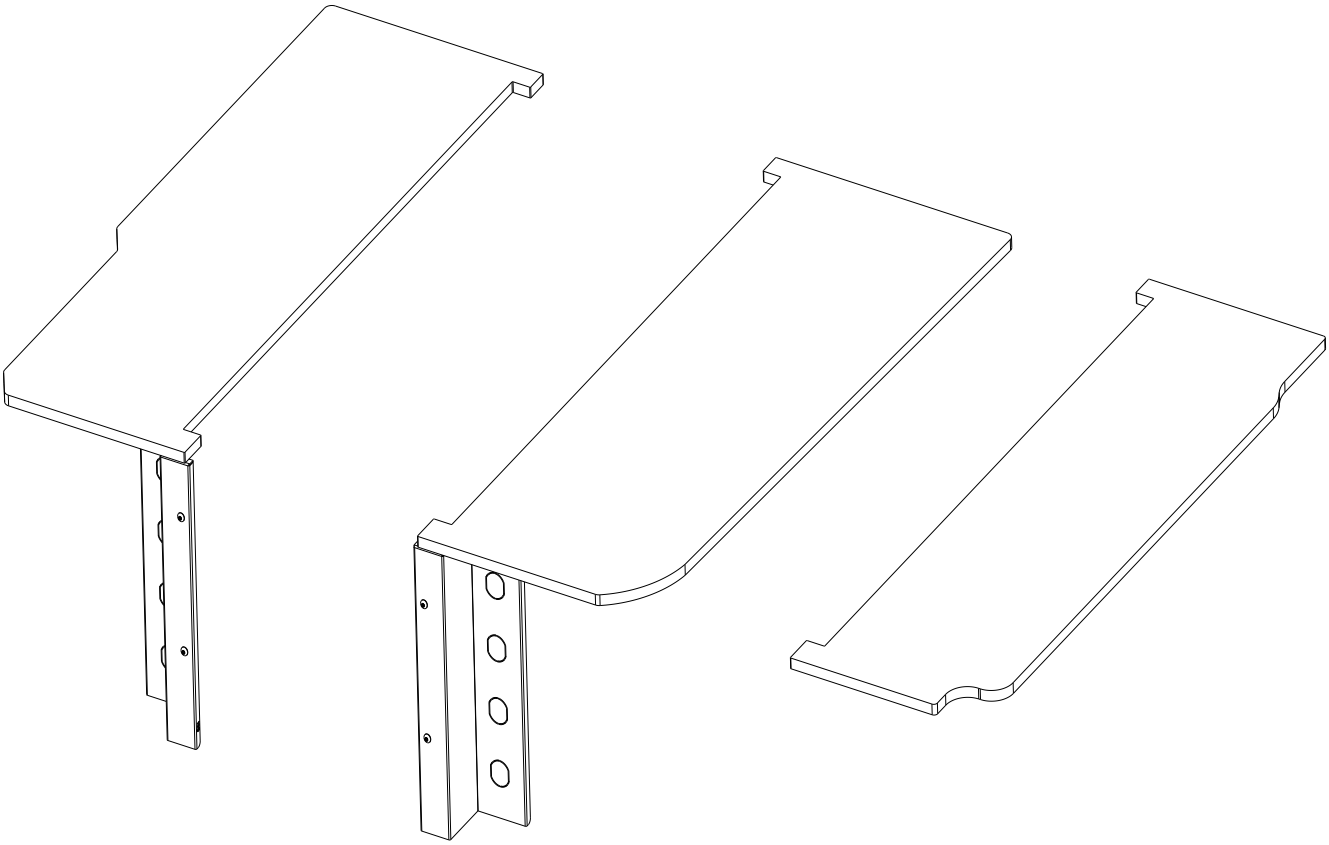

READ ME !

Thank you for purchasing a Front Runner Deck Completion Set.

Before you start, take a moment to familiarize yourself with this Fitting Instruction and the components received.

Refer to Page 2 for a list of all the components, quantities and tools required.

IMPORTANT WARNING!

IT IS CRITICAL THAT ALL FRONT RUNNER PRODUCTS BE PROPERLY AND SECURELY ASSEMBLED AND ATTACHED TO YOUR VEHICLE. IMPROPER ATTACHMENT COULD RESULT IN AN AUTOMOBILE ACCIDENT, AND COULD CAUSE SERIOUS BODILY INJURY OR DEATH. YOU ARE RESPONSIBLE FOR ASSEMBLING AND SECURING ALL FRONT RUNNER PRODUCTS TO YOUR VEHICLE, CHECKING THE ATTACHMENTS PRIOR TO USE, AND PERIODICALLY INSPECTING THE PRODUCTS FOR ADJUSTMENT, WEAR AND DAMAGE. THEREFORE, YOU MUST READ AND UNDERSTAND ALL OF THE INSTRUCTIONS AND PRECAUTIONS SUPPLIED WITH YOUR FRONT RUNNER PRODUCT PRIOR TO INSTALLATION OR USE. IF YOU DO NOT UNDERSTAND ALL OF THE INSTRUCTIONS AND CAUTIONS, OR IF YOU HAVE NO MECHANICAL EXPERIENCE AND ARE NOT THOROUGHLY FAMILIAR WITH THE INSTALLATION PROCEDURES, YOU SHOULD HAVE THE PRODUCT INSTALLED BY A PROFESSIONAL INSTALLER OR OTHER QUALIFIED PERSONNEL.

NOTE: Front Runner will not be responsible for any damage caused by the failure to install the product according to these instructions.
Please call us if you have any questions about the installation of this product.

© 2019 FRONT RUNNER VEHICLE OUTFITTERS

1 GET ORGANIZED

Here is what you are looking at for SSDS105

IN THE BOX

1	1 X	Side Deck LH
2	1 X	Side Deck RH 1
3	1 X	Side Deck RH 2
4	2 X	Front Face 1LH + 1RH With Knockouts
5	2 X	115mm Carabiner Hook
6	4 X	Nyloc Nut M5
7	4 X	Flat Washer M5
8	4 X	Button Head M5x12
9	2 X	M6 x 20 Hex Bolt
10	2 X	Front Face 1LH + 1RH
11	2 X	Pinch Weld

TOOLS NEEDED

FIGURE 1.1

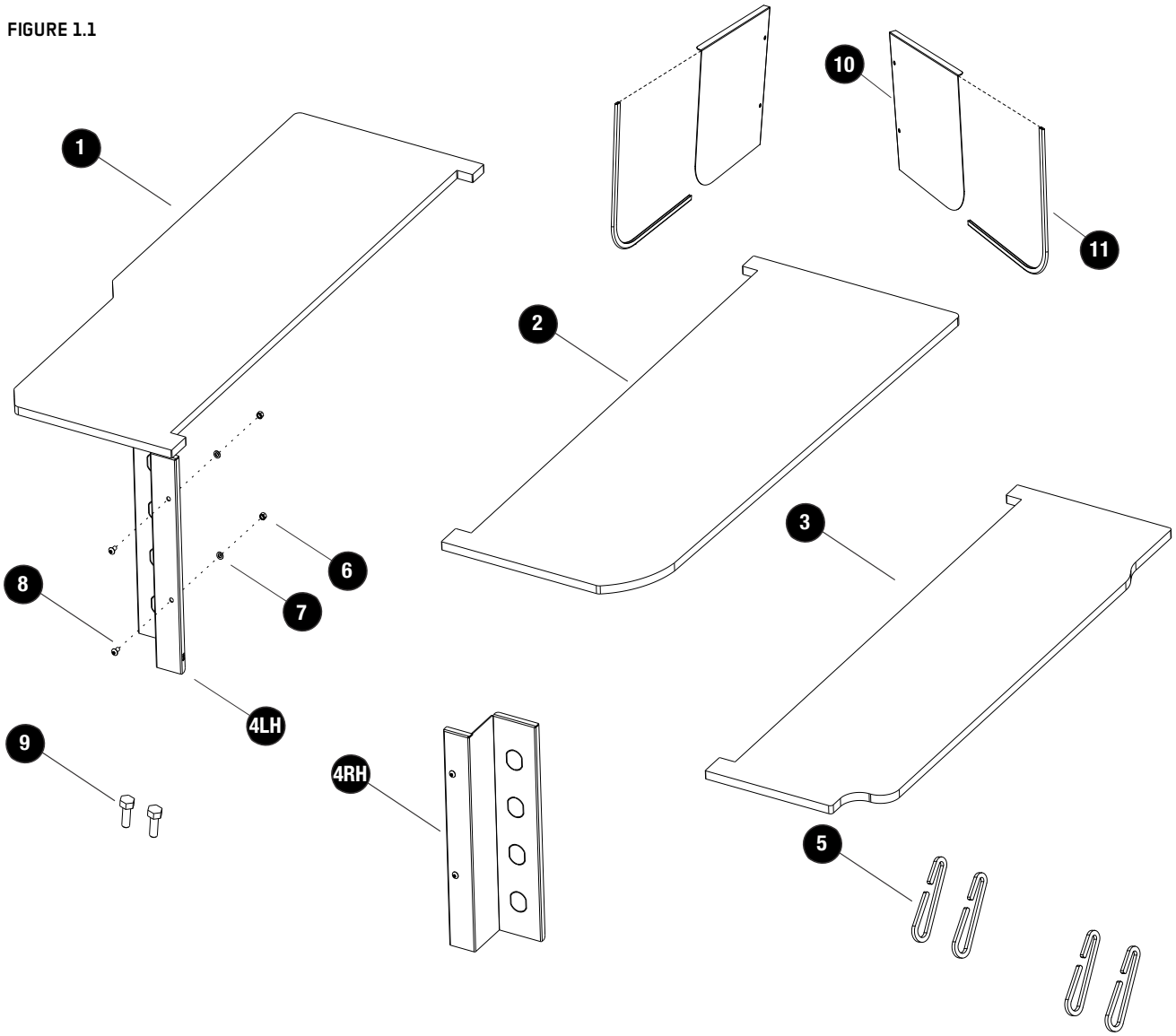

 © 2019 FRONT RUNNER VEHICLE OUTFITTERS

2 FIT AND SECURE

2.1

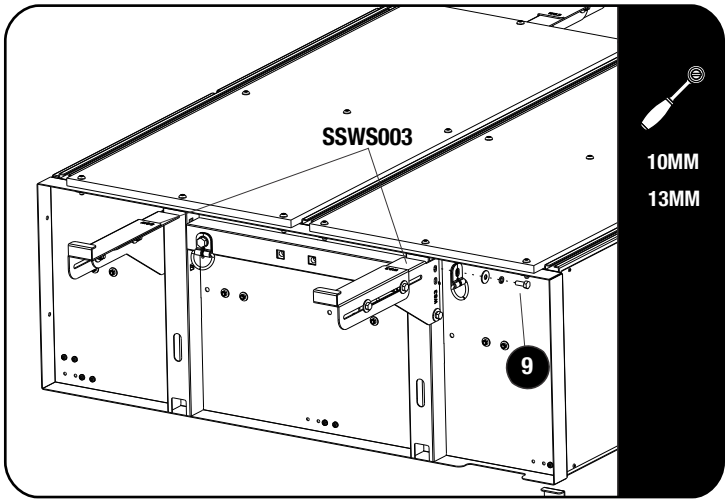

Assemble and fit the Wing Set (SSWS003) to the drawer. Refer to SSWS003's fitting Instruction for assembly.

You will also need to reposition the D-ring on the rear of the drawer as shown in 2.1.

Use a M6 x 20 Hex Bolt (Item 9) to secure the D-Ring to the Drawer

2.2

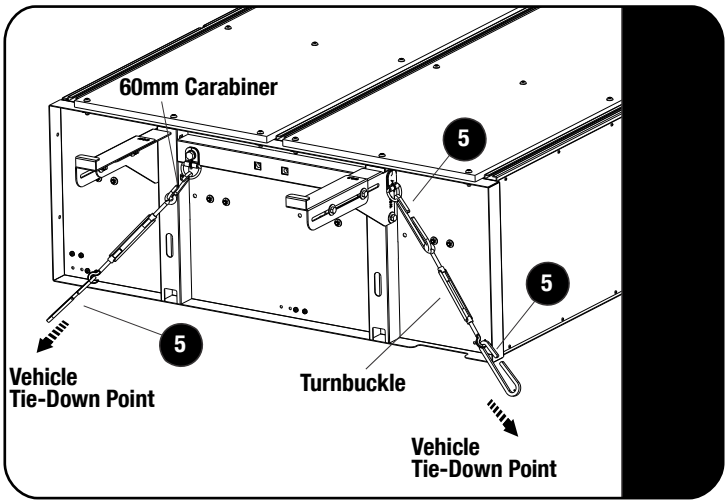

Use the LH and RH Side Decks as guides to ensure the drawer position correctly.

Secure the drawer to the vehicle tie-down points using the 115mm Carabiner Hooks (Item 5) supplied with SSDS105 and the Turnbuckles and 60mm Carabiner hooks supplied with SSDR005.

To access the tie-down points at the front of the drawer you will need to lift the carpet. Make a small cut in the carpet to get access to the tie-down. Do this on both sides of the drawer.

2.3

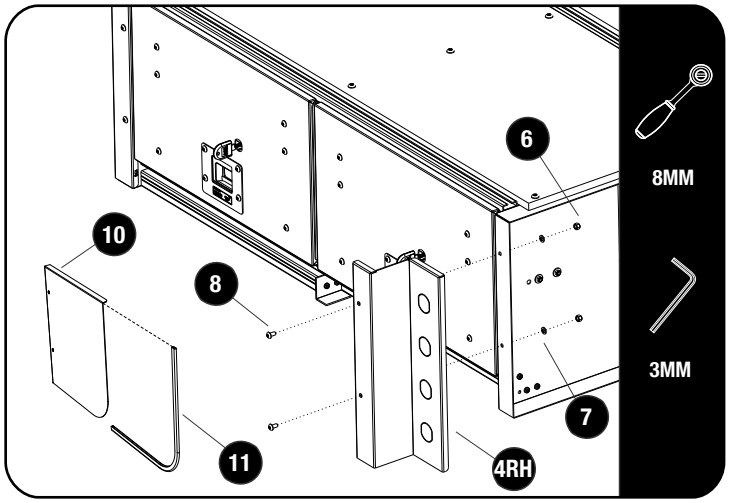

Secure the Front Faces (Item 4 or 10) to the drawer using M5 x 12 Button Heads, M5 Flat Washers and M5 Nyloc Nuts (Items 6, 7 & 8) as shown.

© 92019 FRONT RUNNER VEHICLE OUTFITTERS

2 FIT AND SECURE

2.4

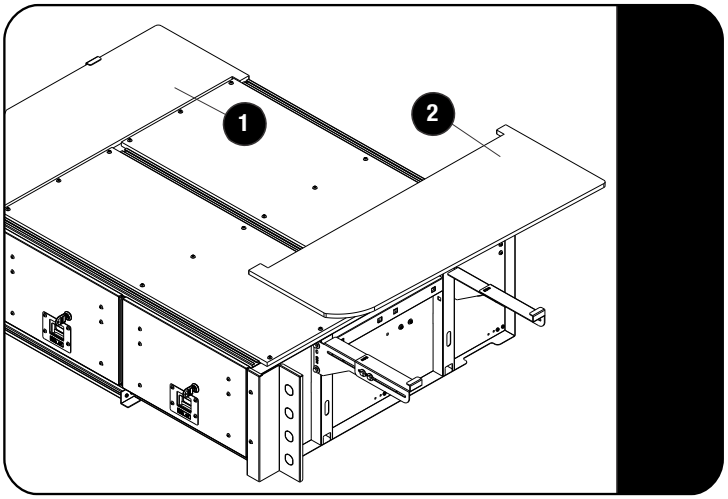

Fit the LH and RH Side Decks (Items 1,2 or 3) to the drawer by placing them into the C-Clips and pushing down on the drawer side.

Choose the correct RH Side Deck according to your vehicle.

3 FITTING ELECTRICAL SOCKETS

3.1

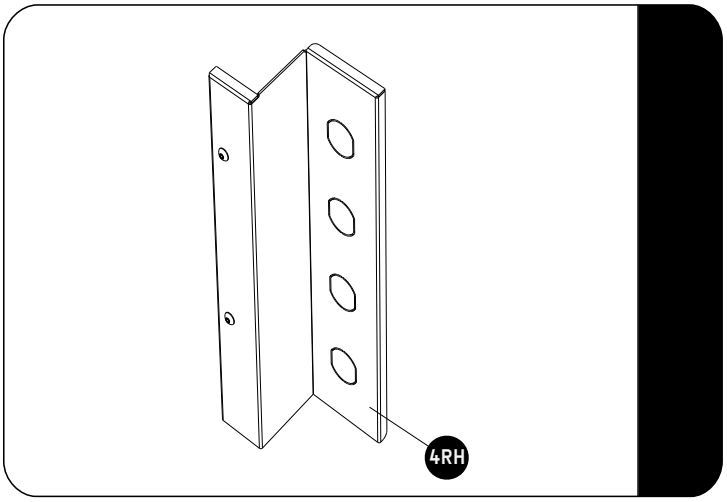

Twist the pre cut knock outs to remove. These cut outs can then be used to fit Front Runners range of electrical sockets. (Sold Separately)

ECOM117 - Amp
ECOM118 - USB
ECOM119 - 12/24V
ECOM120 - Merit
ECOM121 - Engel
ECOM124 - Volt

© 2019 FRONT RUNNER VEHICLE OUTFITTERS

4 COMPLETION

Congratulations! You did it. Take a step back and admire your work!

5 INSTALL OTHER VEHICLE AND RACK ACCESSORIES

Now's the time to visit your favorite Front Runner Dealer in person or online.

Be sure to tag us. We love to see our gear in action! #FrontRunnerOutfitters #BornToRoam

Share your adventures on:

© 2019 FRONT RUNNER VEHICLE OUTFITTERS