FRONT RUNNER
VEHICLE OUTFITTERS

DECK COMPLETION SET

TOYOTA LAND CRUISER 200 SERIES

ENG

SSDS103

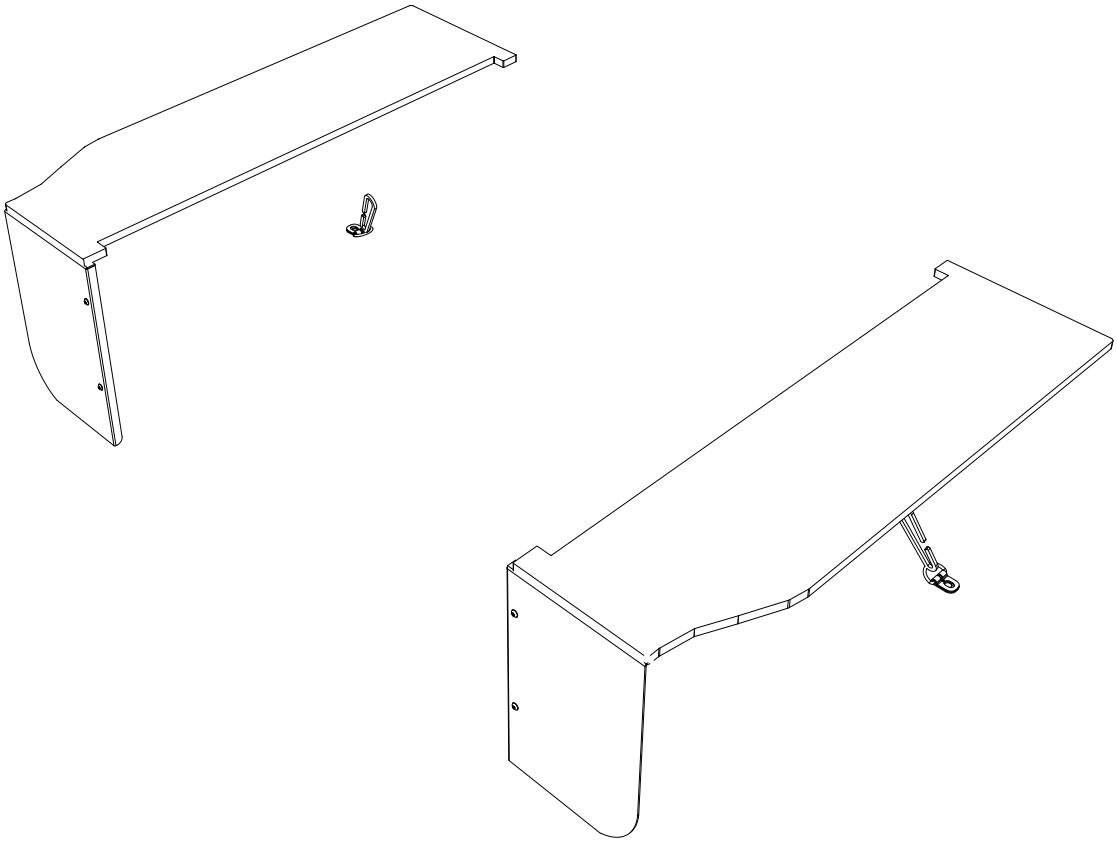

READ ME !

Thank you for purchasing a Front Runner Deck Completion Set.

Before you start, take a moment to familiarize yourself with the Fitting Instructions and the components received.

Refer to Page 2 for a list of all the components, quantities and tools required.

IMPORTANT WARNING!

IT IS CRITICAL THAT ALL FRONT RUNNER PRODUCTS BE PROPERLY AND SECURELY ASSEMBLED AND ATTACHED TO YOUR VEHICLE. IMPROPER ATTACHMENT COULD RESULT IN AN AUTOMOBILE ACCIDENT, AND COULD CAUSE SERIOUS BODILY INJURY OR DEATH. YOU ARE RESPONSIBLE FOR ASSEMBLING AND SECURING ALL FRONT RUNNER PRODUCTS TO YOUR VEHICLE, CHECKING THE ATTACHMENTS PRIOR TO USE, AND PERIODICALLY INSPECTING THE PRODUCTS FOR ADJUSTMENT, WEAR AND DAMAGE. THEREFORE, YOU MUST READ AND UNDERSTAND ALL OF THE INSTRUCTIONS AND PRECAUTIONS SUPPLIED WITH YOUR FRONT RUNNER PRODUCT PRIOR TO INSTALLATION OR USE. IF YOU DO NOT UNDERSTAND ALL OF THE INSTRUCTIONS AND CAUTIONS, OR IF YOU HAVE NO MECHANICAL EXPERIENCE AND ARE NOT THOROUGHLY FAMILIAR WITH THE INSTALLATION PROCEDURES, YOU SHOULD HAVE THE PRODUCT INSTALLED BY A PROFESSIONAL INSTALLER OR OTHER QUALIFIED PERSONNEL.

NOTE: Front Runner will not be responsible for any damage caused by the failure to install the product according to these instructions.

Please call us if you have any questions about the installation of this product.

© 2021 FRONT RUNNER VEHICLE OUTFITTERS

1 GET ORGANIZED

IN THE BOX

1	2 X	Side Deck - 1 Left + 1 Right
2	2 X	Large C-Hook
3	2 X	M10 D-RIng
4	4 X	M5 Nyloc Nut
5	2 X	M5 Flat Washer
6	2 X	Front Face - 1 Left + 1 Right
7	2 X	M5 x 12 Button Head Bolt
8	2 X	Front Face 1LH + 1RH With Knockouts

TOOLS NEEDED

8MM
10MM
12MM
13MM

8MM
10MM
12MM
13MM

3MM

FIGURE 1.1

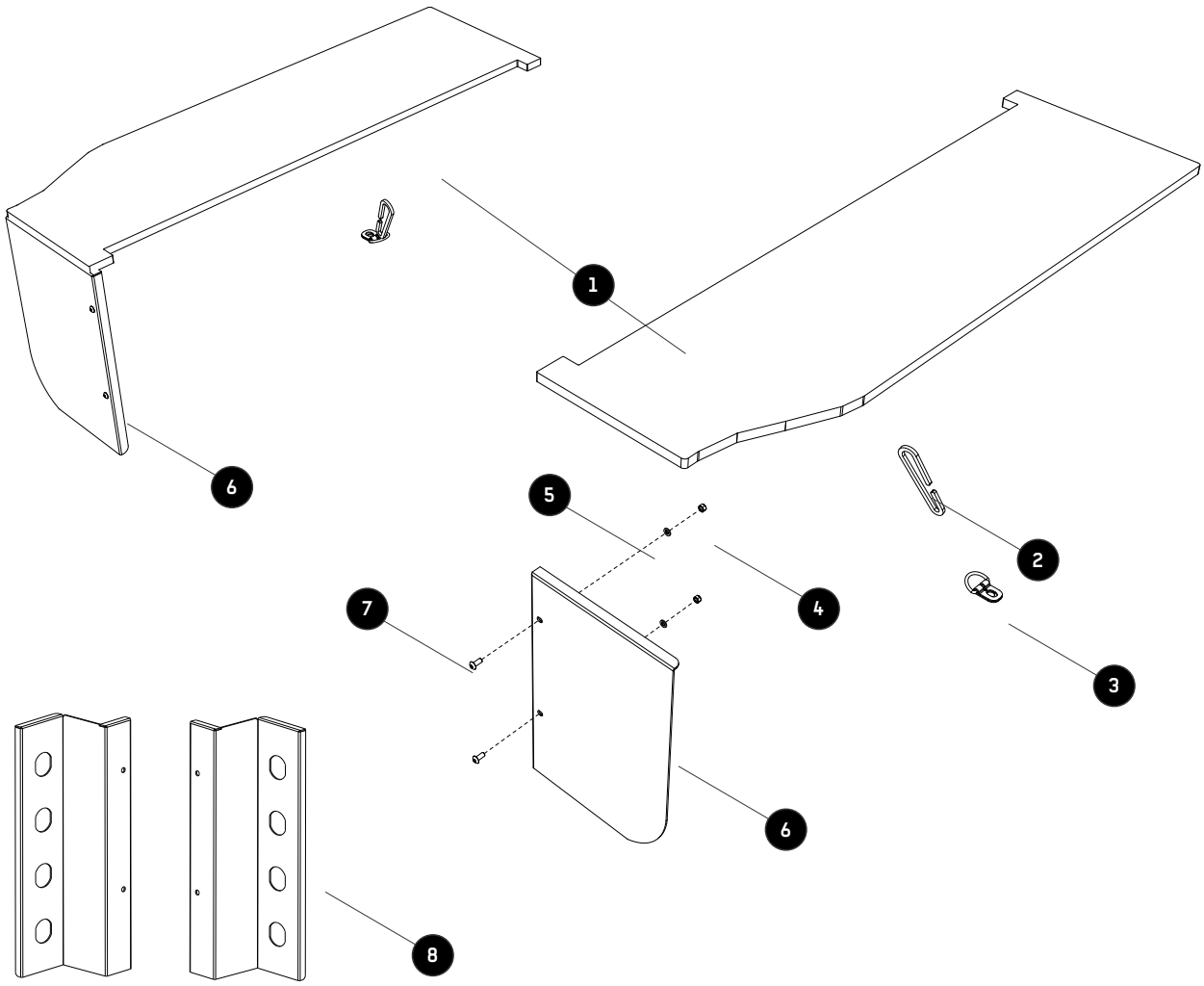

 © 2021 FRONT RUNNER VEHICLE OUTFITTERS

2 FIT AND SECURE

2.1

If you have chosen to remove the seats, refer to the left hand side of the image. Remove the four bolts securing each seat as shown to remove the seats from the vehicle. Secure the D-Rings (Item 3) to the vehicle using the original bolts.

If you have chosen to leave the seats in the vehicle, refer to the right hand side of the image. Remove the bolts indicated by item 3 and secure the D-Rings to the vehicle using the bolts just removed.

2.2

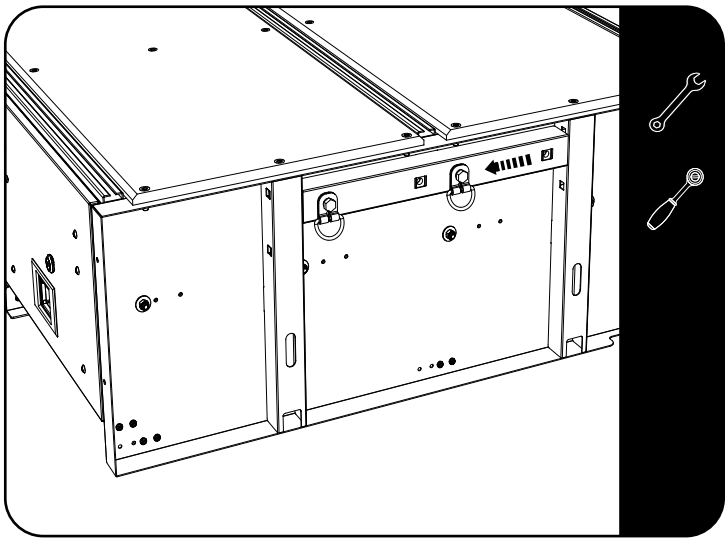

Loosen the D-Rings that comes assembled to the drawer. Reposition the D-Rings to the drawer as shown.

2.3

Place the drawer system into the vehicle, lining up the front of the drawer with the edge of the plastic trim as shown. Center the drawer left to right.

 © 2021 FRONT RUNNER VEHICLE OUTFITTERS

2 PREPARATION

2.4

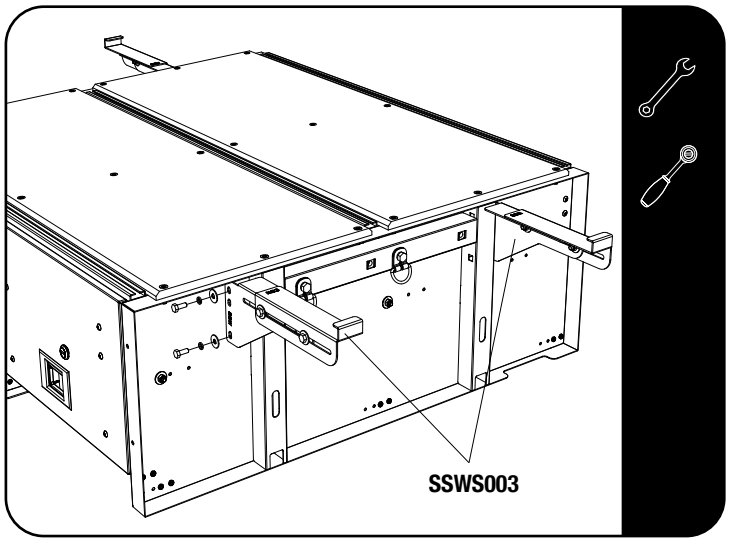

Refer to the fitting instruction of SSWS003 to secure the wing set.

2.5

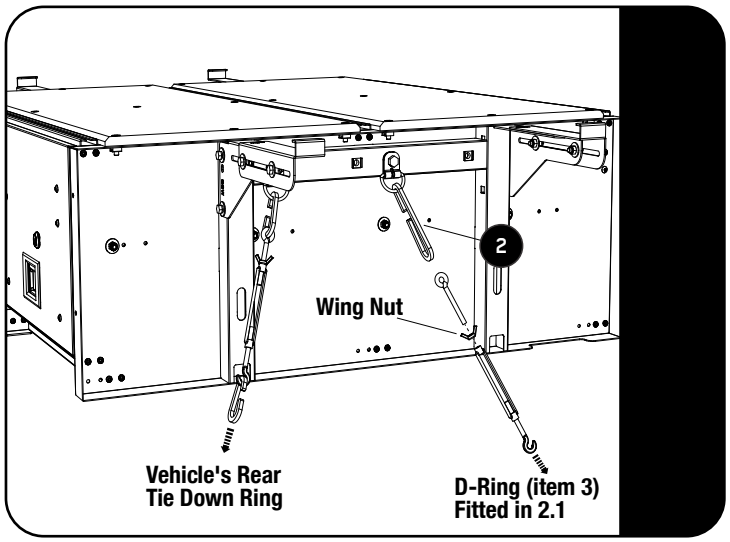

Loosely secure the front of the drawer to the vehicle's rear tie down rings using 4 c-hooks and 2 turnbuckles as shown. (Supplied with the drawer system)

Loosely secure the rear of the drawer to the vehicle, using 2 large c-hooks and 2 turnbuckles.

Tighten all the turnbuckles making sure that the drawer system remains centered. Tighten the Wing nuts.

Ensure that the wing nuts are at the top as shown (Wing nuts are supplied with the drawer system)

2.6

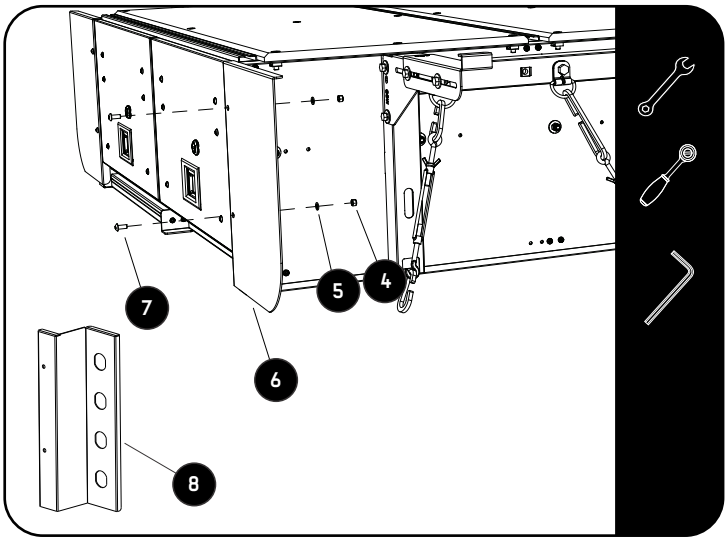

If you have removed the seats to install the drawer, assemble the front faces (Item 6 or 8) to the left and right side of the drawer using item 4, 5 and 7.

Fit the side decks (Item 1) to the drawer. Refer to 1.1

 © 2021 FRONT RUNNER VEHICLE OUTFITTERS

3 FITTING ELECTRICAL SOCKETS

3.1

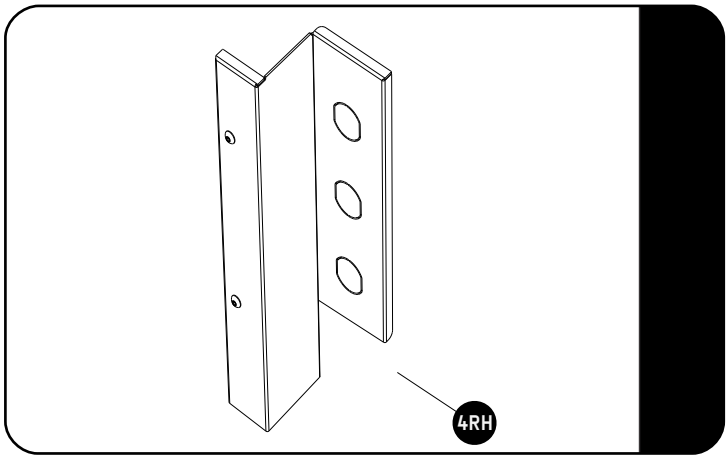

Twist the pre cut knock outs to remove. These cut outs can then be used to fit Front Runners range of electrical sockets. (Sold Separately)

ECOM117 - Amp
ECOM118 - USB
ECOM119 - 12/24V
ECOM120 - Merit
ECOM121 - Engel
ECOM124 - Volt

4 COMPLETION

Congratulations! You did it. Take a step back and admire your work!

5 INSTALL OTHER VEHICLE AND RACK ACCESSORIES

Now's the time to visit your favorite Front Runner Dealer in person or online.

Be sure to tag us. We love to see our gear in action! #FrontRunnerOutfitters #BornToRoam

Share your adventures on:

© 2021 FRONT RUNNER VEHICLE OUTFITTERS