FRONT RUNNER
VEHICLE OUTFITTERS

DRAWER PICK-UP MEDIUM

ENG

SSDR012

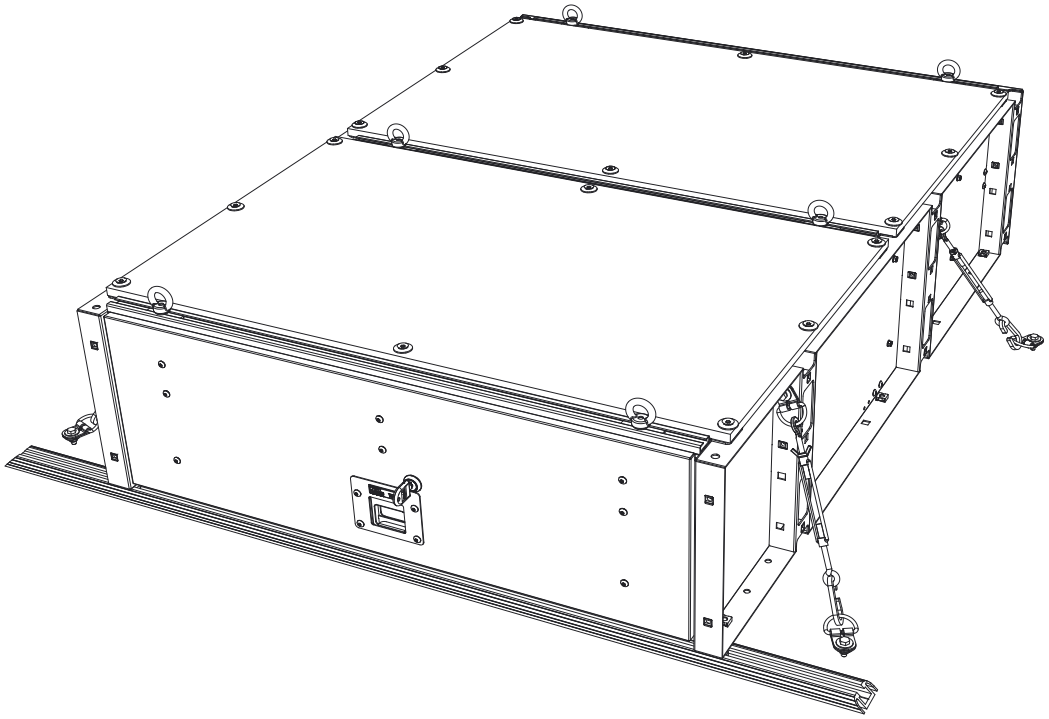

READ ME !

Thank you for purchasing Front Runner Drawer.

Before you start, take a moment to familiarize yourself with the Fitting Instructions and the components received.

Refer to Page 2 for a list of all the components, quantities and tools required.

IMPORTANT WARNING!

IT IS CRITICAL THAT ALL FRONT RUNNER PRODUCTS BE PROPERLY AND SECURELY ASSEMBLED AND ATTACHED TO YOUR VEHICLE. IMPROPER ATTACHMENT COULD RESULT IN AN AUTOMOBILE ACCIDENT, AND COULD CAUSE SERIOUS BODILY INJURY OR DEATH. YOU ARE RESPONSIBLE FOR ASSEMBLING AND SECURING ALL FRONT RUNNER PRODUCTS TO YOUR VEHICLE, CHECKING THE ATTACHMENTS PRIOR TO USE, AND PERIODICALLY INSPECTING THE PRODUCTS FOR ADJUSTMENT, WEAR AND DAMAGE. THEREFORE, YOU MUST READ AND UNDERSTAND ALL OF THE INSTRUCTIONS AND PRECAUTIONS SUPPLIED WITH YOUR FRONT RUNNER PRODUCT PRIOR TO INSTALLATION OR USE. IF YOU DO NOT UNDERSTAND ALL OF THE INSTRUCTIONS AND CAUTIONS, OR IF YOU HAVE NO MECHANICAL EXPERIENCE AND ARE NOT THOROUGHLY FAMILIAR WITH THE INSTALLATION PROCEDURES, YOU SHOULD HAVE THE PRODUCT INSTALLED BY A PROFESSIONAL INSTALLER OR OTHER QUALIFIED PERSONNEL.

NOTE: Front Runner will not be responsible for any damage caused by the failure to install the product according to these instructions.

Please call us if you have any questions about the installation of this product.

© 2020 FRONT RUNNER VEHICLE OUTFITTERS

1 GET ORGANIZED

IN THE BOX

1	1 X	Drawer
2	6 X	M6 Stud Plate
3	6 X	M8 Nylon Washer
4	6 X	M6 Eye Nut
5	8 X	M6x20 Hex Bolt
6	4 X	M6 Spring Washer
7	12 X	M6x19x1 Flat Washer
8	8 X	D-Ring
9	1 X	Track
10	2 X	M8x16 Hex Bolt
11	2 X	M8 Spring Washer
12	2 X	M8 Flat Washer
13	2 X	M8 Channel Nut
14	4 X	60mm C-Hook
15	4 X	M6 Wing Nut
16	4 X	Turnbuckle
17	4 X	M6 Nyloc Nut

IN THE BOX

18	9 X	M6 x 30 Countersink Screws
19	9 X	M6 Finishing Washers

TOOLS NEEDED

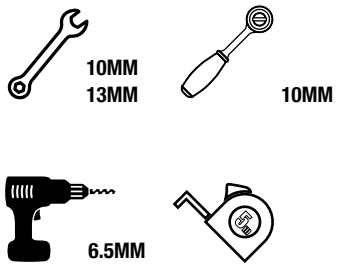

FIGURE 1.1

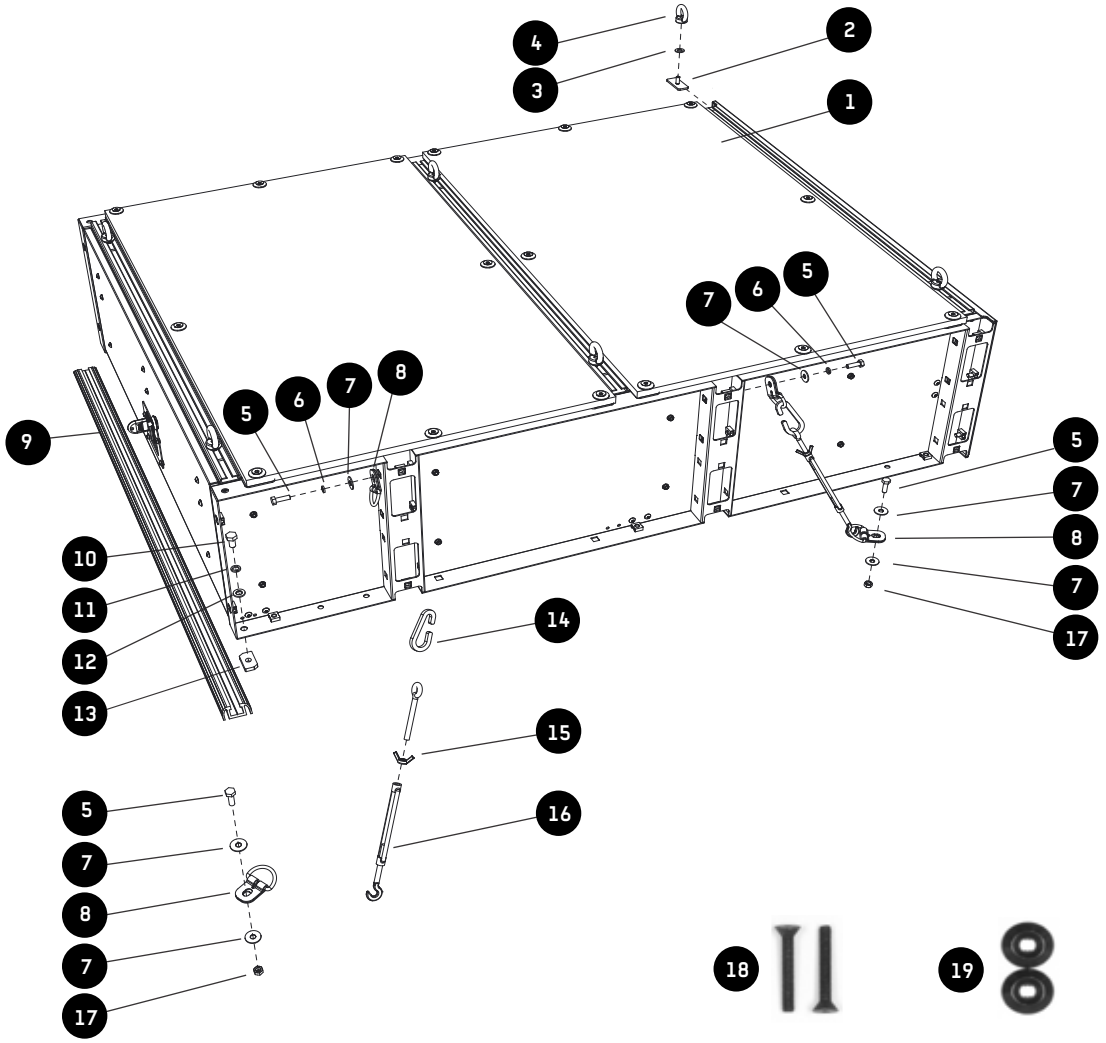

 © 2020 FRONT RUNNER VEHICLE OUTFITTERS

2 FIT AND SECURE

2.1

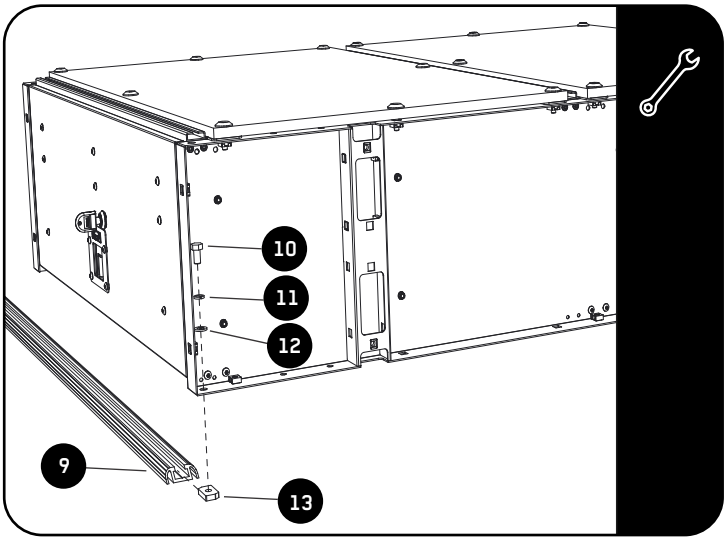

Slide 2 channel nuts into the track. Center the track under the drawer and secure with the fasteners that are shown.

2.2

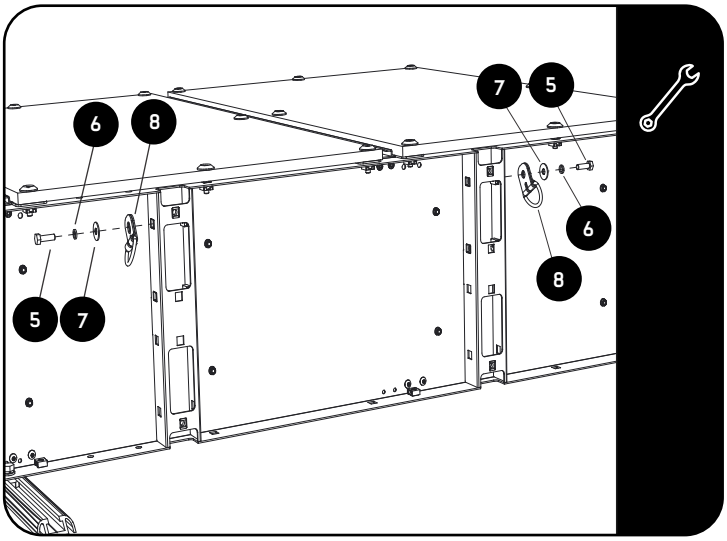

Secure the 4 D-Rings on both sides of the drawer as shown.

2.3

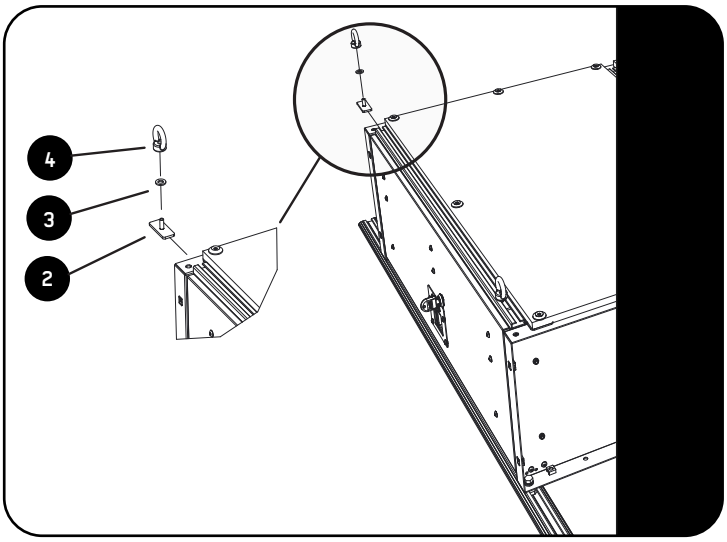

Assemble the 6 eye-nuts and slide into place.

© 2020 FRONT RUNNER VEHICLE OUTFITTERS

2 FIT AND SECURE

2.4

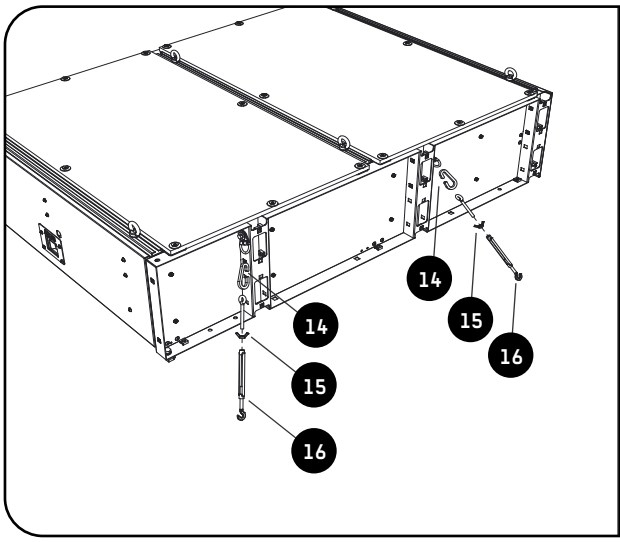

Assemble each of the 4 turnbuckles with item 15 as shown. Item 15 will be used to lock the turnbuckles after they have been set.

2.5

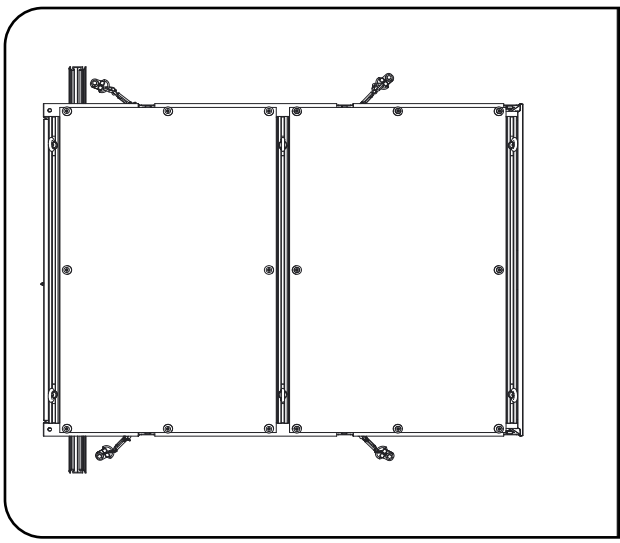

Place the drawer into the vehicle and position as desired. Making sure the turnbuckles are pulling outward to prevent the drawer from moving after it has been secured. Mark and drill 6.5mm holes using the D-rings as a guide.

2.6

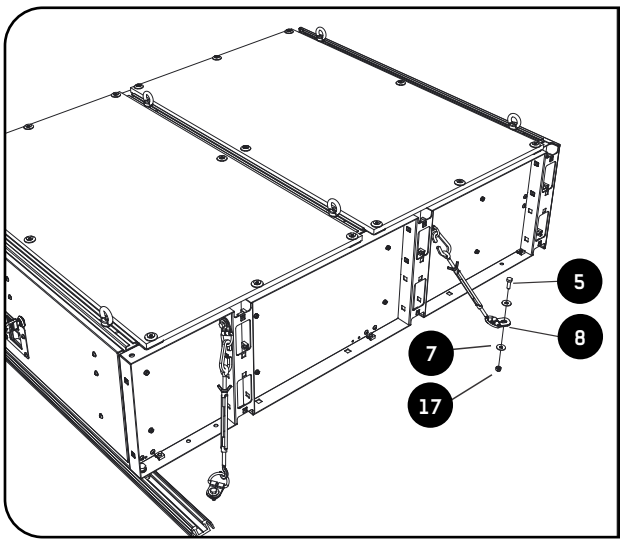

Use the fasteners that are shown to secure the drawer to the vehicle.

© 2020 FRONT RUNNER VEHICLE OUTFITTERS

3

FINISH

Congratulations! You did it. Take a step back and admire your work!

4

INSTALL OTHER VEHICLE AND RACK ACCESSORIES

Now's the time to visit your favorite Front Runner Dealer in person or online.

Be sure to tag us. We love to see our gear in action! #FrontRunnerOutfitters #BornToRoam

Share your adventures on:

© 2020 FRONT RUNNER VEHICLE OUTFITTERS