FRONT RUNNER
VEHICLE OUTFITTERS

UNIVERSAL DRAWER LARGE PICK-UP

ENG

SSDR010

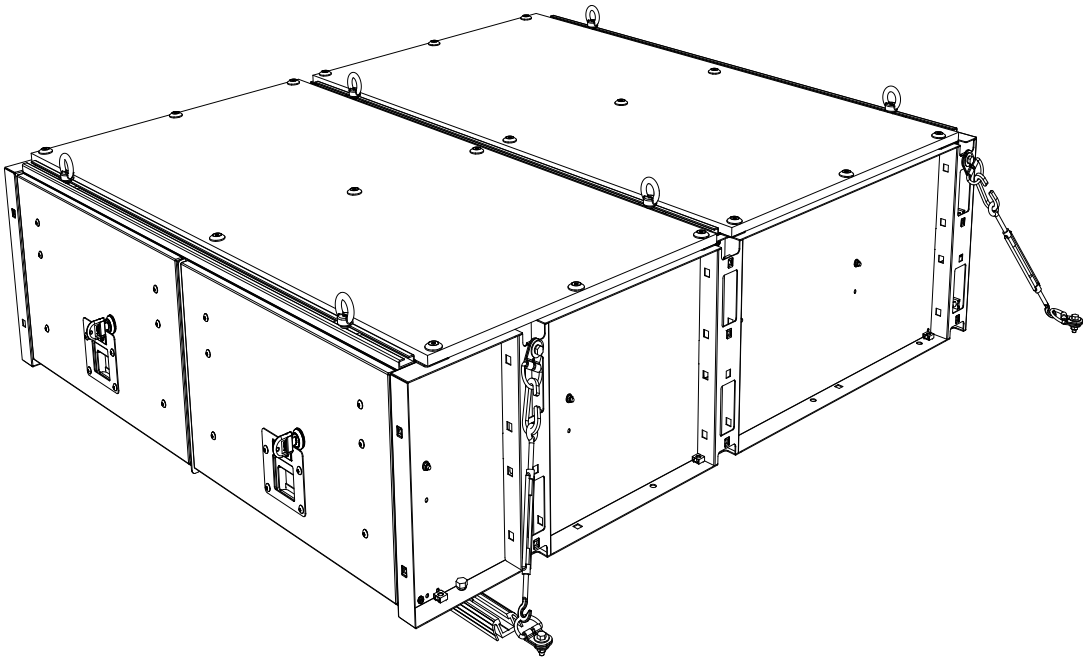

READ ME !

Thank you for purchasing Front Runner Universal Drawer System.

Before you start, take a moment to familiarize yourself with the Fitting Instructions and the components received.

Refer to Page 2 for a list of all the components, quantities and tools required.

IMPORTANT WARNING!

IT IS CRITICAL THAT ALL FRONT RUNNER PRODUCTS BE PROPERLY AND SECURELY ASSEMBLED AND ATTACHED TO YOUR VEHICLE. IMPROPER ATTACHMENT COULD RESULT IN AN AUTOMOBILE ACCIDENT, AND COULD CAUSE SERIOUS BODILY INJURY OR DEATH. YOU ARE RESPONSIBLE FOR ASSEMBLING AND SECURING ALL FRONT RUNNER PRODUCTS TO YOUR VEHICLE, CHECKING THE ATTACHMENTS PRIOR TO USE, AND PERIODICALLY INSPECTING THE PRODUCTS FOR ADJUSTMENT, WEAR AND DAMAGE. THEREFORE, YOU MUST READ AND UNDERSTAND ALL OF THE INSTRUCTIONS AND PRECAUTIONS SUPPLIED WITH YOUR FRONT RUNNER PRODUCT PRIOR TO INSTALLATION OR USE. IF YOU DO NOT UNDERSTAND ALL OF THE INSTRUCTIONS AND CAUTIONS, OR IF YOU HAVE NO MECHANICAL EXPERIENCE AND ARE NOT THOROUGHLY FAMILIAR WITH THE INSTALLATION PROCEDURES, YOU SHOULD HAVE THE PRODUCT INSTALLED BY A PROFESSIONAL INSTALLER OR OTHER QUALIFIED PERSONNEL.

NOTE: Front Runner will not be responsible for any damage caused by the failure to install the product according to these instructions.

Please call us if you have any questions about the installation of this product.

© 2020 FRONT RUNNER VEHICLE OUTFITTERS

1 GET ORGANIZED

IN THE BOX

1	1 X	Drawer
	2 X	Set Of Keys
2	6 X	Eye Nut
3	6 X	M8 Nylon Washer
4	6 X	Stud Plate
5	1 X	Track
6	2 X	M8x16 Hex Bolt
7	2 X	M8 Spring Washer
8	2 X	M8x25 Flat Washer
9	2 X	M8 Channel Nut
10	12 X	M6x19x1ss Flat Washer
11	4 X	M6 Spring Washer
12	4 X	M6x20 Hex Bolt
13	4 X	M6x30 Hex Bolt
14	8 X	M8 D-Ring
15	4 X	M6 Nyloc Nut
16	4 X	60mm Carabiner
17	4 X	M6 Wing Nut
18	4 X	Turnbuckle
19	4 X	M6 Riv Nut

IN THE BOX

20	9 X	Finishing Washer
21	6 X	M6 Cage Nuts
22	6 X	M6 x 35 Countersink Screw
23	9 X	M6 x 40 Countersink Screw

TOOLS NEEDED

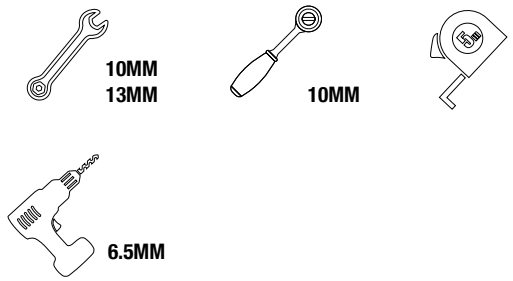

FIGURE 1.1

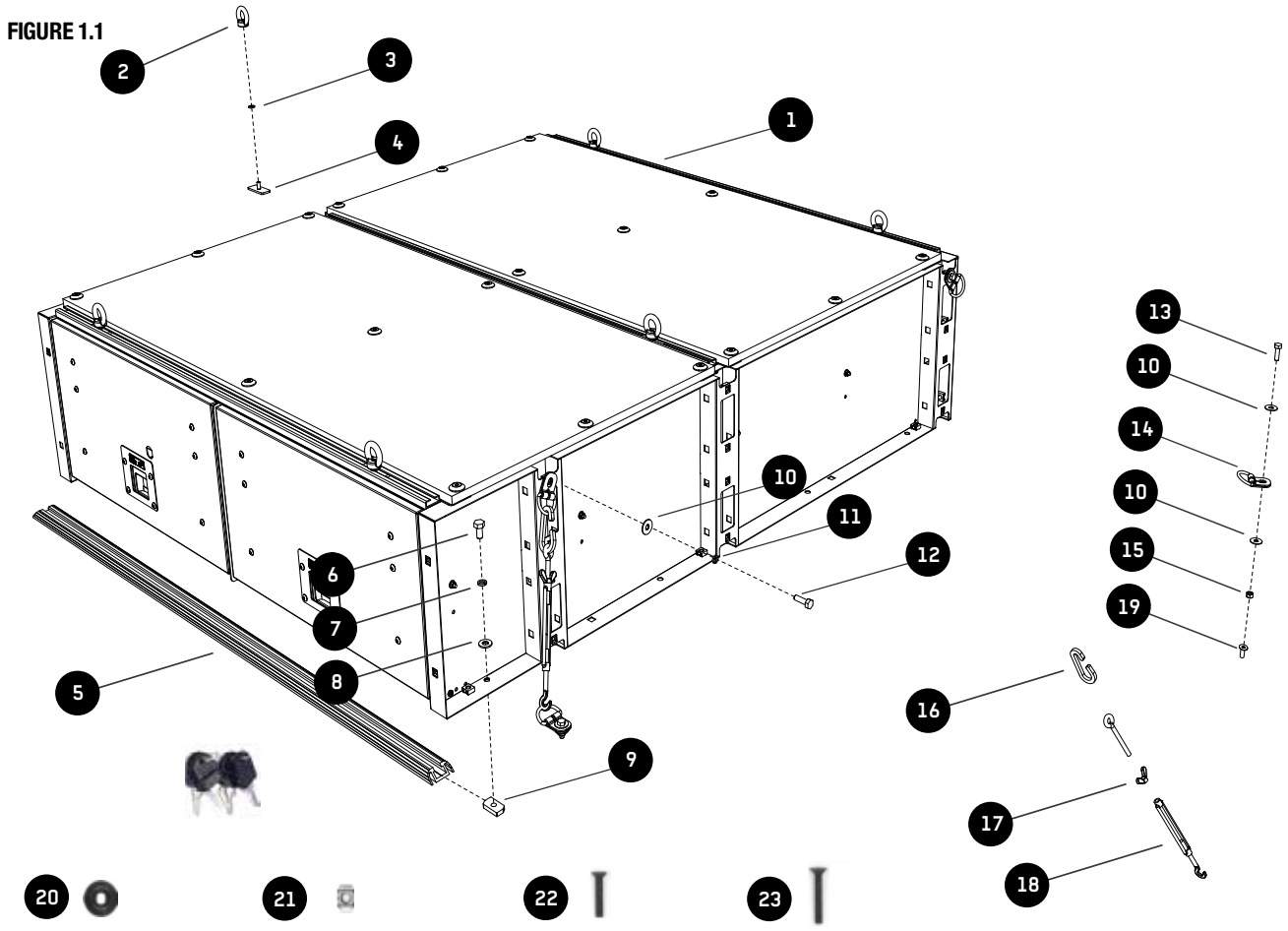

 © 2020 FRONT RUNNER VEHICLE OUTFITTERS

2 FIT AND SECURE

2.1

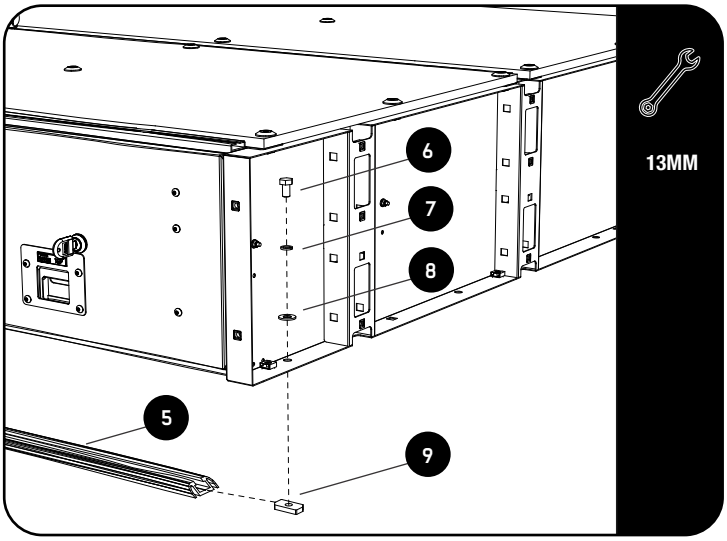

Slide 2 channel nuts (Item 9) into the track (Item 5). Center the track under the drawer and secure with the fasteners as shown.

2.2

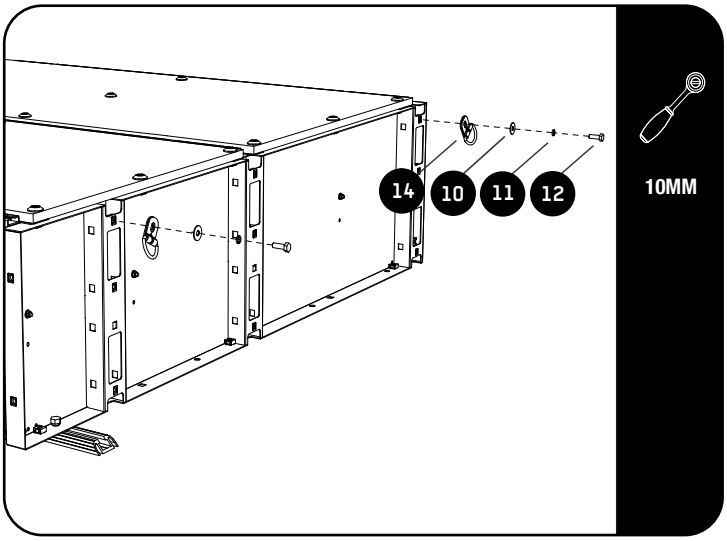

Secure the four D-Rings (Item14) on both sides of the drawer using the fasteners shown.

2.3

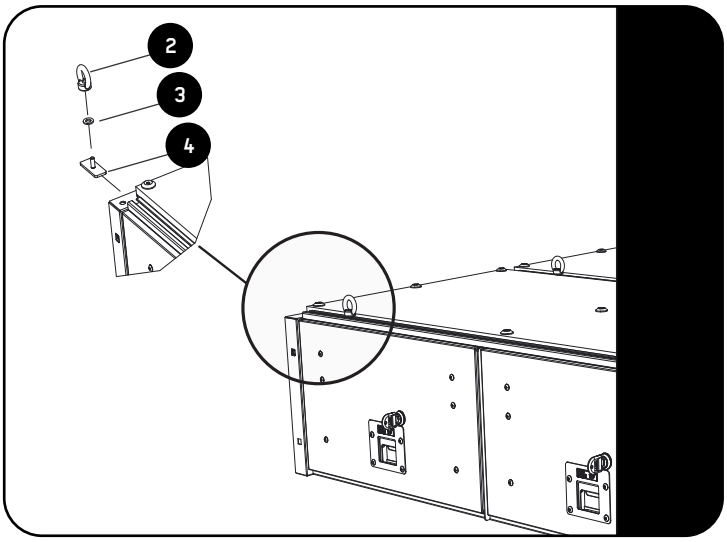

Assemble the eye-nuts (Item 2) with a M6 nylon washer (Item 3) and a stud plate (Item 4) and slide them into place.

© 2020 FRONT RUNNER VEHICLE OUTFITTERS

2 FIT AND SECURE

2.4

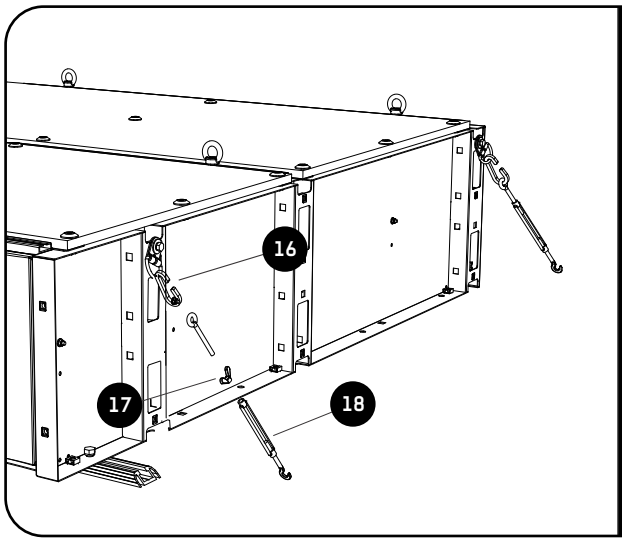

Assemble each of the 4 turnbuckles (Item 18) with a wing nut (Item 17) as shown. The wing nut will be used to lock the turnbuckles after they have been set.

2.5

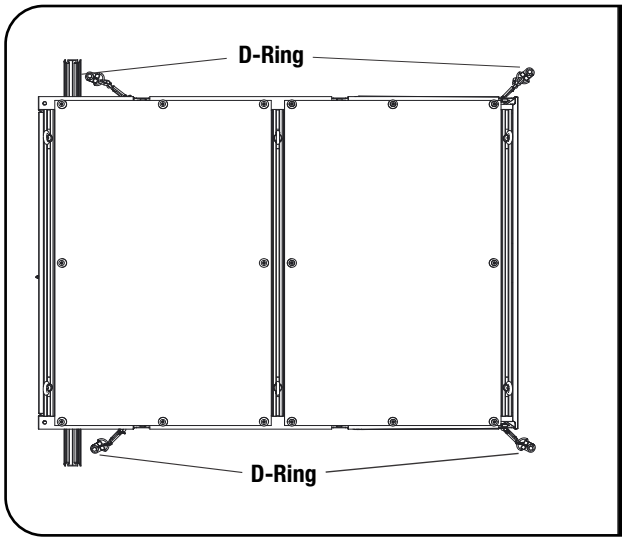

Place the drawer into the vehicle and center. Making sure the turnbuckles are pulling outward to prevent the drawer from moving after it has been secured.

If the load bed has tie down points that are positioned as mentioned above, no additional points will be needed. Move on to step 2.6.

If the load bed does not have tie down points, drill 6.5mm holes using the D-rings and turnbuckles as a guide.

Take care when drilling and check for any obstructions beneath the load bed before drilling.

2.6

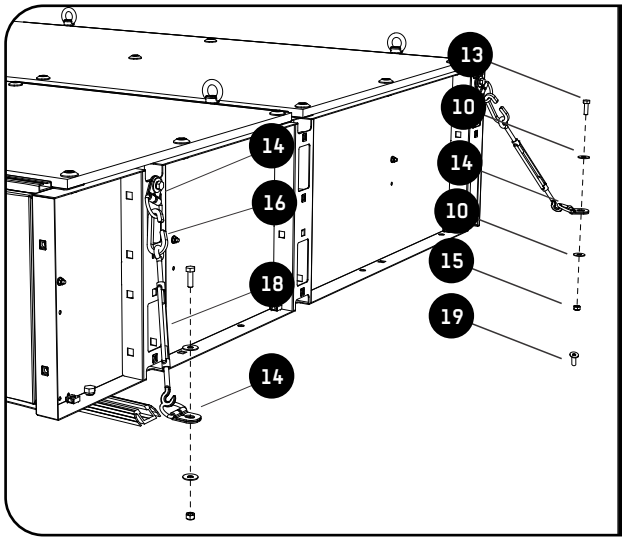

Secure the D-rings to the vehicle with the fasteners shown.

Hook the 60mm Carabiner (Item 16) onto the D-rings (Item 14) on the drawers upright. Place the turnbuckles (Item 18) on the other side of the 60mm Carabiner and hook it into the D-rings (Item 14) that are secured to the vehicle.

Secure the drawer by tensioning the turnbuckles until there is no more movement on the drawer. Make sure the Drawer System remains in position when doing this.

Lock the turnbuckles with the wing nuts. Do this by tightening the wing nuts up to the turnbuckles.
Refer to diagram 2.4

 © 2020 FRONT RUNNER VEHICLE OUTFITTERS

3 FINISH

Congratulations! You did it. Take a step back and admire your work!

4 INSTALL OTHER VEHICLE AND RACK ACCESSORIES

Now's the time to visit your favorite Front Runner Dealer in person or online.

Be sure to tag us. We love to see our gear in action! #FrontRunnerOutfitters #BornToRoam

Share your adventures on:

© 2020 FRONT RUNNER VEHICLE OUTFITTERS