FRONT RUNNER
VEHICLE OUTFITTERS

UNIVERSAL DRAWER MEDIUM SUV

ENG

SSDR005

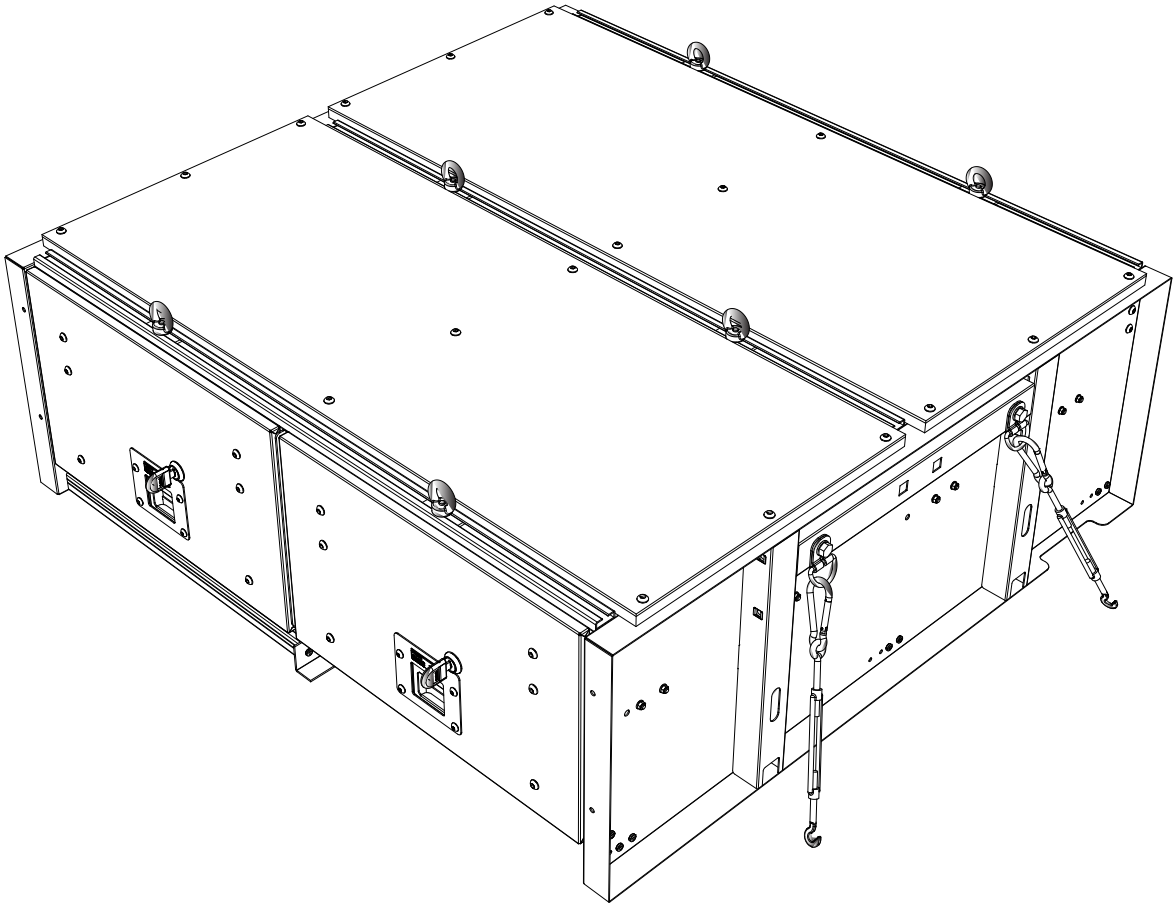

READ ME !

Thank you for purchasing Front Runner Universal Drawers System.

Before you start, take a moment to familiarize yourself with the Fitting Instructions and the components received.

Refer to Page 2 for a list of all the components, quantities and tools required.

IMPORTANT WARNING!

IT IS CRITICAL THAT ALL FRONT RUNNER PRODUCTS BE PROPERLY AND SECURELY ASSEMBLED AND ATTACHED TO YOUR VEHICLE. IMPROPER ATTACHMENT COULD RESULT IN AN AUTOMOBILE ACCIDENT, AND COULD CAUSE SERIOUS BODILY INJURY OR DEATH. YOU ARE RESPONSIBLE FOR ASSEMBLING AND SECURING ALL FRONT RUNNER PRODUCTS TO YOUR VEHICLE, CHECKING THE ATTACHMENTS PRIOR TO USE, AND PERIODICALLY INSPECTING THE PRODUCTS FOR ADJUSTMENT, WEAR AND DAMAGE. THEREFORE, YOU MUST READ AND UNDERSTAND ALL OF THE INSTRUCTIONS AND PRECAUTIONS SUPPLIED WITH YOUR FRONT RUNNER PRODUCT PRIOR TO INSTALLATION OR USE. IF YOU DO NOT UNDERSTAND ALL OF THE INSTRUCTIONS AND CAUTIONS, OR IF YOU HAVE NO MECHANICAL EXPERIENCE AND ARE NOT THOROUGHLY FAMILIAR WITH THE INSTALLATION PROCEDURES, YOU SHOULD HAVE THE PRODUCT INSTALLED BY A PROFESSIONAL INSTALLER OR OTHER QUALIFIED PERSONNEL.

NOTE: Front Runner will not be responsible for any damage caused by the failure to install the product according to these instructions.

Please call us if you have any questions about the installation of this product.

© 2020 FRONT RUNNER VEHICLE OUTFITTERS

1 GET ORGANIZED

IN THE BOX

1	1 X	Universal Drawer Medium SUV
	2 X	Set Of Keys
2	6 X	Eye Nut
3	6 X	M8 Nylon Washer
4	6 X	Stud Plate
5	4 X	Carabiner Hook 60mm
6	4 X	M6 Wing Nut
7	4 X	Turnbuckle
8	4 X	M6 x 20 Hex Bolt
9	8 X	M6 x 19 x 1SS Flat Washer
10	8 X	M8 D-Ring
11	4 X	M6 Nyloc Nut
12	4 X	M8 x 16 x 1.6 Flat Washer
13	4 X	M8 x 16 Hex Bolt

TOOLS NEEDED

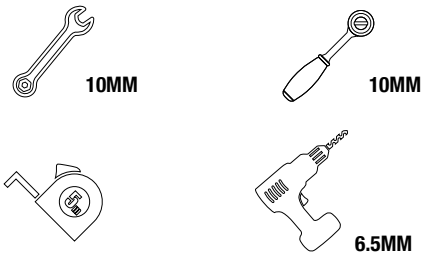

FIGURE 1.1

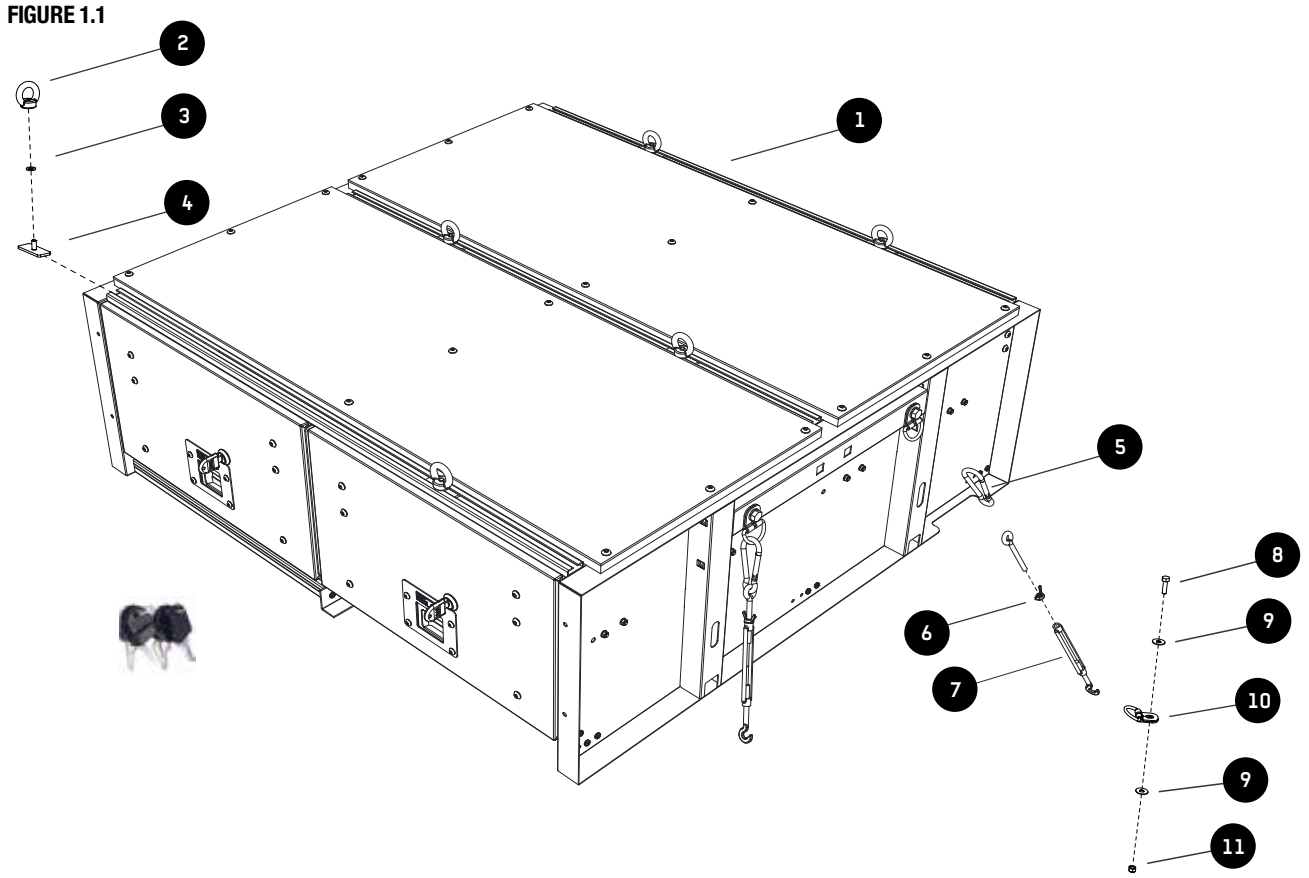

 © 2020 FRONT RUNNER VEHICLE OUTFITTERS

2 FIT AND SECURE

2.1

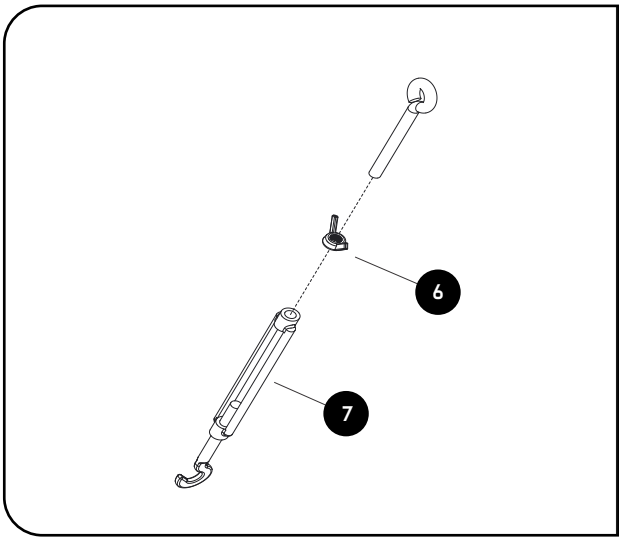

Assemble each of the 4 turnbuckles (Item 7) with a wing nut (Item 6) as shown. The wing nut will be used to lock the Turnbuckles after they have been set.

2.2

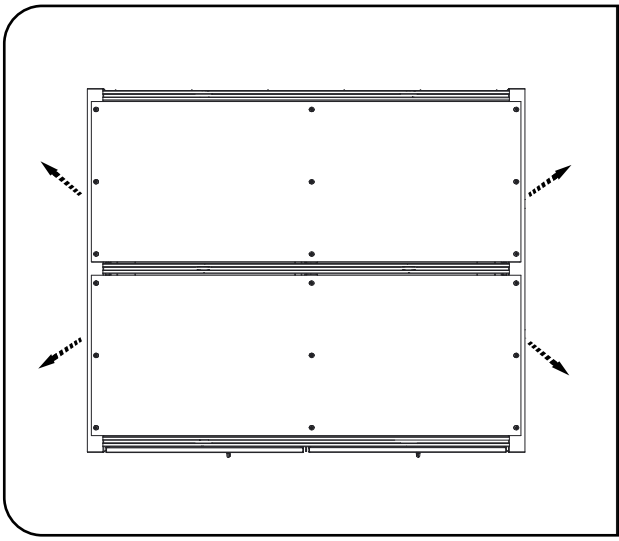

Place the Drawer System in the vehicle and center it. Make sure the Turnbuckles will be pulling outward to the existing mounting points in the vehicle to prevent it from moving after it has been secured.

2.3

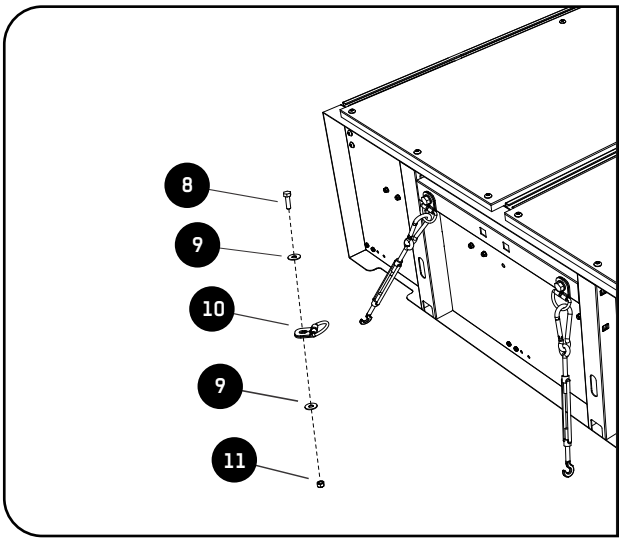

If your vehicle does not have Tie-Down points you can use the D-Rings (Item 10) supplied.

Position the D-Rings so that the Turnbuckles will pull outward to prevent the Drawer System from moving after it has been secured.

Mark the position of the D-Rings and drill 6.5mm holes.

Secure the D-Rings using M6 x 20 Hex Bolts, M6 x 19 x 1SS Flat Washers and M6 Nyloc Nuts (Items 8, 9 & 11)

© 2020 FRONT RUNNER VEHICLE OUTFITTERS

2 FIT AND SECURE

2.4

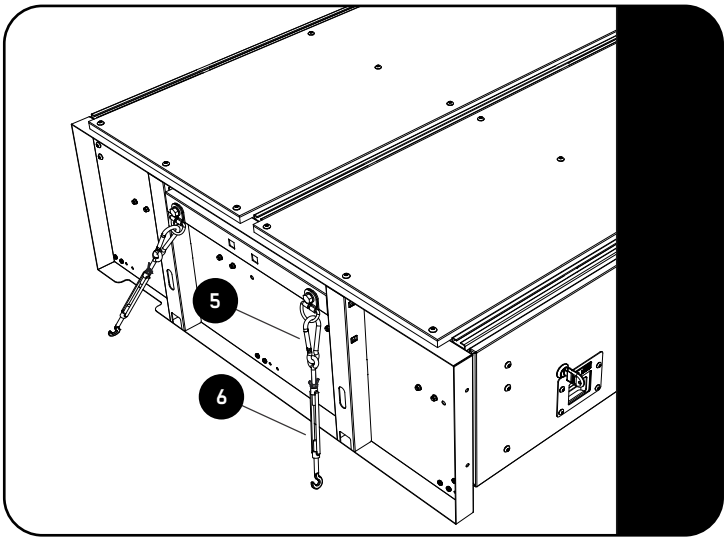

Connect the 60mm Laser Cut Carabiner (Item 5) onto the D-rings on the drawers upright.

Connect the Turnbuckles (Item 6) on the other side of the 60mm Laser Cut Carabiner and hook it into the existing tie-downs that are fitted to the vehicle.

Secure the drawer by tensioning the Turnbuckles until there is no more movement on the drawer. Make sure the drawer stays in position when doing this.

Lock the Turnbuckles with the wing nuts. Do this by tightening the wing nuts up to the turnbuckles.

2.5

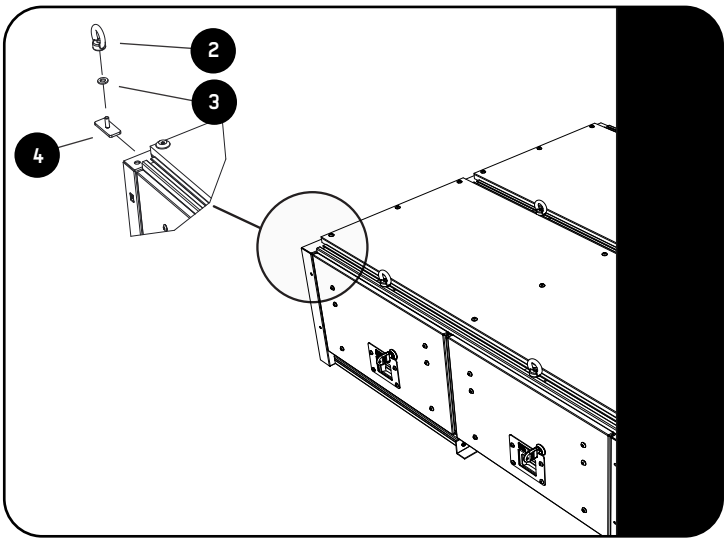

Assemble the Eye-Nuts with a M6 Nylon Washer and a Stud Plate (Items 2, 3 & 4) and slide them into the extrusion.

 © 2020 FRONT RUNNER VEHICLE OUTFITTERS

4 Front Runner will not be responsible for any damage caused by the failure to install the product according to these instructions. Please call us if you have any questions about the installation of this product.

5 INSTALL OTHER VEHICLE AND RACK ACCESSORIES

Now's the time to visit your favorite Front Runner Dealer in person or Online.

Be sure to tag us. We love to see our gear in action! #FrontRunnerOutfitters #BornToRoam

Share your adventures on:

© 2020 FRONT RUNNER VEHICLE OUTFITTERS