FRONT RUNNER
VEHICLE OUTFITTERS

SUV ASYMMETRIC DRAWERS / LARGE

ENG

SSDR002

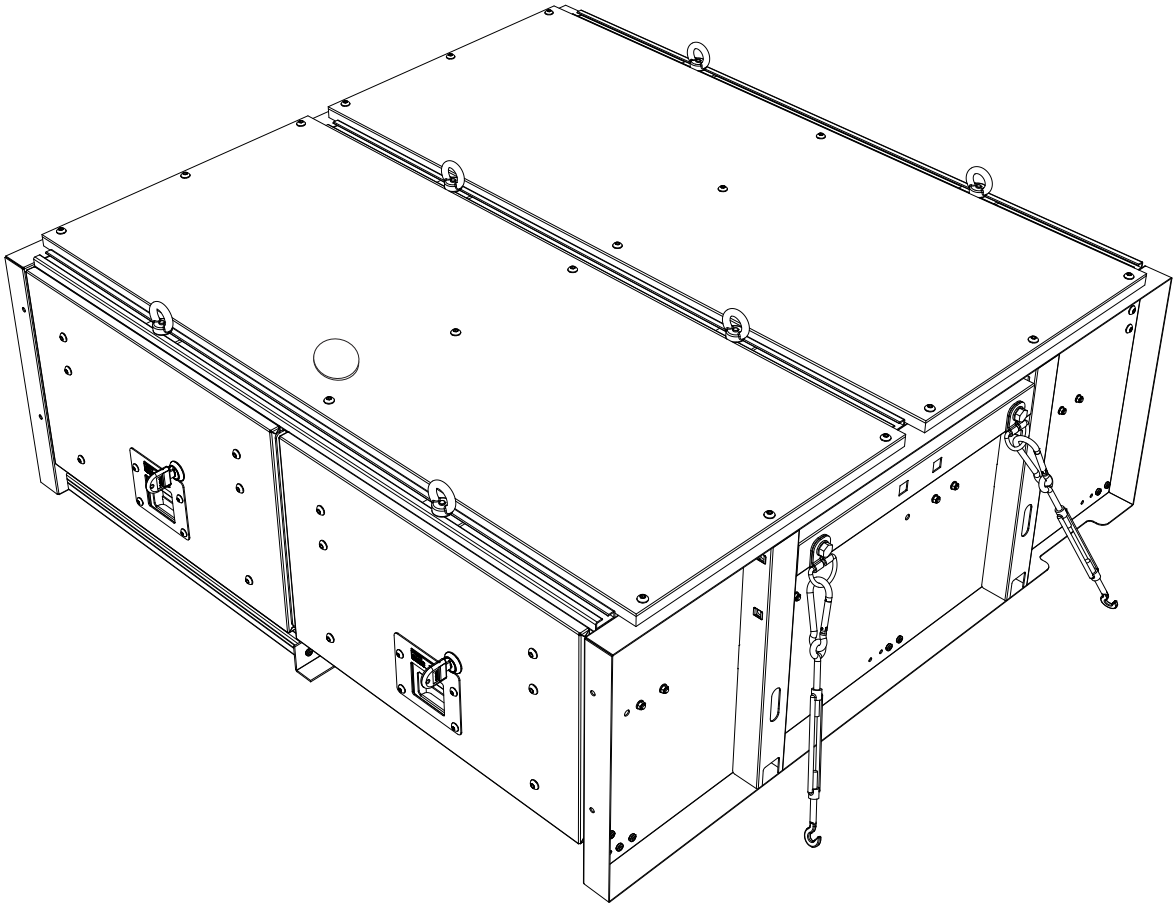

READ ME !

Thank you for purchasing a Front Runner Universal Drawer.

Before you start, take a moment to familiarize yourself with the Fitting Instructions and the components received.

Refer to Page 2 for a list of all the components, quantities and tools required.

IMPORTANT WARNING!

IT IS CRITICAL THAT ALL FRONT RUNNER PRODUCTS BE PROPERLY AND SECURELY ASSEMBLED AND ATTACHED TO YOUR VEHICLE. IMPROPER ATTACHMENT COULD RESULT IN AN AUTOMOBILE ACCIDENT, AND COULD CAUSE SERIOUS BODILY INJURY OR DEATH. YOU ARE RESPONSIBLE FOR ASSEMBLING AND SECURING ALL FRONT RUNNER PRODUCTS TO YOUR VEHICLE, CHECKING THE ATTACHMENTS PRIOR TO USE, AND PERIODICALLY INSPECTING THE PRODUCTS FOR ADJUSTMENT, WEAR AND DAMAGE. THEREFORE, YOU MUST READ AND UNDERSTAND ALL OF THE INSTRUCTIONS AND PRECAUTIONS SUPPLIED WITH YOUR FRONT RUNNER PRODUCT PRIOR TO INSTALLATION OR USE. IF YOU DO NOT UNDERSTAND ALL OF THE INSTRUCTIONS AND CAUTIONS, OR IF YOU HAVE NO MECHANICAL EXPERIENCE AND ARE NOT THOROUGHLY FAMILIAR WITH THE INSTALLATION PROCEDURES, YOU SHOULD HAVE THE PRODUCT INSTALLED BY A PROFESSIONAL INSTALLER OR OTHER QUALIFIED PERSONNEL.

NOTE: Front Runner will not be responsible for any damage caused by the failure to install the product according to these instructions.
Please call us if you have any questions about the installation of this product.

© 2020 FRONT RUNNER VEHICLE OUTFITTERS

1 GET ORGANIZED

IN THE BOX

1	1 X	Universal Drawer Large Pick-up
	2 X	Set Of Keys
2	6 X	Eye Nut
3	6 X	M8 Nylon Washer
4	6 X	Stud Plate
5	4 X	Carabiner
6	4 X	M6 Wing Nut
7	4 X	Turnbuckle

TOOLS NEEDED

10MM
13MM

10MM

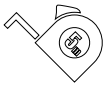

FIGURE 1.1

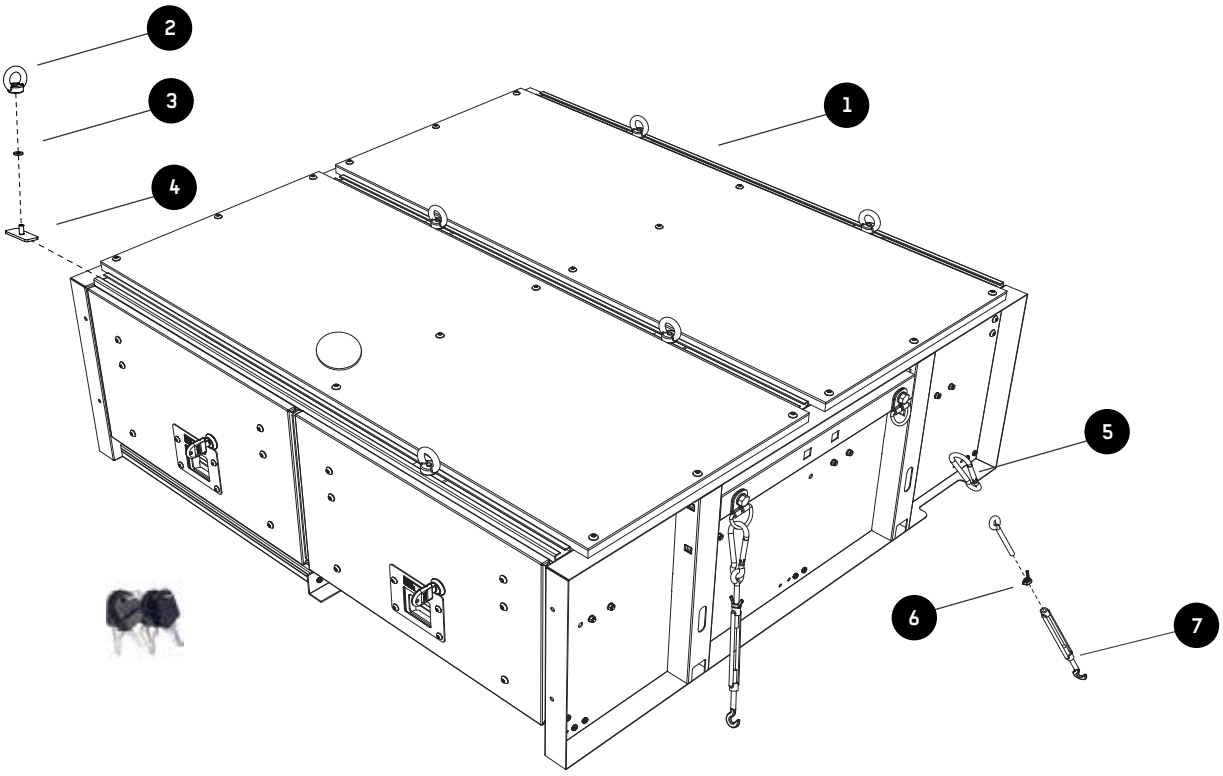

 © 2020 FRONT RUNNER VEHICLE OUTFITTERS

2 FIT AND SECURE

2.1

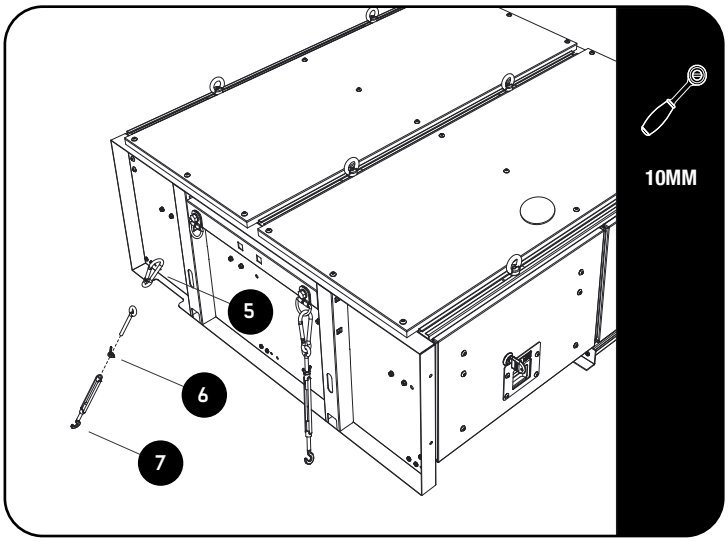

Assemble each of the 4 turnbuckles (item 12) with a wing nut (item 10) as shown. The wing nut will be used to lock the turnbuckles after they have been set.

2.2

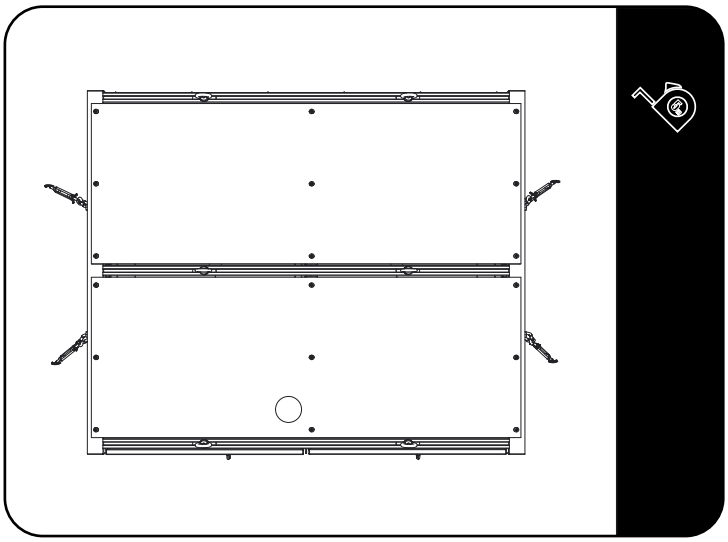

Place the drawer in the vehicle and position as desired. Making sure the turnbuckles are pulling outward to prevent the drawer from moving after it has been secured.

2.3

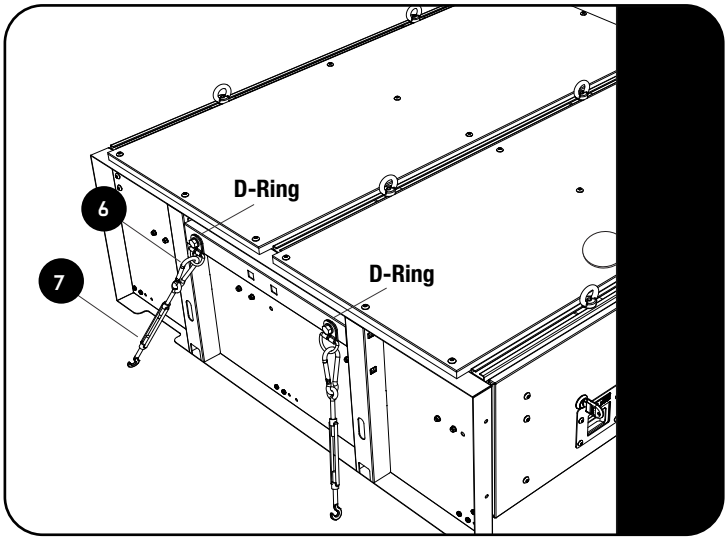

Connect the C-hooks (item 6) onto the D-rings on the drawers upright. Connect the turnbuckles (item 7) on the other side of the C-hooks and hook it into the tie-down that are fitted to the vehicle.

Secure the drawer by tensioning the turnbuckles until there is no more movement on the drawer. Make sure the drawer stays in position when doing this.

Lock the turnbuckles with the wing nuts. Do this by tightening the wing nuts up to the turnbuckles.
Refer to diagram 2.1

 © 2020 FRONT RUNNER VEHICLE OUTFITTERS

2 FIT AND SECURE

2.4

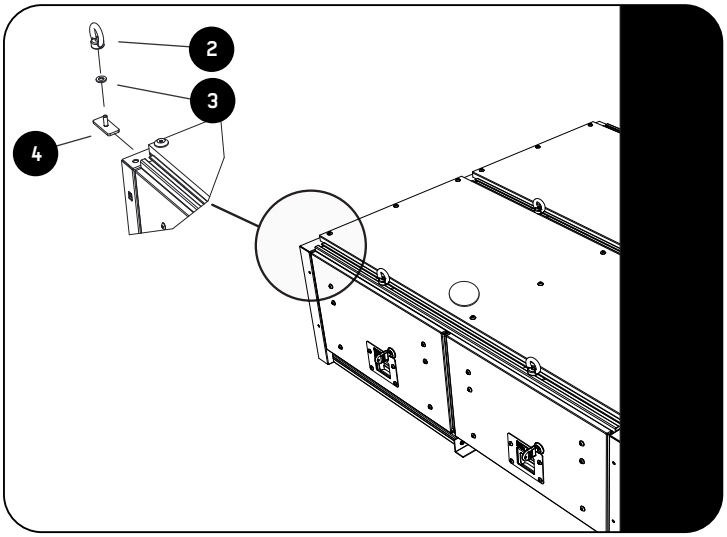

Assemble the eye-nuts (item 2) with a M8 nylon washer (item 3) and a stud plate (item 4) and slide them into place.

3 FINISH

Congratulations! You did it. Take a step back and admire your work!

4 INSTALL OTHER VEHICLE AND RACK ACCESSORIES

Now's the time to visit your favorite Front Runner Dealer in person or online.

Be sure to tag us. We love to see our gear in action! #FrontRunnerOutfitters #BornToRoam

Share your adventures on:

© 2020 FRONT RUNNER VEHICLE OUTFITTERS