FRONT RUNNER
VEHICLE OUTFITTERS

FRONT FACE PLATE SET FOR PICK-UP DRAWERS

ENG

SSCA049

10 min

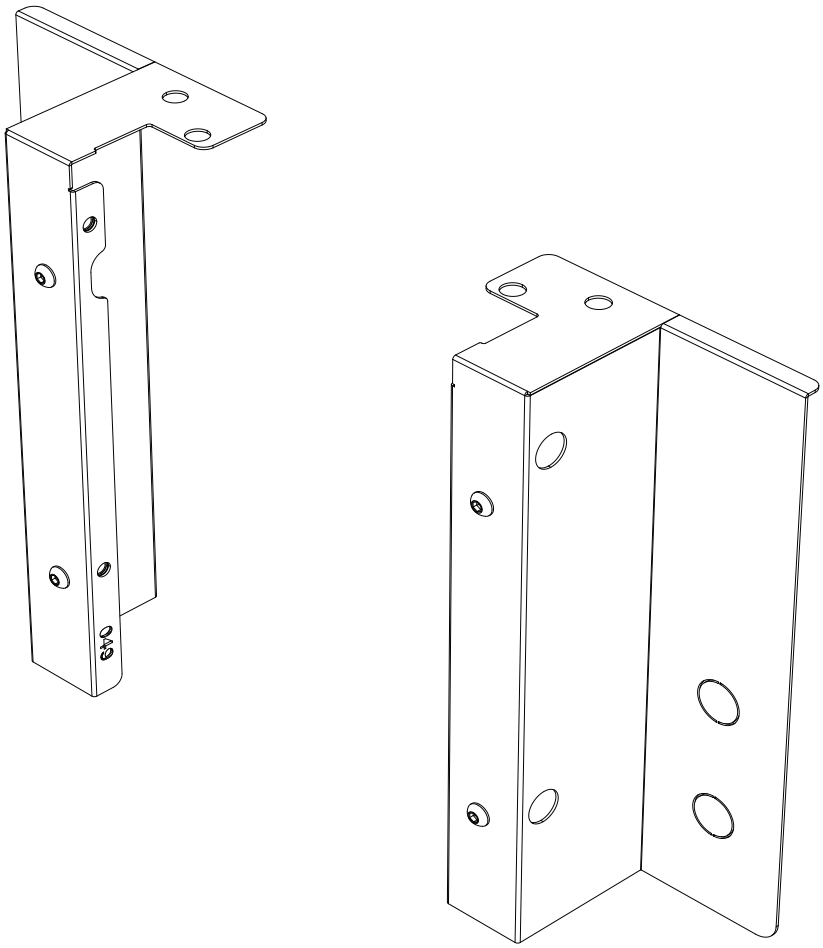

Thank you for purchasing a Front Runner Front Face Plate Set For Pick-Up Drawers.

Before you start, take a moment to familiarize yourself with this Fitting Intruction and the components received.

Refer to Page 2 for a list of all the components, quantities and tools required.

IMPORTANT WARNING! ⚠

IT IS CRITICAL THAT ALL FRONT RUNNER PRODUCTS BE PROPERLY AND SECURELY ASSEMBLED AND ATTACHED TO YOUR VEHICLE.

IMPROPER ATTACHMENT COULD RESULT IN AN AUTOMOBILE ACCIDENT, AND COULD CAUSE SERIOUS BODILY INJURY OR DEATH.

YOU ARE RESPONSIBLE FOR ASSEMBLING AND SECURING ALL FRONT RUNNER PRODUCTS TO YOUR VEHICLE. CHECKING THE ATTACHMENTS PRIOR TO USE, AND PERIODICALLY INSPECTING THE PRODUCTS FOR ADJUSTMENT, WEAR AND DAMAGE.

THEREFORE YOU MUST READ AND UNDERSTAND ALL OF THE INSTRUCTIONS AND PRECAUTIONS SUPPLIED WITH YOUR FRONT RUNNER PRODUCT PRIOR TO INSTALLATION OR USE.

IF YOU DO NOT UNDERSTAND ALL OF THE INSTRUCTIONS AND CAUTIONS, OR IF YOU HAVE NO MECHANICAL EXPERIENCE AND ARE NOT THOROUGHLY FAMILIAR WITH THE INSTALLATION PROCEDURES,

YOU SHOULD HAVE THE PRODUCT INSTALLED BY A PROFESSIONAL INSTALLER OR OTHER QUALIFIED PERSONNEL.

© COPYRIGHT 2016 FRONT RUNNER VEHICLE OUTFITTERS

1 GET ORGANIZED

Here is what you are looking at for SSCA049

IN THE BOX

1	1 X	Front Face Left
2	1 X	Front Face Right
3	4 X	M6 x 16 Button Head
4	4 X	M6 Flat Washer
5	4 X	M6 Nyloc

TOOLS NEEDED

FIGURE 1.1

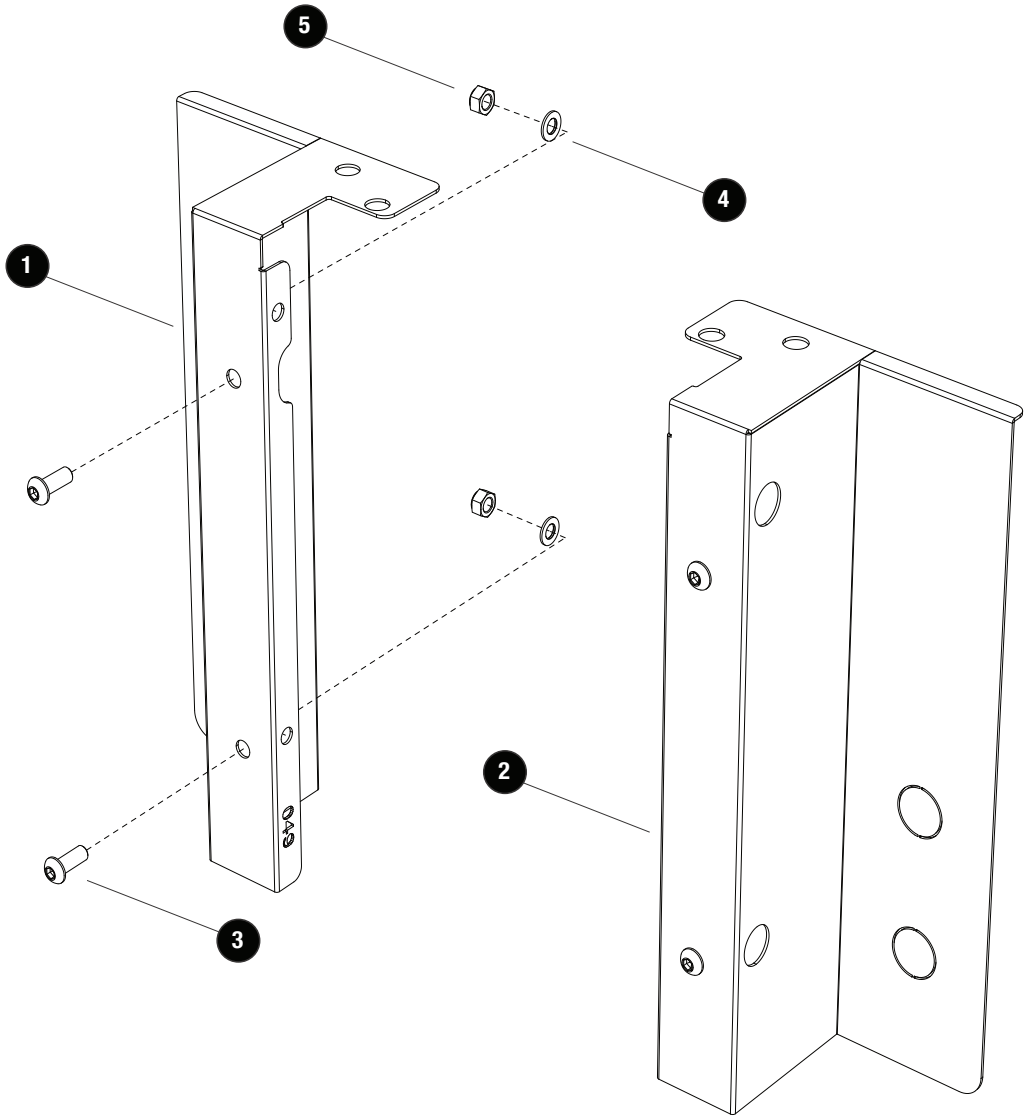

 © COPYRIGHT 2016 FRONT RUNNER VEHICLE OUTFITTERS

2 FIT AND SECURE

FIT AND SECURE SSCA049 TO SSDR010

2.1

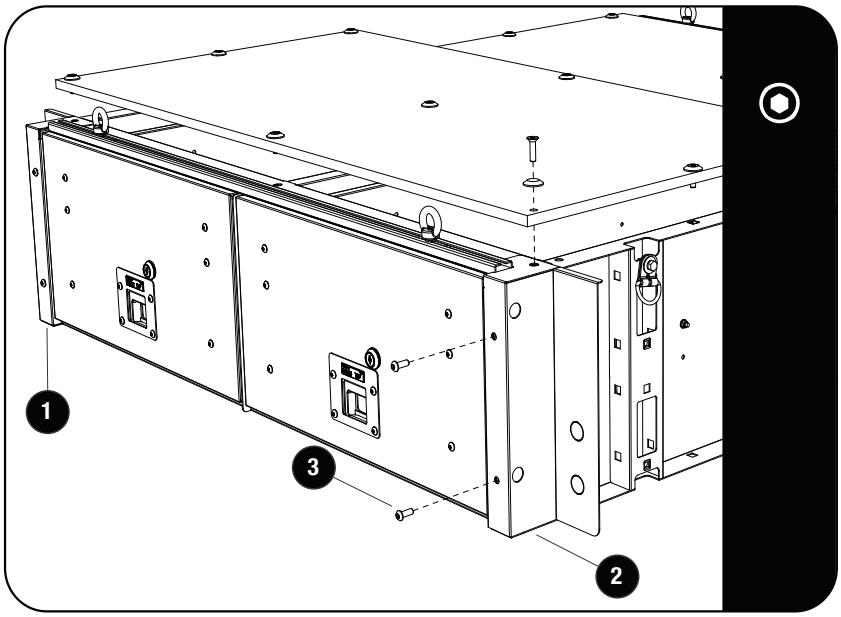

Loosen the drawer top as shown. Secure the front faces (item 1 & 2) with item 3. Refit the drawer top.

FIT AND SECURE SSCA049 TO SSWO008

2.2

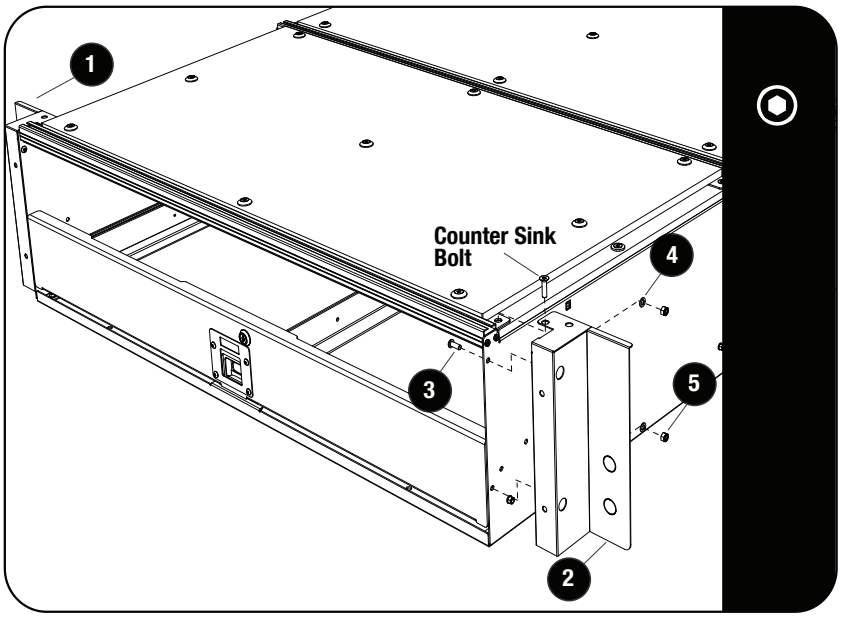

Loosen the counter sink bolt as shown. Secure the front faces (item 1 & 2) with item 3, 4 and 5. Refit the counter sink bolt.

© COPYRIGHT 2016 FRONT RUNNER VEHICLE OUTFITTERS

3 COMPLESION

3.1

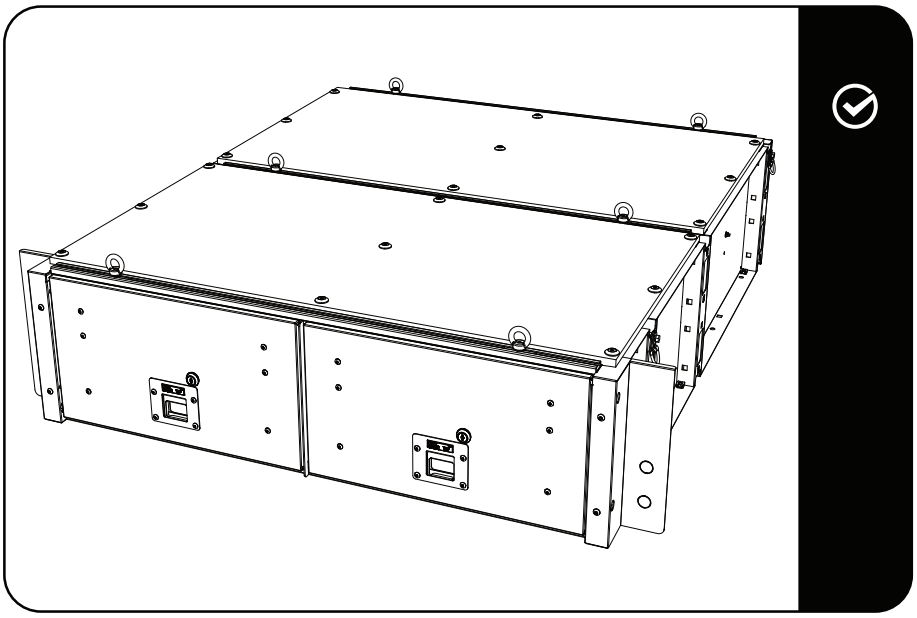

3.2

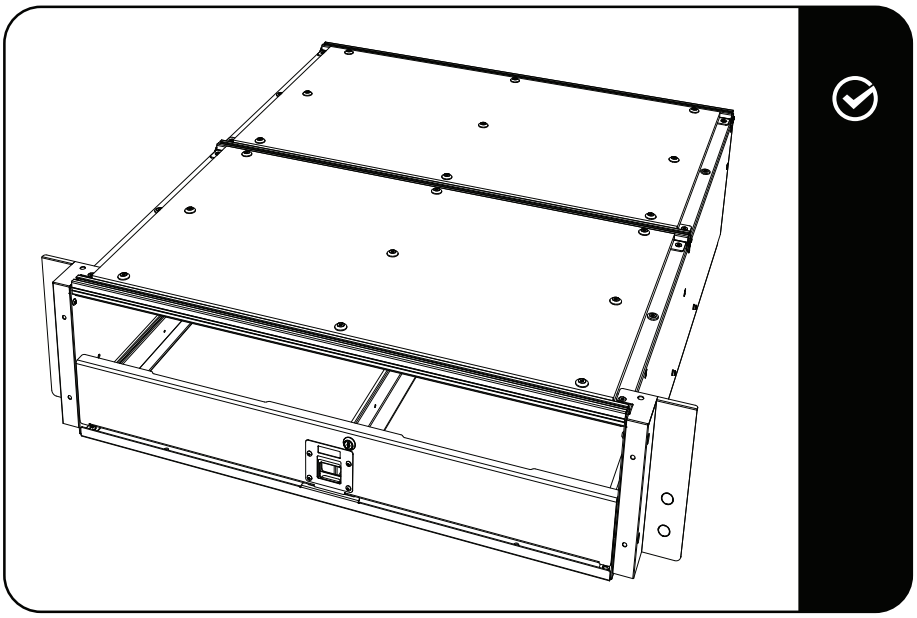

4 INSTALL OTHER VEHICLE AND RACK ACCESSORIES

Now's the time to visit your favorite Front Runner Dealer in person or online.

© COPYRIGHT 2016 FRONT RUNNER VEHICLE OUTFITTERS